AMBASSADOR 2001

OWNER'S MANUAL QUESTIONNAIRE

Your suggestions are very important to us and we are continually striving to improve the quality of our manuals. After becoming familiar with your new recreational vehicle and the accompanying manual, please take the time to answer the following questions. When you are finished please return it, postage paid, to our Technical Publications Department. Feel free to attach an additional page if you desire.

1. Is this your first recreational vehicle? YES / NO

2. Was the overall appearance and lay-out of this manual what you expected to see in your new recreational vehicle?

_____
_____
_____
_____
_____

3. Was the information within this manual helpful in acquainting you with your new recreational vehicle? If not please address any area(s) we need to expand or improve on.

_____
_____
_____
_____
_____

4. Were the operating instructions clearly written, and were you able to follow the steps without any difficulty?

_____
_____
_____
_____
_____

5. Is there any additional information you would like to see incorporated within the owner's manual?

_____
_____
_____
_____
_____

NAME: _____ **PHONE:** (_____)_____

ADDRESS: _____

CUT ALONG DOTTED LINE

FOLD

FOLD

Cut Along
Dotted Line

AMBASSADOR

SECTIONS

SIGNS

This sign indicates a NOTE.

This sign indicates a WARNING or a CAUTION with additional information attached.

This sign indicates INSPECTION is required.

This sign indicates ASSEMBLY/INSTALLATION or DISASSEMBLY/REMOVAL is necessary.

This sign indicates the specified part requires OIL/LUBRICATION.

This sign indicates a reference to the Warranty INFORMATION FILE located within the grey box inside the motorhome.

Product information and specifications are shown herein as of the time of printing. Holiday Rambler reserves the right to change product specifications, designs and standard equipment without notice and without incurring obligation.

AMBASSADOR

SECTION 1
INFORMATION & WARRANTY

1

INTRODUCTION

This section contains warranty information and knowledge for the operation and care of the motorhome. Not all information may be applicable to your model of motorhome. More detailed information with **CAUTION or WARNING** instructions, other than what is found in this chapter, can be found in the manufacturer's owner manuals located in the owner information box.

In time you will develop a knack for spotting wonderful little roadside locations by turning off the main highway and exploring. There are many modern recreational vehicle parks (including state, county and federal parks) with good facilities where you can obtain hook-ups for electrical, water and sewage connections. Directories are published which describe these parks and the availability of services and hook-ups. On overnight or weekend trips, chances are you will probably not fill up the sewage holding tanks, deplete the water or LP-Gas supply, or run down the batteries which supply the living area with 12 Volt DC current. On longer trips, when you have stayed where sewer connections and utility hook-ups were not available, it will be necessary to stop occasionally to empty the holding tanks and replenish the water and LP-Gas supply.

Many gas stations have installed sanitary dumping stations. Publications are available which list these dumping stations. When stopped for the night the Holiday Rambler motorhome is built to be safely parked in any spot that is relatively level and where the ground is firm. Try to pick as level a parking spot as possible. Your facilities are with you and the motorhome is fully self-contained.

The safety alert symbols of **CAUTION** or **WARNING** are "Personal Safety Instructions." It is important to thoroughly read and understand these safety instructions where the symbols are displayed throughout the manual. Failure to comply with specific instructions may result in personal injury or death. Many instructions are required by National Safety Associations.

CUSTOMER RELATIONS

Only by ensuring your confidence and satisfaction with our products and services can we have continued success as a manufacturer of motorhomes. We believe a good relationship with our customers is just as important as improving the technical excellence of our products. Your authorized dealer is pleased to help you with instructions about your motorhome and to offer service when you need it. If problems remain after you have consulted your dealer you are invited to contact our Consumer Affairs Department. Please have all pertinent information (serial numbers, model number, etc.) when calling. We will work with the dealer and see that every attempt to resolve the matter is made.

Holiday Rambler Consumer Affairs Department
606 Nelson's Parkway
Wakarusa, Indiana 46573
800-522-7519 or 877-466-6226

REPORTING SAFETY DEFECTS

If you believe that your motorhome has a defect which could cause a crash or could cause injury or death, you should immediately inform the National Highway Traffic Safety Administration (NHTSA) in addition to notifying Holiday Rambler. If NHTSA receives similar complaints, it may open an investigation, and if it finds that a safety defect exists in a group of motorhomes, it may order a recall or remedy campaign. However, NHTSA cannot become involved in individual problems between you, your dealer or Holiday Rambler. To contact NHTSA you may either call the Auto Safety Hot line toll-free at 1-800-424-9393 (or 1-202-366-0123 in Washington DC area) or write to:

NHTSA
400 Seventh Street
US Department of Transportation
Washington, DC 20590

TAKING DELIVERY

Holiday Rambler Responsibilities

Your motorhome has been manufactured to the highest quality and standards by factory trained personnel. Quality inspections are performed throughout the manufacturing process of your motorhome. The motorhome has been carefully and almost completely hand assembled in our factory. Prior to the motorhome arriving at the dealership, all systems have been carefully tested and inspected to ensure optimum performance. The necessary forms and required manuals have been placed in the motorhome at the time of shipment to the dealership.

Dealer Responsibilities

The dealer must perform additional pre-delivery inspections and system checks, assist in the customer's understanding of the Limited Warranty and assist in completing any necessary forms. They must do a customer orientation to the motorhome, its systems, components and their operation.

The dealer should also ensure the customer receives a complete Owner's Packet with warranty cards and registrations for the motorhome and for separately warranted products, including detailed operating and maintenance instructions. The dealer is responsible for performing a review of the Limited Warranty provisions with the customer, while stressing the importance of mailing warranty cards and registrations to the manufacturers within the prescribed time limit to avoid loss of warranty coverage. They must assist the customer in completing these forms and locating serial numbers. They should request that the customer reads all warranty information when possible and explain any provision not clearly understood.

The dealer should instruct the customer on how to obtain local and out-of-town service on the motorhome and its various individual warranted components, whether the service is warrantable or out of warranty.

Customer Responsibilities

As a new motorhome owner you are responsible for regular and proper maintenance. This will help you prevent conditions arising from neglect that are not covered by your Holiday Rambler Limited Warranty. Maintenance services should be performed in accordance with this Owner's Manual, and any other applicable manuals. As the owner, it is your responsibility and obligation to return the motorhome to an authorized dealer for repairs and service (See the Limited Warranty). Since the authorized dealer where you purchased your new motorhome is responsible for its proper servicing before delivery, and has an interest in your continued satisfaction, we recommend that Inspection, Warranty and Maintenance Services be performed by the dealership. We suggest that you take your new motorhome on a weekend shakedown before leaving on an extended trip.

WARRANTY INFORMATION FILE

In addition to this Owner's Manual you will find a Warranty Information File in your unit. This file contains valuable documents about your motorhome systems and equipment. Many of the component manufacturer's warranty registration cards can be found in the box. They will need to be filled out and mailed. Be sure you read and understand all the information in this file to help you safely operate, maintain and troubleshoot those items.

HOLIDAY RAMBLER FINISH

Because no two trees look alike, authentic woods vary in color and character markings such as streaks, knots and grain patterns. Since the stains may attach differently to these grain patterns, some natural light and dark areas may result. The beauty lies in these natural variations of color and grain that give each cabinet its own individual charm.

The beauty of these products is protected with a furniture-quality exterior finish. After a period of time, there may be minimal changes in the finish color as it ages in its surrounding conditions. This is an inherent characteristic of this particular finish, and the natural aging process adds to the unique appearance of the cabinetry. Due to the minor differences in tone, it may not be possible to match the finish color of existing cabinets exactly when replacing doors or adding additional cabinets at a later date.

Holiday Rambler

The foregoing is not a warning. See Holiday Rambler's Limited Warranty or call Holiday Rambler at (877) 466-6226 for warranty information and limitations.

SERVICE SUGGESTIONS

Know when to take your motorhome in for service. Give some thought to the appointment time. There are several things to consider when selecting a time for service. Location of the service center and the time of year can be a major issue. Monday and Friday are busy days for most dealers. Therefore, it makes sense to make a mid-week appointment whenever possible. Ask your dealer if additional time is needed for check in and completion of paperwork.

Prepare for the Appointment

If you're having warranty work done, be sure to have your warranty registration papers with you. All work to be performed may not be covered by the warranty; be sure to discuss additional charges with the service manager. Keep a maintenance log of your motorhome service history. This can often provide a clue to the current problem.

Prepare a List

Make a written list of specific repairs needed. It is important the service manager be aware of all previous work which has been done on your motorhome. For example: if the motorhome has been repaired due to an accident. While this may not seem important, it could have a significant effect on the dealer's diagnosis of a problem.

Be Reasonable With Your Requests

Don't leave a list of 20 items to be serviced and expect to have your motorhome back by five o'clock. If you list a number of items, and you must have your motorhome back by the end of the day, discuss the situation with the service manager and list items in order of priority. Some items may not be able to be repaired due to work loads or parts availability. Expect to make a second appointment for work not completed or for the long, drawn-out repair item.

No Looking Over the Technicians Shoulder

Please don't be offended when you are told you cannot watch the work being done. Many service area insurance requirements forbid the admission of customers into the service work area.

Inspect the Work Properly

Check out the service or repair job when you pick up your motorhome and notify the service manager of any dissatisfaction. If circumstances prevent returning for immediate corrective work, make an appointment as soon as possible.

FOR YOUR OWN REFERENCE

OWNER'S RECORD - SERIAL NUMBERS

Refer to the Manufacturer's individual Owner's Manuals for serial number locations that are not listed below.

Motorhome Serial Number _____

Motorhome Federal Vehicle Identification Number (VIN) _____

Door Key Number _____

Range Model & Serial Number _____
(Located under top burner plate)

Microwave Model & Serial Number _____
(Located behind door on case)

Refrigerator Model & Serial Number _____
(Located inside refrigerator compartment)

Generator Model & Serial Number _____
(Located in outside compartment on generator)

Roof Air Conditioner Model & Serial Number _____
(Located under top cover on air conditioner)

FOR YOUR OWN REFERENCE

OWNER'S RECORD - PERSONAL PROPERTY

Item	Serial Number	Value

FOR YOUR OWN REFERENCE

OWNER'S RECORD - INSURANCE

Company: _____

_____

Policy #: _____

_____

Agent's Name & Address: _____

_____

Business Phone #: _____

_____

Emergency Phone #: _____

_____

Renewal Date(s): _____

_____

Notes: _____

_____

_____

_____

_____

_____

LIMITED WARRANTY - *2001 Ambassador*

HOLIDAY RAMBLER LIMITED WARRANTY

What the Period of Coverage Is:

If you use your Holiday Rambler motorhome only for recreational travel and family camping purposes, the Limited Warranty provided by Holiday Rambler ("Warrantor") covers your new motorhome when sold by an authorized dealer, for twelve (12) months from the original retail purchase date or the first 24,000 miles of use, whichever occurs first. However, the Limited Warranty provided by Warrantor covers the steel or aluminum frame structure of the sidewalls (excluding slide-outs), roof, and rear and front walls for sixty (60) months from the original retail purchase date or the first 50,000 miles of use, whichever comes first.

If you use your motorhome for any rental or commercial purposes whatsoever, the Limited Warranty provided by Warrantor covers your new motorhome when sold by an authorized dealer for ninety (90) days from the original retail purchase date or the first 24,000 miles of use, whichever occurs first. In addition, the Limited Warranty provided by Warrantor covers the steel or aluminum frame structure of the sidewalls (excluding slide outs), roof, and rear and front walls for twelve (12) months from the original purchase date or the first 24,000 miles of use, whichever comes first. A conclusive presumption that your motorhome has been used for commercial purposes arises if you have filed a federal or state tax form claiming any business tax benefit related to your ownership of the motorhome.

The above Limited Warranty coverage applies to all owners, including subsequent owners, of the motorhome. However, a subsequent owner must submit a warranty transfer form by filing the form through an authorized Holiday Rambler dealer. A subsequent owner's warranty coverage period is the remaining balance of the warranty coverage period the prior owner was entitled to under this Limited Warranty. Warranty transfer forms can be obtained by contacting the Consumer Affairs Department. There is no charge for the transfer.

Limitations of Implied Warranties

ANY IMPLIED WARRANTIES ARISING BY WAY OF STATE LAW, INCLUDING ANY IMPLIED WARRANTY OF MERCHANTABILITY AND ANY IMPLIED WARRANTY OF FITNESS FOR A PARTICULAR PURPOSE, ARE LIMITED IN DURATION TO THE TERM OF THIS LIMITED WARRANTY AND ARE LIMITED IN SCOPE OF COVERAGE TO THOSE PORTIONS OF THE MOTORHOME COVERED BY THIS LIMITED WARRANTY. There is no warranty of any nature made by Warrantor beyond that contained in this Limited Warranty. No person has authority to enlarge, amend or modify this Limited Warranty. The dealer is not the Warrantor's agent but is an independent entity. Warrantor is not responsible for any undertaking, representation or warranty made by any dealer or other

person beyond those expressly set forth in this Limited Warranty. Some states do not allow limitations on how long an implied warranty lasts, so the above limitation may not apply to you.

What the Warranty Covers

Warrantor's Limited Warranty covers defects in the manufacture of your motorhome and defects in materials used to manufacture your motorhome. Also see the section "What the Warranty Does Not Cover" set out below.

What We Will Do to Correct Problems

Warrantor will repair and/or replace, at its option, any covered defect if; **(1)** you notify Warrantor or one of its authorized servicing dealers of the defect within the warranty coverage period and within five (5) days of discovering the defect; and **(2)** you deliver your Motorhome to Warrantor or Warrantor's authorized servicing dealer at your cost and expense.

Warrantor may use new and/or remanufactured parts and/or components of substantially equal quality to complete any repair.

Defects and/or damage to interior and exterior surfaces, trim, upholstery and other appearance items may occur at the factory during manufacture. Normally, any factory defect or damage is detected and corrected at the factory during the inspection process performed by the Warrantor. If, however, you discover any such defect or damage when you take delivery of the motorhome, you must notify your dealer or Warrantor within five days of the date of purchase to have repairs performed to the defect at no cost to you as provided by this Limited Warranty.

If two or more unsuccessful repair attempts have been made to correct any covered defect that you believe substantially impairs the value, use or safety of your motorhome, you must, to the extent permitted by law, notify Warrantor directly in writing of the failure to successfully repair the defect so that Warrantor can become directly involved in performing a successful repair to the identified defect.

How to Get Service

The Warranty Registration form must be returned to Warrantor promptly upon purchase to assure proper part replacement or repair and to activate your Limited Warranty. For warranty service simply contact one of Warrantor's authorized service centers for an appointment, then deliver your motorhome (at your expense) to the service center. If you need assistance in locating an authorized warranty service facility, contact Warrantor's Warranty Department (1-877-466-6226). The mailing address is:

P.O. Box 465
Wakarusa, Indiana 46573

In the event the motorhome is inoperative due to malfunction of a warranted part, Warrantor will pay the cost of having the motorhome towed to the nearest authorized repair facility provided you notify Warrantor prior to incurring the towing charges to receive directions to the nearest repair facility.

Because Warrantor does not control the scheduling of service work by its authorized servicing dealers, you may encounter some delay in scheduling and/or in the completion of the repairs.

What the Warranty Does Not Cover

This Limited Warranty does not cover: any motorhome sold or registered outside of the United States or Canada; items which are added or changed after the motorhome leaves Warrantor's possession; items that are working as designed but which you are unhappy with because of the design; normal wear and usage, such as fading or discoloration of fabrics, or the effects of condensation inside the motorhome; defacing, scratching, dents and chips on any surface or fabric of the motorhome, not caused by Warrantor; routine maintenance, including by way of example wheel alignments; the automotive chassis and power train, including, by way of example the engine, drivetrain, steering and handling, braking, wheel balance, muffler, tires, tubes, batteries and gauges; appliances and components covered by their own manufacturer's warranty including, by way of example the microwave, refrigerator, ice maker, stove, oven, generator, VCR, television(s), water heater, furnace, stereo, radio, compact disc player, washer, dryer, inverter and cellular phone; or flaking, peeling and chips or other defects or damage in or to the exterior or finish caused by rocks or other road hazards, the environment including airborne pollutants, salt, tree sap and hail.

Events Discharging Warrantor from Obligation Under Warranty

Misuse or neglect, accidents, unauthorized alteration, failure to provide reasonable and necessary maintenance (see Owner's Manual), damage caused by off road use, collision, fire, theft, vandalism, explosions, overloading, and odometer tampering shall discharge Warrantor from any express or implied warranty obligation to repair any resulting defect.

Disclaimer of Consequential & Incidental Damages

THE ORIGINAL PURCHASER OF THE MOTORHOME AND ANY PERSON TO WHOM THE MOTORHOME IS TRANSFERRED, AND ANY PERSON WHO IS AN INTENDED OR UNINTENDED USER OR BENEFICIARY OF THE MOTORHOME , SHALL NOT BE ENTITLED TO RECOVER FROM WARRANTOR ANY CONSEQUENTIAL OR INCIDENTAL DAMAGES RESULTING FROM ANY DEFECT IN THE MOTORHOME. Some states do not allow the exclusion or limitation of consequential or incidental damages, so the above exclusions may not apply to you.

Legal Remedies

ANY ACTION TO ENFORCE THIS EXPRESS OR ANY IMPLIED WARRANTY SHALL NOT BE COMMENCED MORE THAN ONE (1) YEAR AFTER THE EXPIRATION OF THIS WARRANTY. Some states do not allow the reduction in the statute of limitations, so the above reduction may not apply to you.

THIS WARRANTY GIVES YOU SPECIFIC LEGAL RIGHTS, AND YOU MAY ALSO HAVE OTHER RIGHTS WHICH VARY FROM STATE TO STATE.

HOLIDAY RAMBLER
606 Nelson's Parkway
Wakarusa, Indiana 46573
Telephone: 800-522-7519 or 877-466-6226

LIMITED WARRANTY - ROADMASTER CHASSIS

What the Period of Coverage is:

If you use the Roadmaster Chassis that your motorhome is mounted upon for only recreational travel and family camping purposes, the Limited Warranty provided by Roadmaster ("Warrantor") covers your Roadmaster Chassis for twenty-four (24) months from the original retail purchase date or the first 24,000 miles of use, whichever occurs first.

If you use the Roadmaster Chassis that your motorhome is mounted upon for any rental or commercial purposes whatsoever, the Limited Warranty provided by Warrantor covers your new Roadmaster Chassis for Ninety (90) days from the original retail purchase date of the motorhome or the first 24,000 miles of use, whichever occurs first. A conclusive presumption that the Roadmaster Chassis has been used for commercial purposes arises if you have filed a federal or state tax form claiming any business tax benefit related to your ownership of the motorhome.

Limitations of Implied Warranties

ANY IMPLIED WARRANTIES ARISING BY WAY OF STATE LAW, INCLUDING ANY IMPLIED WARRANTY OF MERCHANTABILITY AND ANY IMPLIED WARRANTY OF FITNESS FOR A PARTICULAR PURPOSE, ARE LIMITED IN DURATION TO THE TERM OF THIS LIMITED WARRANTY AND ARE LIMITED IN SCOPE OF COVERAGE TO THOSE PORTIONS OF THE ROADMASTER CHASSIS COVERED BY THIS LIMITED WARRANTY. There is no warranty of any nature made by Warrantor beyond that contained in this Limited Warranty. No person has authority to enlarge, amend or modify this Limited Warranty. Any dealer selling a motorhome assembled upon a Roadmaster Chassis is not the Warrantor's agent but is an independent entity. Warrantor is not responsible for any

undertaking, representation or warranty made by any dealer or other person beyond those expressly set forth in this Limited Warranty. Some states do not allow limitations on how long an implied warranty lasts, so the above limitation may not apply to you.

What the Warranty Covers

Warrantor's Limited Warranty covers defects in the manufacture of the Roadmaster Chassis (as defined herein) and defects in materials used to manufacture the Roadmaster Chassis. The term "Roadmaster Chassis" as used herein means only the frame; frame cross members; steering axle, including the axle king pins and bushings; hubs and bearings; brake calipers; rotors, brake backing plates and related parts of the axle; tie rods; drag links; drive shafts, including the U-joints; carrier bearings; and, the axle housing and its internal parts. Also see the section "What the Warranty Does Not Cover" set out below.

What We Will Do to Correct Problems

Warrantor will repair and/or replace, at its option, any covered defect if: (1) you notify Warrantor or one of its authorized servicing dealers of the defect within the warranty coverage period and within five (5) days of discovering any such defect; and (2) you deliver the Roadmaster Chassis to Warrantor or Warrantor's authorized servicing dealer at your cost and expense.

Warrantor may use new and/or remanufactured parts and/or components of substantially equal quality to complete any repairs.

Defect and/or damage to the Roadmaster Chassis may occur during manufacture. Normally, any factory defect or damage is detected and corrected at the factory during the inspection process performed by the Warrantor. If, however, you discover any such defect or damage when you take delivery of the Roadmaster Chassis, you must notify your dealer or Warrantor within five days of the date of purchase to have repairs performed to any such defect at no cost to you as provided by this Limited Warranty.

If two or more unsuccessful repair attempts have been made to correct any covered defect that you believe substantially impairs the value, use or safety of your motorhome, you must, to the extent permitted by law, notify Warrantor directly in writing of the failure to successfully repair the defect so that Warrantor can become directly involved in performing a successful repair to the identified defect.

How to Get Service

For warranty service simply contact one of Warrantor's authorized service centers for an appointment, then deliver your Roadmaster Chassis (at your expense) to the service center. If you need assistance in locating an authorized warranty service facility, contact Warrantor's Warranty Department (877-466-6226). The mailing address is:

P.O. Box 465
Wakarusa, Indiana 46573

In the event the Roadmaster Chassis is inoperative due to malfunction of a warranted part, Warrantor shall pay the cost of having the Roadmaster Chassis that the motorhome is mounted upon towed to the nearest authorized repair facility provided you notify Warrantor prior to incurring the towing charges to receive directions to the nearest repair facility.

Because Warrantor does not control the scheduling of service work by its authorized servicing dealers, you may encounter some delay in scheduling and/or in the completion of the repairs.

What the Warranty Does Not Cover

This Limited Warranty does not cover: modifications and alterations to the Roadmaster Chassis by others; the motorhome that is mounted upon the Roadmaster Chassis, including by way of example the motorhome manufacturer's design, manufacture, assembly and/or installation of the side walls, roof, windows, flooring, electrical system, plumbing system, LP-Gas system, appliances and slide-outs; items that are working as designed but which you are unhappy with because of the design; normal wear and usage; routine maintenance including by way of example wheel alignments; component parts covered by their own manufacturer's warranty, including by way of example the engine, transmission, tires, tubes, batteries, exhaust system and the emission control systems; and, flaking, peeling rusting and chips or other defects or damage in or to the frame and frame cross members caused by rocks or other road hazards and the environment including airborne pollutants and salt.

Events Discharging Warrantor from Obligation Under Warranty

Misuse or neglect, accidents, unauthorized alteration, failure to provide reasonable and necessary maintenance (See Owner's Manual), damage caused by off road use, collision, fire, theft, vandalism, explosions, overloading, and odometer tampering shall discharge Warrantor from any express or implied warranty obligation to repair any resulting defect.

Disclaimer of Consequential & Incidental Damages

THE ORIGINAL RETAIL PURCHASER OF THE ROADMASTER CHASSIS AND ANY PERSON TO WHOM THE ROADMASTER CHASSIS IS TRANSFERRED, AND ANY PERSON WHO IS AN INTENDED OR UNINTENDED USER OR BENEFICIARY OF THE ROADMASTER CHASSIS, SHALL NOT BE ENTITLED TO RECOVER FROM WARRANTOR ANY CONSEQUENTIAL OR INCIDENTAL DAMAGES RESULTING FROM ANY DEFECT IN THE MOTORHOME. Some states do not allow the exclusion or limitation of consequential or incidental damages, so the above exclusions may not apply to you.

Legal Remedies

ANY ACTION TO ENFORCE THIS EXPRESS OR ANY IMPLIED WARRANTY SHALL NOT BE COMMENCED MORE THAN ONE (1) YEAR AFTER THE EXPIRATION OF THIS WARRANTY. Some states do not allow the reduction in the statute of limitations, so the above reduction may not apply to you.

THIS WARRANTY GIVES YOU SPECIFIC LEGAL RIGHTS, AND YOU MAY ALSO HAVE OTHER RIGHTS WHICH VARY FROM STATE TO STATE.

ROADMASTER CHASSIS DIVISION
MONACO COACH CORPORATION
91320 COBURG INDUSTRIAL WAY
COBURG, OREGON 97408

VENDOR LIST

Air Conditioner Roof
Dometic Corp.
(219) 463-4858
www.dometic.com

Air Conditioner Dash
Evans Tempcon Inc.
(800) 878-7147

Air Filter
Donaldson
(612) 887-3131
www.donaldson.com

Alternator
Dixie Electric
(800) 478-0608
www.pixie-electric.com

Awnings
CareFree
(800) 621-2617
www.carefreeofcolorado.com

Axle Front
Westport
(216) 431-2000
www.westportaxle.com

Axle Rear
Dana Spicer
(800) 666-8688
www.dana.com

Bathroom Exhaust Fan
Fan-Tastic Vent
(800) 395-4045
www.fantasticvent.com

Batteries
Interstate
(800) 272-6548
www.interstate.com

Brakes - ABS
Meritor Wabco
(800) 535-5560
www.meritorauto.com

Brake (Hydraulic)
Bosch Braking System Corp.
(800) 521-5462

Brake (Exhaust)
Pac Brake
(800) 663-0096
www.pacbrake.com

Carbon Monoxide Detector
MTI Industries, Inc.
(800) 383-0269
www.mtiindustries.com

Flooring
Wilson Art
(800) 433-3222
www.wilsonart.com

Engine
Cummins
(800) 343-7357
www.cummins.com

Entry Step
Kwikee
(800) 736-9961
www.kwikee.com

Generator
Onan
(800) 888-6626
www.onan.com

Hitch Receiver
Reese Products
(800) 758-0869
www.reeseproducts.com

Hydraulic Leveling Jacks
RVA
(760) 746-5732

Inverter
Trace Engineering
(360) 435-8826
www.traceengineering.com

LP-Gas Tank
Manchester
(800) 753-8265

Microwave
Sharp Electronics Corp.
(800) 237-4277

Mirrors - Power Heated
Velvac, Inc.
(800) 783-8871
www.velvac.com

Rear Vision System
Jenson
(800) 732-6866
www.jensonaudio.com

Refrigerator
Norcold
(800) 543-1219
www.norcold.com

Slide Out
Power Gear
(800) 334-4712
www.powergear.com

Smart Wheel
Vehicle Improvement Products
(847) 395-7250

Smoke Detector
Bob Gun Associates
(616) 467-8705

Television
RCA
(877) 266-2728
www.rca.com

Television Antenna
Winegaurd
(319) 754-0600

Tires
Goodyear Tire & Rubber Co.
(800) 399-2772
www.goodyear.com

Toilet
Sealand
(800) 321-9886

Transmission
Allison Transmission
(800) 524-2303
www.allisontransmission.com

VCR (GE Brand)
Thompson Consumer Electronics
(800) 283-6193
www.home-electronics.net

Washer/Dryer
Splendide (Optional)
(800) 736-4127
www.splendide.com

Water Pump
Shurflo
(800) 762-8094
www.shurflo.com

Water Heater/Furnace
Atwood Mobile Products
(801) 972-4621
www.atwoodmobile.com

Windshield Wipers
Diesel Equipment
(336) 373-8331
www.dieselequipment.com

Wheel Simulators
Jae Enterprises
(800) 626-3367

DRIVING SAFETY

This section contains information on: driving tips, emergency situations, towing, safety devices, weighing the motorhome and tires.

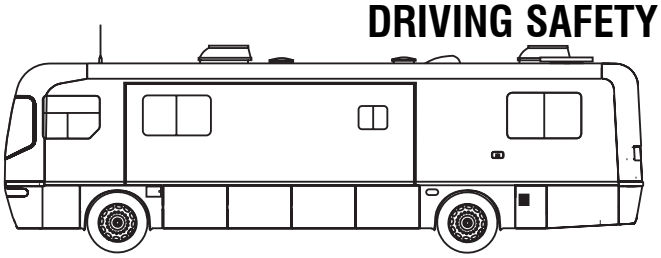

Inspections

There are significant differences between a passenger automobile and a motorhome. Always be aware of these differences when traveling. The key for safely operating the motorhome is inspection. Any defect found could result in problems on the road that can result in lost time and money. Several states require that the motorhome be inspected prior to registration. Know and observe the laws in the states you will be traveling in. They may vary from state to state. A systematic inspection conducted prior to moving the motorhome will ensure nothing is overlooked. An inspection process assists in familiarizing the owner with the motorhome. Prior to moving the motorhome, perform a general inspection by examining the condition and area around the motorhome for hazards. Look high and low when walking around the motorhome.

Familiarize Yourself

The location of the driver's seat in the motorhome is higher and further to the left giving a different perspective of the roadway. Rely on the outside mirrors to line up with the center of the road and to check the conditions behind the motorhome. The dashboard may contain more gauges and controls than are normally found in passenger automobiles. Become familiar with these gauges and what they are indicating before starting out.

Safety Seat Belts

All occupants must be furnished with and use seat belts while the motorhome is moving. Only the seats equipped with safety seat belts are designed to carry passengers while motorhome is in motion. While traveling, do not occupy beds or any seats that do not have a safety belt. Seat belts must only be used on permanently mounted seats. The driver's seat must be locked in the forward facing position while motorhome is in motion. Do not use a seat belt on more than one person. To fasten the seat belt, pull the belt out of the retractors and insert the tab into the buckle; it will click when the tab locks into the buckle. Seat belt lengths automatically adjust to the size and sitting position of the person. Do not route belts over armrest.

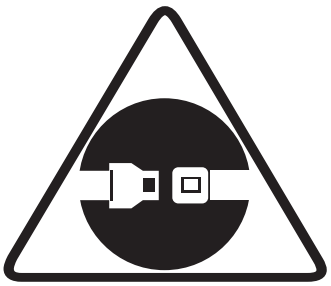

WARNING: Seats must be pointed in a forward position and seat belts fastened while the motorhome is in motion. Avoid seat rotation while in transit. Children must not be transported unrestrained. Infants must be placed in approved safety seats. Small children must be restrained in child safety seats. Failure to comply with these rules can cause injury or death.

Tips for Driving

The motorhome is a complex vehicle and requires an increased level of driving awareness and attention because of its size and various components. Due to the motorhome length the turning radius will be much wider than that of a standard automobile. Always pay close attention to all perimeters of the motorhome: front, sides, rear, roof and undercarriage. Insure the surrounding area is clear of any obstacles. Utilize the driving mirrors to observe traffic and parts of the motorhome: tires, bay doors, blind spots, etc. Use a push-pull method of steering, with both hands parallel on the steering wheel. The motorhome is also heavier than an automobile with a higher center of gravity. These factors affect the reaction time of the motorhome. Swerves and sharp turns, especially performed at high speeds, could result in the loss of control of the motorhome. Keep the size of the motorhome in mind and drive with extra caution to avoid situations which might require quick momentum changes. Increase your reaction time by paying attention to traffic and road conditions 12-15 seconds ahead of the motorhome's position.

The motorhome will travel safely and comfortably at highway speed limits. However, it takes more time to reach highway speed. When passing another vehicle, allow extra time and space to complete the pass due to the added length of the motorhome. When descending a long hill, use the exhaust or engine brake. The transmission and engine will help control downhill speed and can extend the service life of the brake lining. The distance required to stop the motorhome is greater than an automobile. The brakes are designed for the (GVWR) Gross Vehicle Weight Rating. Practice stopping away from traffic to get the "feel" of the distance required to stop the motorhome.

When backing up, have the co-pilot stand at the driver's side rear corner so the co-pilot remains visible in the driver's rear view mirror. The co-pilot can watch for any obstacles and give hand signals during the backing up process. When traveling, make sure bridges being crossed can support the weight of the motorhome. Check the tonnage limit of the bridges before crossing them. Signs should be posted at bridge entrances. Check the posted height of all overpasses or situations where overhead clearances are limited. Keep in mind, road surfaces may have been repaved or become packed with snow and therefore the actual posted clearance height would not apply in such conditions.

Driving Cautions:

- Avoid getting too close to the edge of the road, a soft shoulder may not support the weight of the motorhome.
- Side spacing is best maintained by keeping the motorhome centered in the driving lane.
- Driving lanes in work zones can be uneven, congested and narrower than usual.
- Be cautious of road debris which can damage the undercarriage of the motorhome or become lodged in the dual tires causing damage to the tires, wheel rims or tow car.

- Keep in consideration that posted speed signs are passenger automobile rated. Therefore, an extra awareness of the driving conditions and appropriate speed for a motorhome are necessary, especially on corners and mountain roads.
- Downgrade speed should be at least 5 mph less than upgrade speed, or downgrade speed should be attainable within three seconds of a brake application.
- Use a four second rule when following other vehicles at speeds under 40 mph. Use a five second rule when following at speeds over 40 mph.

Right Turns:

Negotiating a right hand turn in a motorhome can be difficult. Many drivers fear they can not make the turn without entering into the other lane or jumping the curb. Here are a few tips to make a right hand turn easier:

- As the turn approaches, look into the mirror to ensure the lane to the left is clear, then move wide over to the left.
- When you are about to make the turn; the left rear wheel should touch the centerline of the road and your hips should be parallel to the roadside curb of the corner being turned. This will aid in avoiding a premature turn.
- Make the turn slowly.
- Check mirrors frequently being aware of the motorhome's necessary clearance and space management while negotiating the turn.

Left Turns:

- Do not start the turn until the center of the intersection is reached with your hips. If there are two lanes available, take the right hand lane. A car or driver on the left hand side is easier seen.

Night Driving:

- As always be well rested and alert when driving. If necessary, find a safe stopping place to rest until ready to continue.
- Avoid using any interior lights while driving. They can create a glare on the windshield, decreasing visibility.
- Dim the dash lights to a comfortable level to reduce the level of glare.

Extreme Heat and Hot Weather Conditions:

- Observe all gauges frequently. Any variations from the normal conditions should be evaluated promptly.
- Check tire pressure frequently when traveling in hot conditions. Tire air pressure increases with heat. It is not advisable to let air out of a hot tire. When the tires cool down they will return to the correct/previous tire pressure.
- Pay extra attention to hoses and belts which are more susceptible to fatigue in extreme heat.

Winter and Cold Climate Conditions:

- The motorhome should be prepared for Cold Weather Use.
- Keep speeds slow and steady. Make moves gradually and increase visual distance for a gain in reaction time.
- If the road or weather conditions are treacherous find a safe stopping place and wait for conditions to improve.
- Avoid using engine retarding device on wet or slippery surfaces, they can cause the drive wheels to skid.
- Wipers should be in good condition and the washer reservoir should have sufficient window wash fluid that has antifreeze included within it.
- Use the mirror heat to keep the mirrors clear.
- Remove any ice build-up from the entry step to avoid accidental slipping.

Wet Conditions:

- The risk of hydroplaning is increased if tires are worn or improperly inflated.
- Be aware that heavy rain or deep standing water can affect brake application causing them to apply unevenly or grab.

Refueling:

- Truck stops are good refueling points for motorhomes.
- Know which side the fuel port is on. There may not be adequate space to turn around in the parking lot to reposition for the pump.
- Check overhead clearance heights before pulling through the fuel island.
- Be aware of the concrete/steel posts installed around the fuel island.
- Avoid running over the fuel hose as it can get hung up on the motorhome, causing body damage.

WARNING: Avoid the risk of fire or explosion. Turn off all pilot lights and appliances before refueling.

CHECKLIST - PRETRIP PREPARATIONS

Before departure several items will need to be prepared. Some suggestions are listed below. These lists can be used as general guides when preparing to depart.

Items To Carry:

- Local, State and National Maps. Truck atlases can be useful for showing maps, refueling stations and truck repair facilities.
- An emergency road kit and a flashlight.
- Potable/non-potable water hoses and a water pressure regulator.
- Hand tools.
- 12 Volt DC test light, this may be helpful when on the phone with a technician.
- A battery hydrometer to check the condition of battery electrolyte.
- A spare 12 Volt continuous duty solenoid (if applicable).
- An assortment of spare fuses.
- One link kit for ride height control assembly (air suspension only).
- A spare alternator belt.
- Charge air cooler hump hose clamp.

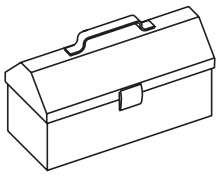

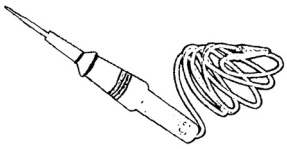

Test Light

Hump Hose Clamp

Link

Interior:

- Start refrigerator operation the night before departure to get a head start on the cooling process. Pre-cool items prior to loading the refrigerator.

NOTE: While traveling, use the inverter to supply power to the refrigerator. Upon arrival, turn the inverter OFF and switch refrigerator operation to LP-Gas or hook the motorhome to shore power.

Polarity Tester.

- Fill the fresh water tank. Disconnect and store the fresh water hose.
- If necessary, load pots, pans, utensils, soap, linens, etc.
- Secure and fasten the bi-fold and pocket doors. Lock the shower door.
- Close roof vents and windows.
- Secure any loose, heavy or sharp objects in case of a sudden stop.
- Close all cabinet doors and drawers.
- Walk the interior and check for items not secured.
- Turn interior lighting off.

Engine Checklist:

- Inspect the engine, transmission and the engine compartment for fluid leaks.
- Inspect the area under the motorhome for fluid leaks or puddles.
- Check all fluid levels, oil, antifreeze, transmission, hydraulic fluid and washer fluid.
- Inspect belts and hoses for wear.
- Inspect wiring for loose, frayed or corroded connections.
- Start engine and listen for any unusual noises.

Driving Preparations:

- Check operation of all exterior lights, headlamps, taillights, brake and clearance lights.
- Inspect fluid level (if applicable) in oil bath hubs and check tire pressure.
- Check house battery condition.
- If applicable, program the navigation system.
- Secure all awning locks.
- Check items in storage bays to prevent shifting or damage to items.
- Outside compartment doors should be closed and locked.
- Look around, above and under the motorhome for obstructions.
- Check fuel level gauge. Check all other dash gauges for operation and correct level indications.
- Secure and lock the entry door for travel.

HITCH -
Using the Rear Receiver

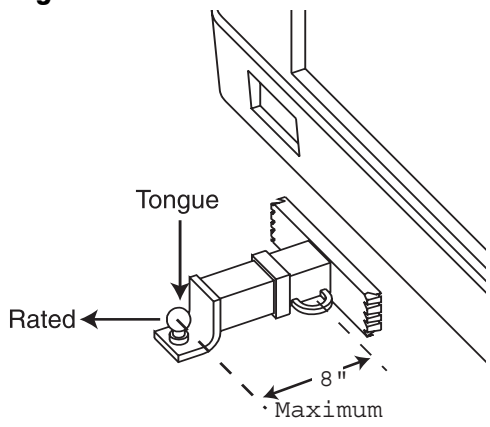

When using the rear hitch remember that the motorhome is intended for towing light loads. The motorhome is designed to be used primarily as a recreational vehicle. Towing will affect durability and economy. Safety and satisfaction require proper receiver use. Avoid excessive loads or other misuse. Do not use the motorhome to tow anything until it has been driven 500 miles (800 kilometers). Weight pushing down on the rear hitch must not exceed 10% of the hitch capacity. It is recommended to weigh the motorhome when fully loaded to ensure proper weight distribution of the GCVW (gross combined vehicle weight). When weighing the motorhome add all passenger weight to the GCVW total. The motorhome fully loaded, and any vehicle or trailer towed by it, must not exceed the GCVW.

WARNING: Any trailer being towed by a motorhome must have adequate brakes. Failure to follow these instructions will create a safety hazard and may result in an accident.

HITCH CAPACITY	RATED CAPACITY	TONGUE WEIGHT
ISB260 ISB300	4,000 LBS. 5,000 LBS.	400 LBS. 500 LBS.

Tow Car or Trailer:

1. Connect tow car or trailer with light harness to motorhome and perform a light check.
2. Connect safety chains.
3. Check the tow car or trailer and the motorhome before starting a trip and at each rest stop.

4. Flat tires on a towed vehicle cannot be detected from the motorhome while driving. A flat tire causes a safety hazard and may cause extensive damage. Check the tires on the tow vehicle frequently.

Tow Plug Connection

The motorhome is prewired with a trailer wire harness. The harness is located on or near the hitch receiver. Convoluted tubing protects the tow harness wires until they are ready for use. Current draw should not exceed ten amps for each designated circuit.

When hooking up a tow plug connection, strip the wires 3/8”. Twist the wire and place under the clip. Secure the screw. Do not leave any loose strands of wire as they can short against the case or other terminals.

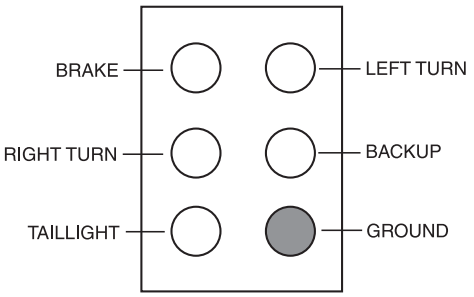

NOTE: When towing a trailer or vehicle with a two-wire system, a turn signal/brake light converter will be needed to adapt the tow plug wiring to the item being towed.

Rear View System

The rear view system is designed to provide the driver with a view of the rear of the motorhome. The field of view is 140° in the diagonal plane, 121° in the horizontal plane, and 90° in the vertical plane. Power is supplied to the system when the ignition key is turned to the Accessory or **ON** position. The **green** LED illuminates. The display on the monitor is controlled by the position of the power switch. When in the **ON** position, the display is present. When placed in the **S/B** (Standby) position, the display is off until the gear shift lever is set to **Reverse**.

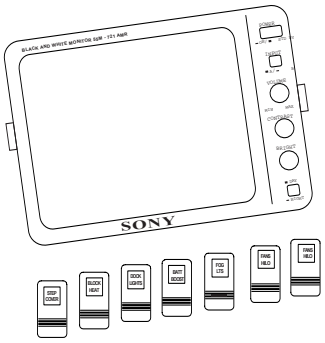

Power Switch:

The switch, when **ON** (in) position, turns on the monitor for viewing. The **green** LED indicator illuminates. When the switch is **OFF** (out), the monitor is in a **STANDBY** mode of operation. The **green** LED remains illuminated when the ignition is on. The monitor displays rear viewing when the transmission is shifted to **REVERSE**.

Camera Selector:

This switch should be left in the **CA1** (out) position. **CA2** (in) position is not used in the motorhome.

Day/Night Switch:

This switch should be left in the **DAY** (out) position for normal viewing. When set in **NIGHT** (in), picture brightness is reduced. **NIGHT** should be used for night viewing and driving through tunnels.

Bright Control:
Clockwise rotation increases the picture brightness. Counterclockwise rotation decreases the picture brightness.

Contrast Control:
Clockwise rotation increases the picture contrast. Counterclockwise rotation decreases the picture contrast.

Audio Control:
Clockwise rotation increases the volume level. Counterclockwise rotation decreases the volume level.

The camera angle may be adjusted to display a suitable rear view. The camera housing cover will need to be removed to gain access to the hexagon mounting bolts. The mounting bolts can be repositioned to the desired angle. Refasten the camera housing cover and seal using an appropriate sealant.

BACKING UP A MOTORHOME

Whether you are a long time owner of recreational vehicles or just starting out, backing up can be a challenge. Following some simple helpful guidelines may help reduce the challenge. When backing up, the driver (pilot) should be comfortable using the mirrors, the back-up camera and the co-pilot's directions (ground guide) for assistance. Practice first, backing up with the co-pilot's guidance in a large unobstructed parking lot. It is a team effort.

The backing up process should begin while the motorhome is in forward motion. Maneuver the motorhome to align it with the chosen site. This allows straight alignment with the site. Aligning the motorhome with the site after the backing process begins will require considerably more room than an automobile, and may require more than one attempt. When the motorhome is properly aligned with the site, the parking area will be visible in both mirrors. Use straight lines, such as road markings, as reference points when possible.

If the destination does not have "pull-through" sites, try to pick a solid, level site. If possible, pick a site located on the left side. This is the preferred side. The driver will have a better field of vision by using the driver side mirror. If the site is on the right side, the driver will have to use the passenger side mirror for backing up, which leaves a blind spot. When a potential site is spotted, stop the motorhome before the site. Get out and observe the area for soft ground, posts, large rocks, low hanging limbs or other obstacles. If the site meets the particular criteria, prepare to back in carefully. Have the co-pilot guide you using the five hand signals.

The co-pilot will perform just as important a job as the driver. When guiding the driver, the co-pilot should be located safely at the left rear corner of the motorhome, facing forward, while remaining visible in the driver side mirror at all times. The co-pilot should make a conscious effort to maintain sight of the driver through the driver side mirror as the front of the motorhome maneuvers.

If the driver loses sight of the co-pilot, stop the backing up process until the co-pilot returns to view. To avoid mishaps, the co-pilot should be focused only on what the driver is doing, with brief observation moments. The driver should receive directions only from the co-pilot. If necessary, stop the backing up process to have co-pilot inspect other areas or angles of concern. Use of walkie-talkies will aid in guidance.

When co-pilot is guiding the driver, only five clearly defined signals should be used, with only one signal given at a time. Flailing arms with indecisive signals only confuse the driver. Signals should be given with purpose and confidence. Directional signals are directing travel of the rear of the motorhome.

If desired direction is left, the co-pilot points left. For example: The co-pilot will use his/her right arm and forefinger pointing distinctly left with arm and finger held on a horizontal plane, indicating desired direction of travel of the rear of the motorhome. This type of directional signal is easily discerned in the mirror by the driver. The directional signal given will remain steady until desired movement is completed.

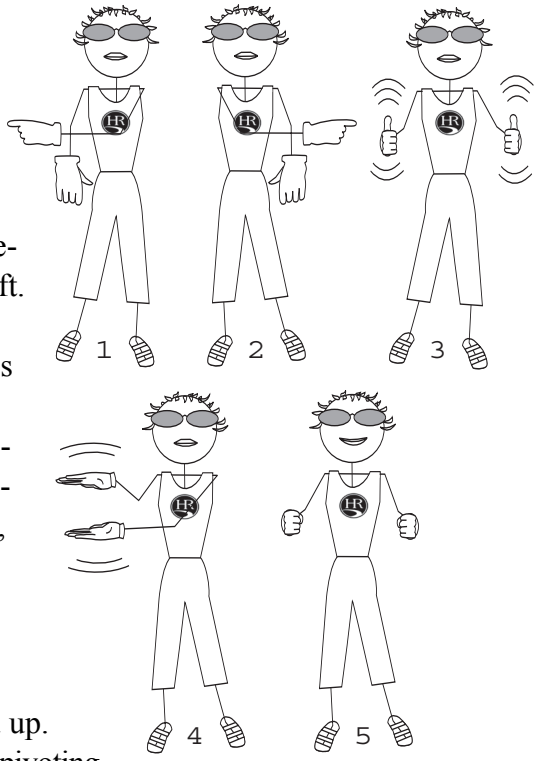

The five directional signals are as follows:

1. Co-pilot uses left hand and arm held horizontal, with forefinger pointing right, to direct rear of motorhome to the right.
2. Co-pilot uses right hand and arm held horizontal, with forefinger pointing left, to direct rear of motorhome to the left.
3. Co-pilot uses both arms and hands parallel with thumbs pointing up and to rear in a waving vertical motion. This signals driver to maintain a straight back direction.
4. Co-pilot holds arms vertically, hands open with palms facing one another. Start with a wide separation, gradually closing distance of hands, in a rate appropriate to vehicle speed, to indicate amount of distance to the stop point.
5. Closed fists indicates STOP.

Backing Up Trailers:

Trailers have only one pivot point. Trailers may be backed up. Towed vehicles using a tow bar or tow dolly have more than one pivoting point which makes this type of equipment not suitable for backing. If using this type of towing equipment, plan ahead. Park safely along the road and walk a distance if necessary to avoid a possible back up situation. Avoid putting the motorhome and tow vehicle in a backing situation. To back up this combination, completely disconnect the tow vehicle from motorhome. Trying to back up the motorhome with a tow vehicle connected will result in damage to the motorhome, tow vehicle and towing device.

The same rules for backing a motorhome may be applied when backing a trailer. When preparing to back a trailer into a space, maneuver the

motorhome sweeping wide, then turn back to the opposite direction. This will set the motorhome and trailer in a position to maneuver the trailer into space. When backing a trailer, the driver may become disoriented with the direction of the steering wheel and the direction of the trailer. The bottom of the steering wheel must be moved in the desired direction of the trailer. For example: If the desired direction of the trailer is left, rotate the bottom of the steering wheel left. If the trailer moves in an undesired direction, use a short "pull-up" method, pulling forward just far enough to align the trailer with the space. The co-pilot should stand safely at the left rear corner of the trailer within view of the driver in the driver side mirror, using the five hand signals for guiding.

CAUTION: Tow bars or car dollies generally are made to travel in a forward direction only. Most towing equipment of this type is not designed for backing. Never attempt short back up distances with a tow bar or tow dolly. Damage to the motorhome, vehicle or towing device will result.

CHECKLIST-SET-UP PROCEDURES

If the site for the motorhome has full hook-ups, use this quick reference hook-up checklist. This hook-up list is only a guide. This checklist has information on hooking up the utilities and preparing the appliances for use. Specific information on the slide room, awning and leveling system operations is discussed in detail in other sections.

- If applicable, unlock any travel locks which may be securing the slide room awning. Check for lateral clearance before extending the slide out room.

For more detailed information refer to the section pertaining to the item of interest.

NOTE: To operate the kitchen slide: The ignition must be OFF, the park brake must be set and the bay doors directly under the slide room must be closed.

CAUTION: Before leveling the motorhome survey the area around and under the motorhome for obstructions which can damage the motorhome or undercarriage components when the air bags are deflated.

- Follow the procedures and guidelines for "Leveling the Motorhome." If the motorhome is equipped with hydraulic jacks, be certain the parking surface will accommodate the weight placed on the jacks.

CAUTION: Hot asphalt may not support the weight that is placed on the hydraulic jack pads. Place thick plywood under the jack pads to help disperse the weight. Never use the leveling system to support the entire weight of the motorhome. Damage from excessive torsional twists can result.

- Open the LP-Gas tank valve.
- If possible, begin appliance operation on LP-Gas for the first 60 minutes. This will allow time for the inverter to stabilize the battery charging. Switch the refrigerator operation to gas, start the water heater and furnace (if needed).
- Prepare the shore cord to be plugged in. Uncoil and inspect the cord. Perform any necessary cord maintenance. Install proper electrical adapters if anything other than 50 amp service is provided. Operate electrical appliances in sequence when hooked to a limited shore power service. Turn shore power circuit breaker OFF prior to plugging in the shore cord.

CAUTION: If shore power service is limited to 15 or 20 amps, use of light duty extension cords and electrical adapters will create a voltage loss through the cord and at each electrical connection. Line voltage loss and the resistance at each electrical connection can be a hazardous combination. Damage to sensitive electronic equipment may result!

- If cable service is provided, hook-up a 75 Ohm or RG6 cable to the cable connection in the service center. If the motorhome has a video selector box press the appropriate viewing button for the item desired.
- A phone connection port is provided in the service center. Phone utility outlets are placed throughout the motorhome, including a phone line attached to the satellite receiver for Pay Per View movies and events.
- Hook a potable water hose to the city water connection in the service center. A water pressure regulator is built in. Turn the hand valve so the pointer indicates “city water.”

NOTE: A water pressure regulator attached between the city water faucet and the potable fresh water hose will protect the hose from swelling or bursting under high city water pressure. Securing the pressure regulator to the hose with pliers will prevent the regulator from being misplaced.

- Hook-up the sewer hose. Sewer drain pipe diameters are generally either three or four inches. Proper sewer hose adapters will ensure against leaks or spillage. With the sewer hose properly connected open the grey water valve (small valve). The black water valve (large valve) remains closed until the tank is full or until time of departure.

DRY CAMPING TIPS

With a little planning and conversation of your resources dry camping will be no more difficult than using full hook ups.

Dry camping requires fully charged and maintained batteries (corrosion cleaned, terminals tightened, cables checked, etc.). If you must refill the battery water level, use only distilled water. Water containing high concentrates of chemicals will destroy the batteries.

Verify a full fresh water tank and empty holding tanks. Many dry camping sites have a running waterspout at the site. Do not intend to refill your tanks with this water, forgetting that your holding tanks will be full once you empty your original fresh water tank.

Get the RV equipped with solar panels. To the RV owner solar panels are a valuable tool in keeping the batteries charged. If the motorhome is equipped with two panels the first will break even on the parasitic loads. The second panel (and third if you can manage as much) will actually charge the battery during the sunlight hours. Keep in mind the solar panels require being kept clean from the dust and dirt of the woods, as well as the grime and pollution of the city. Cleaning the solar panels is as simple as spraying them with window cleaner and wiping with a soft cloth.

Have a full tank of diesel fuel, gasoline or LP-Gas, depending on what type of generator you have.

There are plenty of dry camping locations with suitable sites for large motorhomes. Confirm with the campground host that a particular facility will accommodate your size of coach. Arrive at the campground during daylight hours so you can properly park the RV and prepare for the night ahead. Getting to the site on the narrow and winding campground roads takes skill and patience to avoid the low hanging limbs and tree trunks lining the path. Have the co-pilot or the campground host assist with maneuvering the motorhome around the curves and bends.

Since you do not have to concern yourself with hook ups take the time to ensure that there is plenty of room to extend the slide-out room(s). Next, dump the air bags and level the motorhome. Remember that the leveling process will drain some of the battery power. In addition, avoid having people or pets walking in the coach during the leveling process. Manual leveling will be less critical.

Next, turn the refrigerator off auto and switch over to gas. Switch the water heater to LP-Gas and turn it on about an hour before the hot water is needed.

Set the furnace to a desired nighttime temperature and keep it a bit cooler to prevent the furnace from cycling all through the night.

Check on small items that use battery power: porch light, bay lights, under step light, generator compartment lights, engine compartment lights, etc. If you're not watching television, turn off the 12-Volt booster. One light left on, such as under the front cap near the wipers, can reduce the battery considerably. Do not forget to check the engine block heater in the event it has been plugged into the outlet and is operating a 1,400-watt element when the inverter is on. In a case like that, the batteries will not stay up for even 12 hours.

Some battery draw has to be left on. Leave the battery kill switch on at the entry door because the eyebrow in the refrigerator (some models) requires 12 Volts to operate. In most motorhomes, even though it is switched to gas, the furnace requires 12 Volts to operate the fan.

Keep flashlights handy. If some nighttime hours are to be spent outdoors, build a campfire. Illuminate the vicinity around the outside of the motorhome with some inexpensive tiki torches. Just remember to transport the torches empty of fuel (keep the container under the sink in the cabinet) and extinguish the flames before retiring for the night. Many campgrounds place wood or cement barriers between the site space and fire pit. Be sure to illuminate any barriers between you and the motorhome.

A large size flashlight positioned at the front door is perfect for navigating through the coach during the dark of night without having to use the interior lights. If interior lights are needed, remove excess bulbs in the fixtures to conserve on battery usage. Just one bulb in a central location, such as the vanity, will be sufficient.

During the day it is still important to conserve on energy. Turn on the water pump only when using water; get in the habit of turning the pump off when not in use. While the water pump does not draw an abundance of power, the battery amp hours while dry camping are important and should be conserved.

If you feel that it's too early or too late in the day to run the generator, use the inverter. Remember to turn off the inverter when not in use. When the rest of the campground is up and about, turn on the generator and run it for a couple of hours. The generator may seem loud and intrusive in the heart of nature but you will be pleasantly surprised to discover that the noise is minimal when you walk just a short distance away from the coach. Run the generator as you clean up and prepare for the day.

Become a frequent visitor to the monitor panel and track the water usage as well as battery consumption. Routinely check the LP-Gas and remember that more gas is used in cold weather.

Careful management of water is critical when dry camping. Know the motorhome tank capacities. Picture the amount of milk in a two-gallon container and keep that depiction in your head each time you run the water. If you are on the dry camping circuit for a time, limit the shower usage. Turn the water off when soaping down in the shower. If you are really up to the challenge of preservation, take a sponge bath. Conserve water while brushing your teeth or join the tent campers and hunch over the outdoor water spigot to scrub your gums. Chances are a non-hook up campground will not have large comfortable shower rooms and bathrooms. In fact, it probably has the primitive outhouse we would prefer to avoid. However, if it helps to economize on water go over and use it.

Do not fill a sink full of water to wash a few dishes. Better yet, use disposable dishes. Cook dinner over the campfire. However, if cooking over the campfire is not desired, use the microwave. If you choose to use the microwave, do not run the microwave with just battery power and the inverter because battery power will be consumed quickly. Use the generator to operate the microwave. It is healthy for the generator to run under a strong load such as the microwave.

Remember to let the generator power up for five minutes before plugging in a load.

Planning ahead what is needed from the refrigerator prior to opening it to conserve the battery power. If the weather prevents you from eating out at the picnic table (or if no picnic table is available) eat at the dinette table by candle-light. Leave shoes outdoors to avoid having to run a vacuum cleaner. Open the windows during the day instead of running the air conditioner.

Get back to nature and still enjoy the comforts of the motorhome. With a little imagination the ways to stretch out available resources while dry camping are endless. Camping without hookups is nothing to fear – it is a challenge to overcome. It will be a pleasant surprise to discover how little inconvenience dry camping can be.

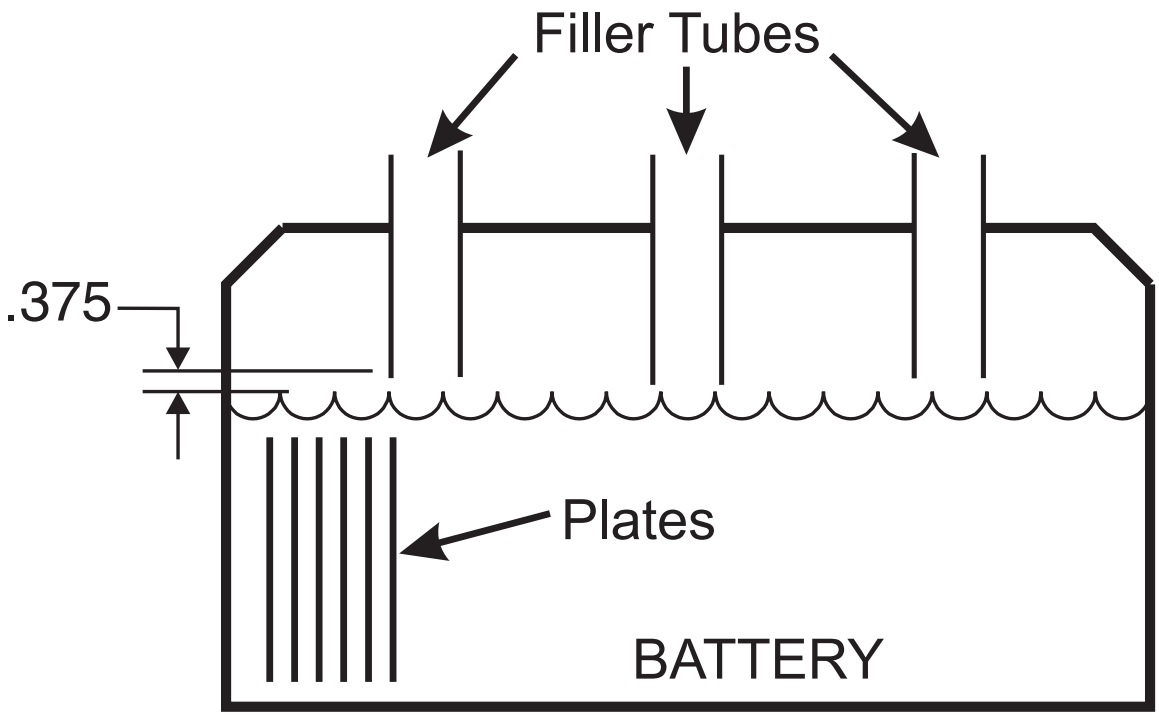

The distilled water level in the battery should be 3/8" below the vent tube.

Battery State of Charge vs Voltage/Specific Gravity			
VOLTAGE	SPECIFIC GRAVITY	STATE OF CHARGE	DEPTH OF DISCHARGE
12.66	1.265	100%	0%
12.45	1.225	75%	25%
12.25	1.190	50%	50%
12.05	1.145	25%	75%
11.90	1.100	0%	100%

BREAKING CAMP

Listed below is a checklist guide to reference when preparing to break camp. Preparing the motorhome for travel will require several small tasks. Properly securing and storing items will help prevent them from getting lost or being damaged during travel.

Outside Checklist:

- Disconnect the cable TV, lower the television antenna and (if applicable) the satellite dish.
- Retract the awnings and secure them for travel.
- Close LP-Gas tank valve. Check the level of the LP-Gas Tank to ensure a sufficient amount is available.
- Drain and flush the holding tanks. First close the grey water valve, run enough cold water down the sink and shower drains until the grey tank is at least 50% full. Be careful not to overfill or flood the grey tank. Next, open the black tank valve allowing the drain cycle to complete. If applicable, connect a non-potable water hose to the No-Fuss hose bib and flush the black tank system. Close the black tank valve, open the grey water valve. The water from the grey tank will help flush the solids from the drain hose.
- Disconnect the sewer hose, flush hose with clean water from non-potable hose, store the hose. Install the sewer cap.
- Fill the fresh water tank. Disconnect and store the fresh water hose. Remove any hose protected water pressure regulator from the city water faucet.
- Turn shore power breaker off and disconnect the shore line. Wind up and store the shore cord.
- Disconnect and stow the phone line.
- Inspect fluid level in oil bath hubs and check tire pressure.

Engine Checklist:

- Inspect the engine, transmission and the engine compartment for fluid leaks.
- Inspect the area under the motorhome for fluid leaks or puddles.
- Check all fluid levels: oil, antifreeze, transmission, hydraulic fluid and washer fluid.
- Inspect belts and hoses for wear.
- Inspect wiring for loose, frayed or corroded connections.
- Start engine and listen for any unusual noises.

Interior Checklist:

- If applicable, retract leveling jacks allowing the air suspension to obtain proper ride height.
- If applicable, clear the slide room path, clean the floor, move the driver seat forward and make sure the bay doors are shut. Once the slide room is fully retracted secure any slide room awning locks.

NOTE: To operate the kitchen slide the ignition must be OFF, the park brake must be set and the bay doors under the slide room must be closed.

- Secure and fasten the bi-fold and pocket doors. Lock the shower door.
- Close roof vents and windows.
- Secure any loose, heavy or sharp objects in case of a sudden stop.
- Close all cabinet doors and drawers.
- Start engine, turn off water heater, water pump and furnace. If applicable, turn inverter **ON**. Switch refrigerator operation to electric. Be sure to turn inverter **OFF** and switch refrigerator operation back to LP-Gas or hook-up the motorhome to shore power upon arrival.

Departure Checklist:

- Check items in storage bays to make sure shifting or damage of items will not occur.
- Look around, above and under the motorhome for obstructions. Check for debris stuck between the rear dual tires.
- Walk around the motorhome and camp area checking for forgotten items.
- Outside compartment doors should be closed and locked.
- Check operation of all exterior lights, headlamp, taillamp, brake and clearance lights.
- Walk through the interior and check for any unsecured items.
- Turn the interior lighting off.
- Check the fuel level gauge. Check all other dash gauges for operation and correct level indications.
- Carefully pull forward out of the campsite. If necessary, clean the site and check for any forgotten items.
- Secure and lock the entry door for travel.

EMERGENCY PROCEDURES-ROADSIDE

If an emergency situation should occur use the appropriate braking technique and pull off the roadway a safe distance from traffic (if possible) then set the parking brake. Turn on the hazard warning flashers, especially when parked alongside traffic lanes. In the event of an emergency stop due to a mechanical breakdown or other motorhome related problems, contact Holiday Rambler Customer Support (1-877-466-6226) or an emergency service provider.

An emergency road kit should include at least three reflective warning signs, road flares, a flashlight, spare automotive fuses and an assortment of hand tools. For added safety a separate fire extinguisher should be considered. The motorhome is equipped with a fire extinguisher located inside next to the co-pilot seat. Road flares or reflective warning signs should be displayed if the motorhome is alongside of the road for any length of time.

Guidelines for placing the warning triangles depend upon the road characteristics and visibility. For example: The standard placement is 10 feet, 100 feet and 200 feet from the rear of the motorhome when on a divided highway or one-way road. On a two-way road with traffic traveling both directions the same placement would also be required at the front of the motorhome. Roads with curves and hills may require the placement of the last/furthest triangle to be 500 feet behind the motorhome in order to safely warn approaching traffic.

Transmission - Rocking Out

It may be possible to rock the motorhome out if you are stuck in snow, mud or deep sand. Shift the selector to **D** (Drive) and apply steady light throttle. Never full throttle as you may spin the wheels and bury yourself deeper. When the motorhome has moved forward as far it will go, apply and hold the service brakes. Allow the engine to return to idle before selecting the **R** (Reverse). Release the brake and apply light throttle until the motorhome has rocked as far it will go. Again, apply the service brake and allow the engine to return to idle. Repeat this process if the motorhome has moved a greater distance. If the process does not free the motorhome call for towing assistance.

NOTE: Sudden movements or lurching the motorhome with an open throttle can result in damage to the transmission. Avoid this condition by making shifts only when the throttle is closed and engine is at normal idle.

Jump Starting

When using jumper cables to start the engine, make sure the cables are connected in parallel. That is positive (+) to positive (+) and negative (-) to negative (-). Always connect your positive (+) before the negative (-) and disconnect the negative (-) before the positive (+) to prevent arcing. When using an external electrical source to start the engine shut the disconnect switch to **OFF** position.

Batteries can emit explosive gases. Always ventilate the battery compartment prior to any work or service to the batteries. Extinguish all smoking material and keep all open flame and spark producing devices away from battery area.

In the event of a roadside emergency, contact the nearest Cummins Center or phone **1-800-DIESELS** (800-343-7357) for Cummins Customer Assistance Center.

TOWING PROCEDURES

If a towing company is called for service it is recommended that they use a lowboy/landall type of trailer and if a tow truck is used it needs to have a stinger (an arm that goes under motorhome and hooks to front cross member). Inform the tow company of the weight and length of the motorhome, number of passengers and milepost location.

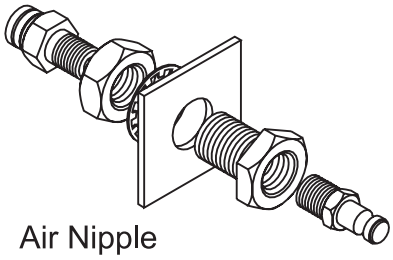

The towing company may need to locate the air nipple to release the air brakes. The air nipple is located on the roadside next to the generator and should only be used by towing personnel. Generally, if the motorhome ever needs to be towed, use the following instructions:

- Secure any loose or protruding parts if the motorhome is damaged.
- Inspect points of attachment on a disabled motorhome. If attachment points are damaged, select other attachment points at a substantial frame structural member.
- Never allow anyone to go under a motorhome while it is being lifted by towing equipment unless the disabled motorhome is adequately supported by safety stands.
- Do not tow the motorhome from the rear. Towing from the rear will cause the front tires and suspension to be seriously overloaded, possibly resulting in a tire or front suspension failure. Rear frame extensions are not designed to withstand weight loads imposed by lifting the rear of the motorhome.
- If rear wheels are disabled, place the motorhome on a flat bed trailer or use a heavy duty dolly under the rear wheels and tow from the front of the motorhome.
- The drive shaft must be removed to prevent damage to the transmission.

WARNING: In the event the motorhome requires towing, ensure all precautions are followed. The driveline must be disconnected and the mudflap may need to be removed. When towing a motorhome equipped with the HWH Air Leveling System, the ignition MUST be left in the ON position so that air suspension may operate. Damage to the motorhome from a towing company will not be covered by Holiday Rambler.

TIRES

The tire designed for the motorhome is a very technical and precisely engineered product. To obtain the maximum wear and best service out of the tires it is helpful to understand the function of a tire. A tire is a "container" that holds air. It is the combination of air and tire casing that supports the motorhome and its contents. In addition, since the tire is the only contact the motorhome has with the road surface, it must provide other functions such as traction for moving, stopping, steering and providing a cushion for the motorhome.

The Importance of Air Pressure

The most important factor in maximizing the life of the tires is maintaining proper inflation. Driving on any tire that does not have the correct inflation pressure for the load of the motorhome is dangerous and may cause premature wear, tire damage and/or loss of control of the motorhome.

A tire that is underinflated will build up excessive heat that may go beyond the design limits of the rubber and radial cords. This could result in sudden failure. A tire that is underinflated will also cause poor motorhome handling, rapid and/or irregular tire wear and an increase in rolling resistance which results in a decrease of fuel economy.

Over-inflation will reduce the tire's footprint/contact patch with the road, thus reducing traction, braking capacity and handling of the motorhome. A tire that is over-inflated for the load will have a harsh ride, uneven tire wear and becomes susceptible to impact damage.

Maintaining correct tire inflation pressure for each loaded wheel position on the motorhome is of the utmost importance and must be a part of regular motorhome maintenance.

How Much Air Should I Carry in My Tires?

Federal law requires that the specifications for the tire's maximum load rating be molded into the sidewall of the tire. The amount of air pressure to use is dependent on the weight of the motorhome when it is fully loaded. The chart within this section shows weights that can be supported by various air pressures. Utilizing less air pressure means a lesser load can be carried by the tire.

Weight Terms

The GVWR (Gross Vehicle Weight Rating) and GAWR (Gross Axle Weight Rating) stickers on the motorhome (normally located on the support pillar next to the driver's seat) will show the chassis manufacturer's and/or the RV manufacturer's total vehicle maximum weight ratings and per axle weight rating.

The GVWR is the maximum total weight for which the motorhome is rated – including passengers, fluids, and cargo. The GAWR is the maximum for which a single axle is designed. These per axle and total maximum weight ratings could be limited by the tires, wheels, axle and axle bearings, the motorhome frame or other components of the motorhome.

The GAWR sticker is only a guide in knowing the maximum loaded axle weights, and subsequently the correct tire inflation pressure. Every recreational vehicle, even of the same make and model, will vary in actual loaded axle weights because of different options and personal loads.

While the actual loaded axle weight should be below the GAWR, the motorhome must be weighed in a loaded condition to know its actual weight. Weigh the front axle, the total unit and the rear axle. It is possible for a motorhome to be within the GVWR yet overloaded on an axle. It is even possible for one wheel position to be overloaded, even though the GAWR has not been exceeded. For this reason (if there is room to the sides of the scales) weigh each wheel position of the motorhome. This will give a clear indication of exactly how the weight of the motorhome is distributed. These instructions and diagrams are presented on the following pages. When the total weight and the weight on each axle is known, the tire load data chart in this manual will show the correct cold inflation pressure per tire for each axle.

There are two important factors to consider when loading the motorhome: total weight and balance. When loading heavy objects keep them as low as possible, preferably on the floor. Load weight must be distributed as evenly as possible. The following is an explanation of commonly used weight abbreviations.

- **Gross Vehicle Weight Rating (GVWR):** GVWR means maximum permissible weight of this motorhome. GVWR is equal to or greater than the sum of UVW plus NCC.

- **Unloaded Vehicle Weight (UVW):** UVW means weight of this motorhome as built at factory with full fuel, engine oil and coolants. UVW does not include cargo, fresh water, LP-Gas, occupants or dealer installed accessories.

- **Net Carrying Capacity (NCC):** NCC means maximum weight of all occupants including driver, personal belongings, food, fresh water, LP-Gas, tools, tongue weight of towed vehicle, dealer installed accessories, etc., that can be carried by this motorhome. (NCC is equal to or less than GVWR minus UVW.)

- **Gross Combined Weight Rating (GCWR):** GCWR means value specified by motorhome manufacturer as maximum allowable loaded weight of this motorhome with its towed trailer or towed vehicle.

- **Gross Axle Weight Rating (GAWR):** GAWR means load-carrying capacity specified by manufacturer of a single axle system, as measured at tire ground interfaces.

MODEL YEAR: 2001 **MAKE:** HOLIDAY RAMBLER **MODEL:** AMBASSADOR

UNIT NO. _____ **CHASSIS VIN:** _____

		LBS.	KGS.
GVWR	(Gross Vehicle Weight Rating) is the maximum permissible weight of this fully loaded motorhome	_____	_____
UVW	(Unloaded Vehicle Weight) is the weight of an exemplar Motorhome as manufactured at the factory with full fuel, engine oil and coolants (*1)	_____	_____
SCWR	(Sleeping Capacity Weight Rating) is the manufacturer's designated number of sleeping positions multiplied by 154 pounds (70 kilograms)	_____	_____
CCC	(Cargo Carrying Capacity) is the GVWR minus each of the following: UVW, full fresh (potable) water weight (including water heater), full LP-Gas weight and SCWR	_____	_____
GCWR	(Gross Combination Weight Rating) is the maximum allowable combined weight of this motorhome and the towable product (*2)	_____	_____
	FACTORY INSTALLED OPTIONS are options installed at the factory but do not include dealer installed after market equipment	_____	_____

CARGO CARRYING CAPACITY (CCC) COMPUTATION

GVWR	_____	_____
minus UVW	_____	_____
minus fresh water (*3) weight of ___ gallons @ 8.3 lbs./gal	_____	_____
minus LP-Gas weight of ___ gallons@ 4.5 lbs./gal	_____	_____
minus SCWR of ___ persons @ 154 lbs./person	_____	_____
CCC for this motorhome (*4)	_____	_____

CONSULT OWNER MANUAL(S) FOR SPECIFIC WEIGHING INSTRUCTIONS AND TOWING GUIDELINES.

WARNING:DO NOT EXCEED THE GVWR, GCWR AND/OR GAWR AFTER LOADING YOUR MOTORHOME WITH WATER, FUEL, PASSENGERS AND CARGO. GAWR (Gross Axle Weight Rating) means the maximum permissible load weight a specific axle is designed to carry. See Federal Certification Label for disclosure of The GAWR for each axle.

(*1) The UVW has been determined by weighing an exemplar motorhome with some but not all optional equipment available for each model year, make and model of motorhome. The result of the weighing of the exemplar motorhome is then used in calculating the UVW of other motorhomes of same model year, make and model. Your actual UVW may vary based upon options ordered. Please contact the manufacturer for the actual weight of each option.
(*2) Consult your Owner's Manual for towing limitations, restrictions and other guidelines.
(*3) Your motorhome's fresh water tank and water heater taken together determine the gross fresh water capacity. Your usable fresh water capacity, however, may be less.
(*4) Dealer installed equipment and towed vehicle tongue weight will reduce CCC.

Weighing the Motorhome

Improperly inflated tires or suspension that is incorrectly loaded can result in poor fuel economy, poor handling and over-stressed chassis components. Vehicle loading affects tire inflation pressure and the load carried by each axle. Motorhome axle configuration and floor plan styles will require different weighing procedures.

WARNING: Improperly inflated or overloaded tires can cause a blowout. An overloaded axle can cause a component failure of the suspension system. Tire blowouts or broken suspension components can lead to loss of vehicle control resulting in property damage, personal injury or death.

CAUTION: If actual weight carried by any tire is below the tire chart weight specification a minimum tire pressure of at least 75 psi. must be maintained. Tire pressure below 75 psi. can overheat and damage the tire casing leading to premature tire failure or blowout.

Slide Out Tire Pressure:

A motorhome equipped with slide out room(s) will weigh slightly heavier on the driver's side. The tire inflation pressure of the driver's side tires determines the inflation pressure for all tire(s) on that axle. This is due to the weight transfer that occurs when cornering. Approximately the same weight load will be transferred to the passenger side around left-hand corners.

NOTE: When weighing a motorhome equipped with a slide out room, each tire on any axle must be inflated to the same pressure. The wheel position carrying the most weight will determine the tire inflation pressure for each tire of that particular axle.

Scale:

Certified public scales are located in a variety of places such as moving and storage lots, farm suppliers with grain elevators, gravel pits, recycling companies and large commercial truck stops.

If you are not aware of a nearby public scale, check the local area telephone book yellow pages under “scales-public” section or “weighers.” A nominal fee will be charged, but this is money wisely spent.

Weight scale types and weighing methods will affect the procedure used to determine proper tire inflation pressure and axle loading. The size of some scales will allow the entire motorhome to fit on the scale, which will read the GVW with only one scale recording required. Other scales are designed to weigh only one axle at a time, which may require two or three scale readings to determine the GAW or GVW total. Some scales will read only one wheel position at a time due their physical size. Several scale readings may be required to determine the GAW or GVW total.

Slide-out equipped motorhomes will require each wheel position to be weighed. This is referred to as a four corner weigh. This type of weighing procedure will accurately determine what the correct tire inflation pressure should be. Depending on the type of scale being used, several different scale readings may be required.

NOTE: The most accurate method to determine proper tire pressure is a four corner weigh. A slide out motorhome will require each tire to be weighed independently. Weighing an axle will net the total weight carried by that axle. When calculating the drive axle dual tire pressure using a independent corner weigh method, divide the total weight by two to determine the weight carried by each tire. When weighing the entire drive axle, divide the total weight by four to determine the approximate weight carried by each tire.

Example:

The motorhome must be weighed fully loaded to obtain accurate scale readings and to determine the proper tire pressure.

- Take the rear axle gross axle weight rating (GAWR) and divide it by two. Record the figure next to scale B GAWR ÷ 2. Example: If rear axle GAWR is 13,000 lbs. GAWR ÷ 2 would be 6,500 lbs.
- Weigh the driver's side rear corner (scale B) and record the scale reading next to gross axle weight (GAW) for scale B. Example: Scale B reading is 5,100 lbs.
- Repeat procedure for the rest of the scale readings.
- Add the GAWR from scales B and D and enter the sum next to the final GAWR. Example 13,000.
- Add the GAW from scales B and D and enter this sum next to the final GCAW. Example: 10,000.
- Compare scale readings GCAW against GAWR readings. All figures on line 2 are not to exceed figures on line 1.
- Use tire chart with scale reading to determine correct tire pressure.

NOTE: Scale readings and gross axle weight ratings are fictitious. Actual scale readings and gross axle weight ratings will vary with model and options.

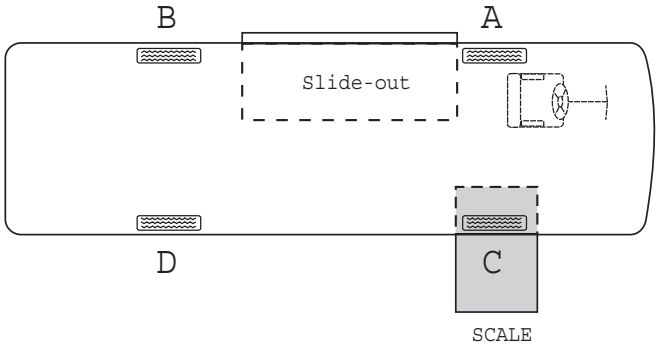

Rear

Scale B
1. GAWR ÷ 2 (6,500)
2. GAW (5100)

+

Scale D
1. GAWR ÷ 2 (6,500)
2. GAW (4,900)

=

1. GAWR (13,000)
2. GCAW (10,000)

Weighing a two axle non-slide motorhome.

- Record the gross axle weight ratings (GAWR) and the gross vehicle weight rating (GVWR).
- Weigh and record each wheel position or total axle weight.
- If necessary, adjust the payload so the GAWR is not exceeded. Total combined weights must not exceed the GVWR.
- Using the tire chart, locate the recommended air pressure for the weight carried by each tire. Adjust the tire pressure accordingly.

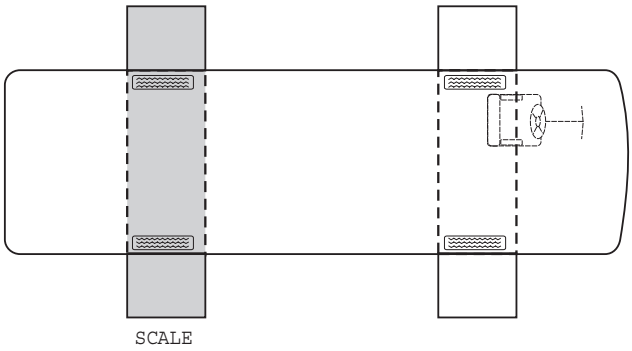

GAWR (Rear) + GAWR (Front) = GCVW

GAW (Rear) + GAW (Front) = GCAW

Weighing a two axle slide-out motorhome.

- Slide rooms must be in the retracted position.
- Record the gross axle weight ratings (GAWR) and the gross vehicle weight rating (GVWR).
- Weigh and record the weight placed on each tire.
- If necessary, adjust the payload so the GAWR is not exceeded. Total combined weights must not exceed the GVWR.
- Using the tire chart, locate the recommended air pressure for the weight carried by each tire. Adjust the tire pressure accordingly.

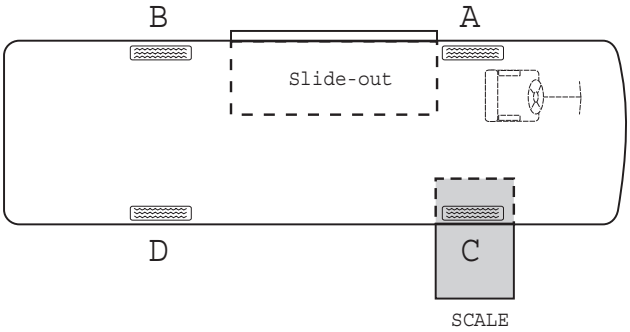

Rear

Scale B $\frac{GAWR \div 2}{GAW}$

+

Scale D $\frac{GAWR \div 2}{GAW}$

= $\frac{GAWR}{GCAW}$

Front

Scale A $\frac{GAWR \div 2}{GAW}$

+

Scale C $\frac{GAWR \div 2}{GAW}$

= $\frac{GAWR}{GCAW}$

TIRE CHART

TIRE SIZE	MAX Speed Rating (MPH)	Dual (D) Single (S)	INFLATION PRESSURE PSI												
			65	70	75	80	85	90	95	100	105	110	115	120	125
8R19.5	75	D	2350	2460	2570	2680	2780	2880	2980	3070	3160	**3375(F)**			
		S	2410	2540	2680	2800	2930	3060	3170	3280	3400	**3500(F)**			
225/70R19.5	75	D		2720	2860	3000	3115	3245	**3415(F)**						
		S		2895	3040	3195	3315	3450	**3640(F)**						
245/70R19.5	75	D		3415	3515	3655	**3875(F)**	3940	4075	**4375(G)**					
		S		3640	3740	3890	**4080(F)**	4190	4335	**4545(G)**					
265/70R19.5	75	D				3750	3930	4095	4300	4405	4560	4805	4860	**5070(G)**	
		S				3970	4180	4355	4540	4685	4850	5070	5170	**5355(G)**	
9R22.5	65	D	3120	3270	3410	3550	3690	3820	**3950(F)**						
		S	3190	3370	3560	3730	3890	4050	4210	4350	**4500(F)**				
10R22.5	65	D	3690	3870	4040	4200	4375	4520	4670	**4875(F)**	4970	5110	**5250(G)**		
		S	3770	4000	4210	4410	4610	4790	4970	**5150(F)**	5320	5490	**5680(G)**		
11R22.5	75	D				4760	4950	5120	5300	5470	**5750(G)**	**5800(H)**			
		S				4990	5220	5430	5640	5840	**6175(G)**	6240	6430	**6610(H)**	
12R22.5	65	D				5190	5390	5590	5780	5960	6150	6320	6500	**6750(H)**	
		S				5450	5690	5920	6140	6370	6590	6790	7010	**7390(H)**	
245/75R22.5	75	D		3260	3425	3640	3740	3890	4080	4190	4335	**4410(G)**			
		S		3470	3645	3860	3980	4140	4300	4455	4610	**4675(G)**			
255/70R22.5	75	D		3585	3765	3970	4110	4275	4410	4455	4610	4675	**5070(H)**		
		S		3815	4005	4190	4370	4550	4675	4895	5065	5205	**5510(H)**		
265/75R22.5	75	D			4040	4205	4370	4525	4685	**4805(G)**					
		S			4070	4255	4440	4620	4800	4975	5150	**5205(G)**			
275/70R22.5	75	D					4535	4750	4960	5165	5370	5575	5775	5975	**6175(H)**
		S					4885	5080	5305	5530	5750	5965	6185	6400	**6610(H)**
275/80R22.5	75	D					4855	5080	5305	5525	5745	5965	6180	**6395(H)**	
		S					5265	5515	5755	6000	6235	6475	6710	**6940(H)**	
295/75R22.5	75	D			4690	4885	5070	5260	5440	**5675(G)**	5800	**6005(H)**			
		S			4725	4945	5155	5370	5510	5780	5980	**6175(G)**	6370	**6610(H)**	
295/80R22.5	75	D				4855	5100	5335	5570	5805	6035	6265	6490	6720	**6940(H)**
		S				5480	5750	6020	6285	6550	6810	7070	7320	7580	**7830(H)**
315/80R22.5	75	D					5840	6070	6395	6540	6770	6940	7210	**7610(J)**	7390
		S					6415	6670	6940	7190	7440	7610	7920	**8270(J)**	8820
285/75R24.5	75	D			4740	4930	5205	5310	5495	**5675(G)**					
		S			4770	4990	5210	5420	5675	5835	6040	**6175(G)**			

Holiday Rambler is not the author of this chart and makes no representation or warranty concerning the accuracy of the information disclosed by the chart. Holiday Rambler is not responsible for the accuracy of the information disclosed or for any errors within the Tire Inflation Chart.

Inspecting & Pressure

Check the tire pressure regularly. If a tire is punctured by a nail or screw, creating a slow leak, it may eventually be spotted if it is a front tire or an outside rear dual. However, if there is a leak on an inside dual the chances of noticing it without an air pressure check are very slim. If you begin driving unaware that an inside dual tire has a low air pressure or is flat, very quickly (in most cases a few miles) the outside rear tire (next to the low air pressure tire) will heat up from carrying double the load, leading to failure of the outside dual tire. The motorhome will end up with two flat tires on the same side on the same axle.

The air pressure should be checked every two weeks or at least once a month and before any major trip. The RV tire air pressure should be checked every "drive" morning on both long and short trips (driving a day or less). The tires should be checked before leaving on a trip and again before you start your trip home. If the motorhome is stored for any length of time the air pressure should be checked prior to storage. More importantly, check the tire pressure when it is pulled out of storage.

Check the tire pressure when the tires are "cold" and have not been driven for more than one mile. The stated load capacity for a given cold inflation pressure is based on ambient outside temperature. If you must check the tires when they are warm or hot, allow for a slight increase in air pressure and make sure they are within a couple of pounds of each other on the same axle (does not apply to slide-out equipped motorhomes). Never let air out of a hot tire.

To check or maintain the inflation pressure in the tires, use a quality truck tire air gauge which has an angle dual head. This type of gauge will allow you to check inflation of the inner dual wheel which has the valve stem pointing outward. The outer wheel has the valve stem pointing inward. Nothing should restrict the ability to check the tire's air pressure daily when traveling in the motorhome. Pressure sealing valve caps should always be used to prevent air from escaping from the valve stem. If there are valve stem extension hoses, make sure they are good quality stainless steel braid reinforced and are securely anchored to the outer wheel.

Optimum tire performance is achieved with proper inflation pressures for the loads being carried. The air pressure of all tires should be checked and corrected prior to travel, or daily if in full time use.

Tires of different patterns should not be mixed on the same axle. The difference in tractive force could cause rear end gear fight and mechanical damage to the drive train. Tires of different size or construction must never be mixed on the same axle.

Higher than recommended pressure can cause:

- Hard ride.
- Tire bruising or carcass damage.
- Rapid tread wear at center of tire.

Lower than recommended pressure can cause:
- Tire squeal on turns.
- Rapid and uneven wear on the edges of the tread.
- Tire rim bruises and rupture.
- Tire cord breakage.
- High tire temperatures.
- Reduced handling.
- High fuel consumption.

Unequal tire pressures on same axle can cause:
- Uneven braking, swerve of acceleration.
- Steering lead, torque steer.
- Reduced handling.

Tire Rotation

Tire rotation can increase the useful life of the tires by achieving uniform wear on all of the tires. The first tire rotation is the most important. The tire rotation pattern used for the motorhome should be evaluated by the tire manufacturer. Any unusual or unique wear pattern which may have developed should be evaluated before rotation. Misalignment, imbalance or other mechanical problems may exist and will need corrected prior to rotation.

The tire rotation should be performed every 6,000 to 8,000 miles, or at any sign of uneven wear. After a tire rotation, the inflation pressures should be checked and adjusted for the actual loads of the wheel position accordingly.

Tires are covered by the tire manufacturer. Holiday Rambler is not responsible for tire wear.

Blocking When Leveling

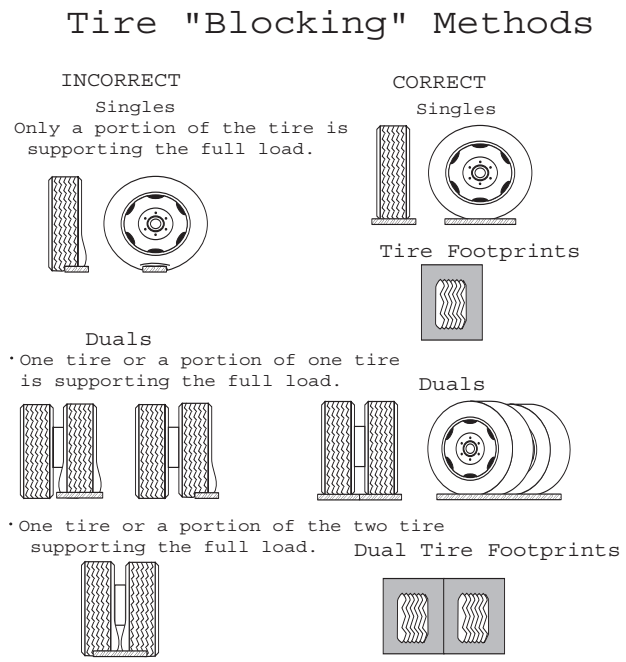

Extreme caution must be taken to ensure that the tires are fully supported when placing blocks under the tires. The load on the tire should be evenly distributed on the block. In the case of dual tires, distribute the load evenly on blocks for both tires. If not properly blocked, the steel cables in the sidewall of the tires may be damaged and could lead to premature fatigue of the sidewall.

Proper Cleaning:

Road oil will cause deterioration of the rubber. Dirt buildup will help hold chemicals in the air next to the tire and will also cause deterioration.

When cleaning any rubber product, proper care and methods in cleaning must be used to obtain the maximum service years out of the tires. Use a

soft brush and a mild detergent to clean the tires. If a dressing product is used to “protect” the tires from aging, use extra care and caution. Tire dressings that contain petroleum products or alcohol may cause deterioration or cracking.

In many cases it is not the dressing that causes a problem but the chemical reaction that subsequently occurs. When these same dressing products are used on a passenger car tire that is replaced every three to four years, it is rare to see a major problem. However, in most cases, RV tires may last longer due to limited annual mileage and exposure.

Storage of Tires - Long Term

The recreational vehicle is designed for recreation not long-term storage. However, unless you are living in your motorhome full-time you will have a need to store it. Rubber tires age faster when not being used. A cool, dry, sealed garage is the preferred method of storage. Many recreational vehicles are stored outside in the elements. Some storage surfaces may cause tires to age prematurely. Placing a barrier (i.e. cardboard, plastic or plywood) between the tire and the storage floor/ground surface will help to protect the tires.

There are a few steps that can be taken to reduce the aging effects from long-term storage or a non-use period. Thoroughly clean the tires. Cover the tires to block direct sunlight and ultraviolet rays. Store the recreational vehicle out of a high ozone area. Failure to take these steps can cause early deterioration and shorten the life of the tires.

NOTE: When the motorhome is stored the tires should be inflated to maximum inflation pressure as indicated on the sidewall of the tire.

Before removing the motorhome from long-term storage thoroughly inspect each of the tires. This means a close examination of each tire’s tread area and air pressure. If the pressure check indicates the tires have lost air during storage, inflate them to the correct pressure for the current load before putting the motorhome into service.

In Case of Flat Tire

In case of a flat tire it is recommended to call for roadside assistance. The size and weight of the motorhome and its tires require the proper equipment to change the tire. A professional service technician will have the equipment and training needed to repair or replace the tire. In the case of sudden tire failure avoid heavy braking. Hold the steering wheel firmly and gradually decrease speed. Slowly move to a safe off-road place, which should be a firm level spot. Turn the ignition off and turn the hazard flasher system ON. Goodyear Tire Company has an emergency number which offers 24 hour

assistance. To contact Goodyear call (877) 484-7376. The old tire should be saved for warranty.

Hub Piloted Mounting:

- Before using flange nuts that have already been used in service, apply two drops of oil at one point between the flange and hex. This will allow parts to rotate freely and provide the proper clamping force when tightened. Use any common lubricant typically used for fasteners. Examples are motor oil and general purpose lubricating oils. Excessive lubricant is not desirable, this will not improve the nut performance. Excessive lubricant makes the nuts hard to handle, attracts dirt to the nuts and may cause unsightly appearance to the wheel. Only used nuts need to be lubricated.
- Since flange nuts generate higher clamping force always use grade eight studs with hub mount wheels.
- Before installing the wheels, lubricate the hub pilot pads with a drop of oil to prevent galling. Do not lubricate any other wheel or hub surface.
- For a hub with intermittent pilot pads, position a pad at the twelve o'clock position to center the wheel and reduce runout.

NOTE: Loosen and tighten lug nuts in a star pattern sequence. Sequence tighten to 50 ft lb first, then sequence tighten to 500 lb (over tightening can cause distortion).

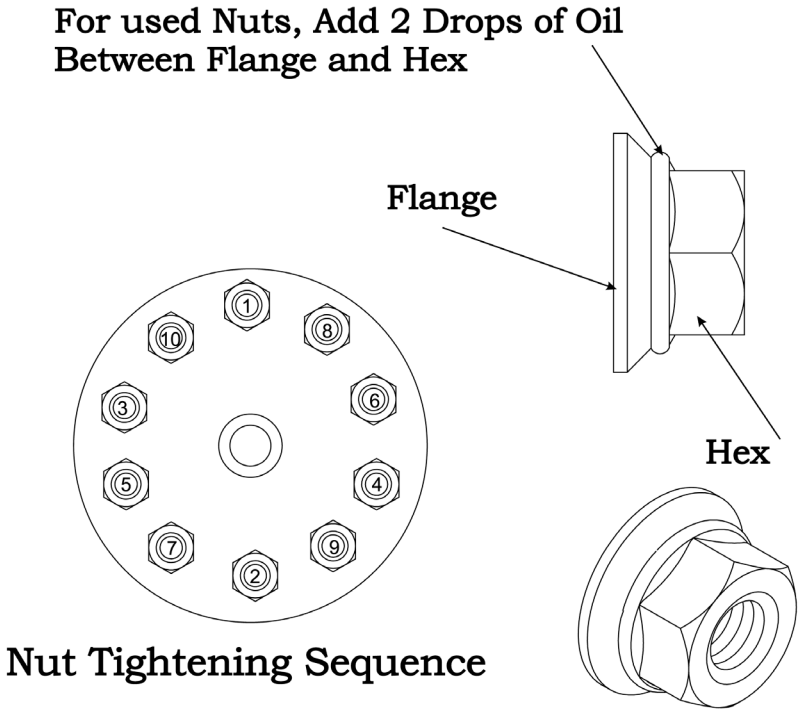

Front Wheels:

Slide the front wheel over the studs, being careful not to damage stud threads. Snug the nuts in sequence, do not tighten them fully until all have been seated. Tighten the nuts to 500 ft.lbs in sequence (as shown in the illustration).

Dual Rear Wheels:

Slide the inner dual wheel over the studs, being careful not to damage the stud threads. Align the handholds for valve access and slide the outer dual wheel over the studs, again being careful not to damage the stud threads.

Snug the nuts in sequence, do not tighten them fully until all have been seated. Tighten the nuts to 500 ft. lbs. using the sequence as shown in the illustration. The hub mount wheels use two piece flange cap nuts for both front and rear applications. No inner cap nuts are required.

Torque the Nuts Properly:

- Tighten the wheel nuts to the recommended lug nut torque. Do not over tighten.
- Maintain the nut torque at the recommended level through planned periodic checks or at 10,000 miles intervals, whichever comes first.
- If air wrenches are used they must be periodically calibrated for the proper torque output. Use a torque wrench to check the air wrench output and adjust the line pressure for the correct torque.

SPECIFICATIONS - DIMENSIONS CHART

MODELS	34H	34Y	36R	36Z
Wheelbase	204”	204”	228”	228”
Overall Length	34’ 4”	34’ 4”	34’ 4”	36’ 4”
Overall Height with A/C	12’ 0”	12’ 0”	12’ 0”	12’ 0”
Interior Height	6’ 6”	6’ 6”	6’ 6”	6’ 6”
Interior Width	94.5”	94.5”	94.5”	94.5”
Exterior Width	100.5”	100.5”	100.5”	100.5”

VIEWS - *Front*

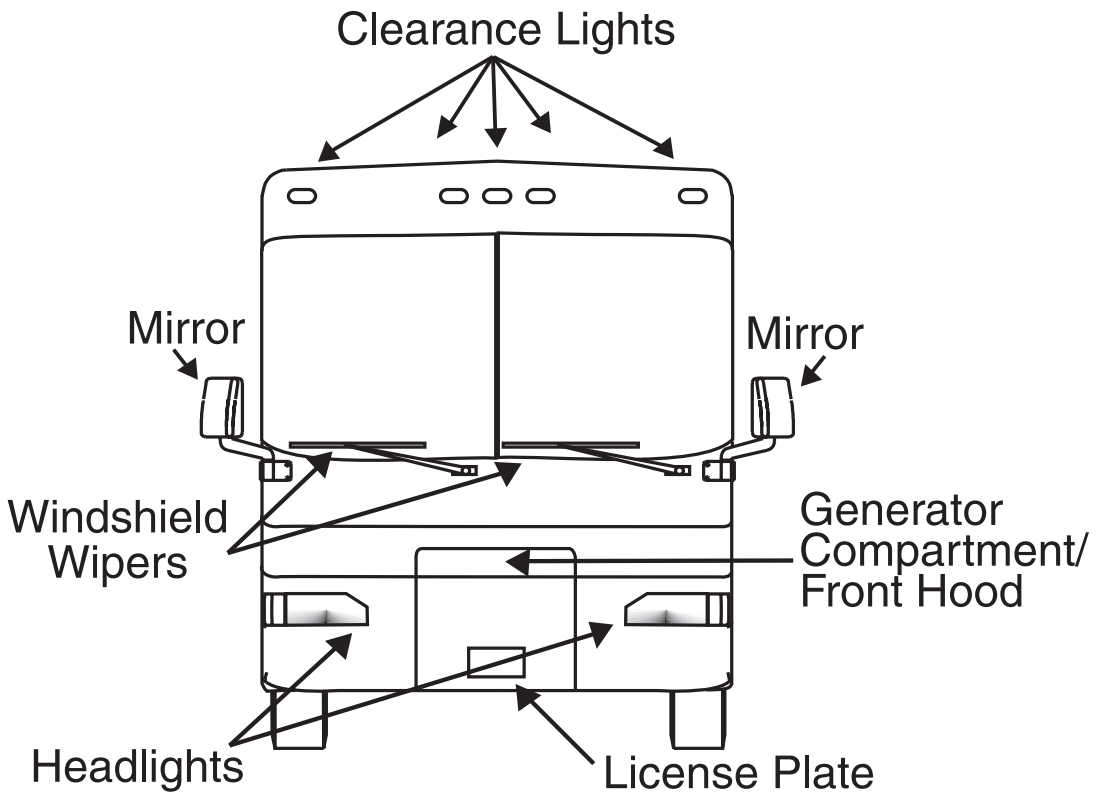

VIEWS - *Rear*

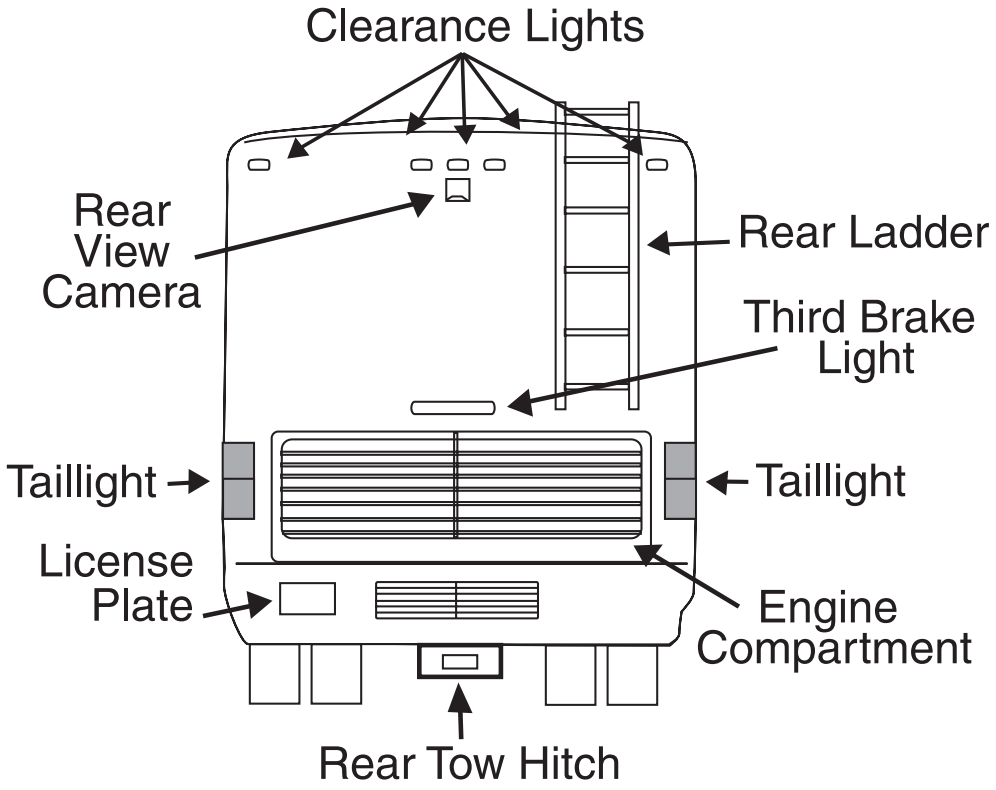

VIEWS - *Roadside*

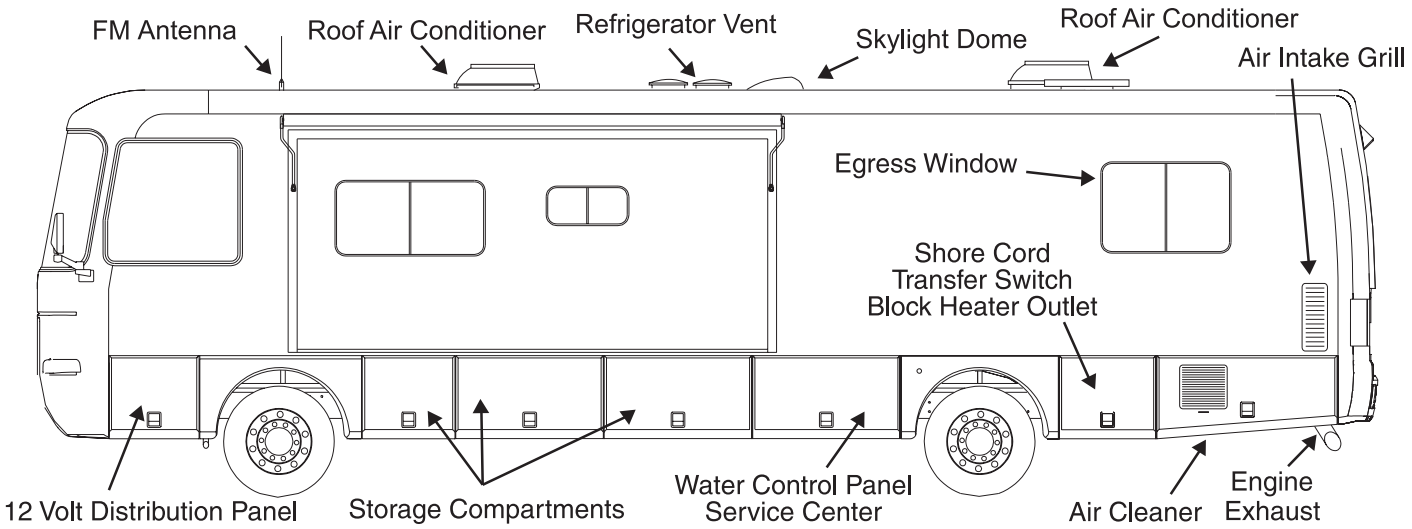

VIEWS - *Curbside*

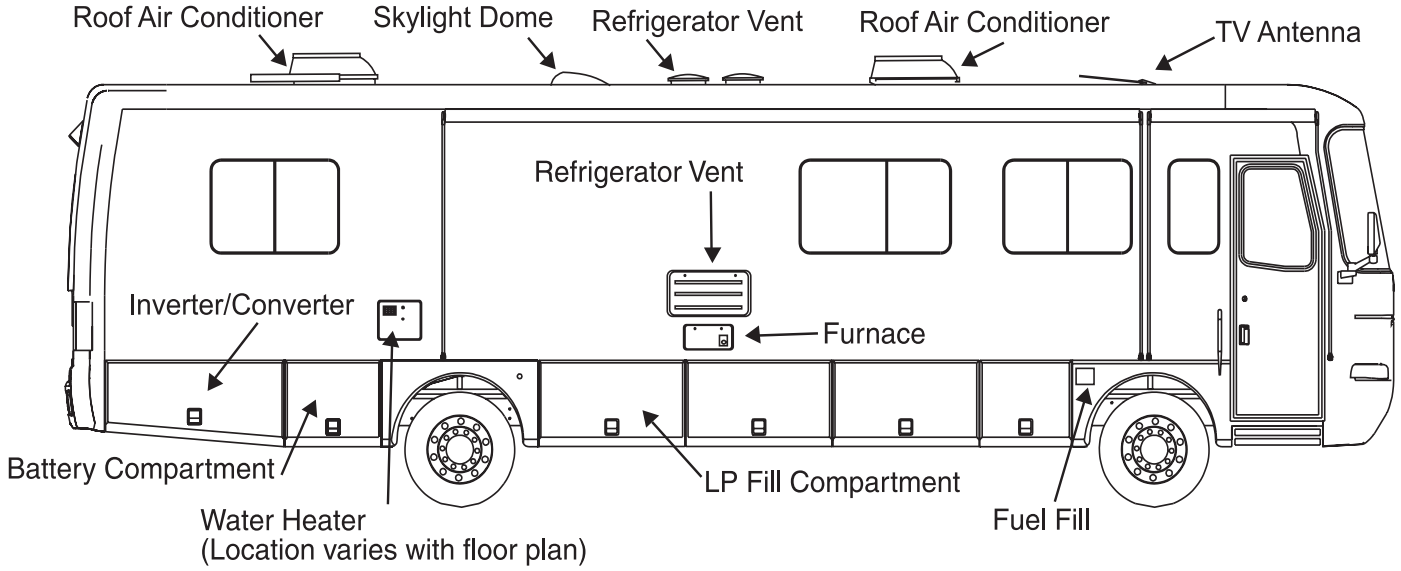

SMOKE DETECTOR

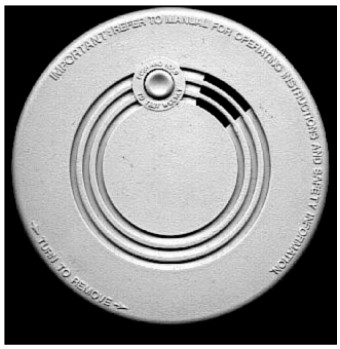

Statistics show that most fire casualties are not caused by direct flame, but by less visible smoke (products of combustion). The smoke detector responds to both visible and invisible products of combustion. The smoke detector will automatically return from alarm to normal state when the reason for activation, the presence of smoke, is completely removed. Common causes of fires are smoking in bed, leaving children unattended or using flammable cleaning fluids. Please be safety conscious and avoid unnecessary risk.

WARNING: There is no way to insure there will be no injury or loss of life in a fire; however, the smoke detector is intended to help reduce the risk of tragedy. Additional smoke detectors may help to reduce the risk. Proper use and care of the smoke detector could save lives.

How to Test

To test the electronics of the alarm, press the test button on the cover of the smoke alarm for a few seconds. The smoke alarm will sound by making a continuous loud beep. To complete the test sequence release the button and the alarm should stop.

NOTE: Test the smoke alarm operation after the motorhome has been in storage, before each trip and at least once a week during use.

Maintenance

Vacuum the slots in the cover and sides with a soft brush attachment every month. The smoke alarm should be cleaned every six months to help keep the unit working efficiently.

The battery should power the smoke alarm for at least one year under normal use. When the battery reaches the end of its normal life a low battery warning (intermittent beeping) will indicate the need for battery replacement. It may be practical to replace the battery during the time changes in the spring and fall.

Troubleshooting

If the alarm does not sound when the test button is pushed, or with a smoke test, try the following:

- Inspect for obvious damage.
- Check for the recommended battery type.
- Check the battery for proper connection or replace the battery if needed.
- Gently vacuum as recommended.

If these procedures do not correct the problem, do not attempt repairs. If the smoke alarm is within the warranty period and the terms indicate the nature of the problem, return the unit to your dealer. Smoke detectors beyond the warranty period cannot be economically repaired.

Abnormal air conditions may cause the highly sensitive smoke alarm to give a false alarm. If no fire is apparent ventilate the room and/or blow fresh air into the motorhome until the alarm stops. Once cleared, the smoke alarm will automatically reset. Dust can lead to excessive sensitivity. Vacuum as needed.

LP-GAS DETECTOR

Provided for safety is a gas detector. This gas detector will detect both LP-Gas and methane gas. Liquefied Petroleum (LP) Gas is heavier than air, methane gas is lighter than air. LP-Gas will settle to the lowest point, generally the floor of the motorhome. Methane gas will rise. The gas detector is also sensitive to other fumes such as hair spray, of which most contain butane as the propellant. Butane, like propane, is heavier than air and will settle to the floor level where it will be detected. When this occurs, press reset button to stop the alert sound for 60 seconds.

The other combustibles which will be detected include alcohol, liquor, deodorants, colognes, perfumes, wine, adhesives, lacquer, kerosene, gasoline, glues, most cleaning agents and propellant of aerosol cans. Most are lighter than air in their vapor state and will only be detected when the motorhome is closed up.

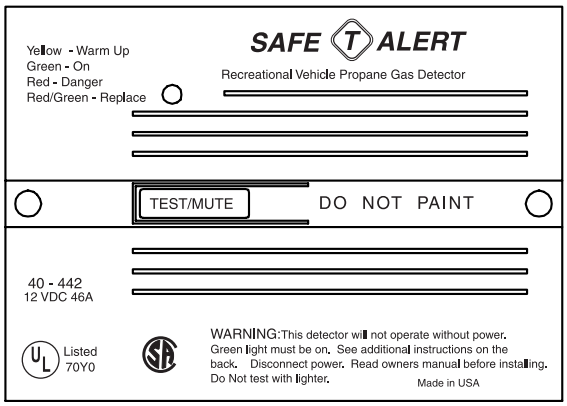

LP-Gas Detector

Operation

Upon first application of power the LED will flash **yellow** for three minutes while the detector is stabilizing. At the end of the start cycle the LED will turn **Green**, indicating full operation. If the detector senses unsafe levels of gas it will immediately sound an alarm. The gas detector operates on 12 Volt DC, with a current draw less than 1/10th of one amp.

CAUTION: The detector will not alarm during the three minute warm up cycle.

Testing

Press the **TEST** switch any time during the warm up cycle or while in normal operation. The LED should flash **red** and the alarm should sound. Release the switch. This is the only way the detector should be tested. The test feature checks full operation of the detector.

WARNING: Test the operation of this detector after the motorhome has been in storage, before each trip and at least once per week during use.

Alarm

The **red** LED will flash and the alarm will sound whenever a dangerous level of propane or methane gas is detected. The detector will continue to alarm until the gas clears or the **TEST/MUTE** switch is pressed.

Procedures To Take During An Alarm:

1. Turn off all gas appliances, (stove, heaters, furnace), extinguish all flames and smoking material. Evacuate, leave doors and windows open.
2. Turn off the propane tank valve.
3. Determine and repair the source of the leak. Seek professional help if necessary.

CAUTION: Do Not re-enter until the problem is corrected.

Alarm Mute:

Press the **Test-Mute** button when the detector is in alarm.

1. The **red** LED will continue flash and the alarm will beep every 30 seconds until the gas level has dropped to a safe level.
2. The LED will flash **green** until the end of the **MUTE** cycle.
3. If dangerous gas levels return before the end of the **MUTE** cycle, the alarm will beep four times and return to phase 1.
4. After two minutes the detector will return to normal operation (**solid green**) or resound the alarm if dangerous levels of gas remain in the area.

Fault Alarm:

Should the microprocessor sense a fault in the gas detector, a fault alarm will sound twice every 15 seconds. The LED will alternately flash **red** to **green** and the **MUTE** switch will not respond to any command. The gas detector must be repaired or replaced.

Care

1. Vacuum the dust off the detector cover weekly (more frequently in dusty locations) using the soft brush attachment of your vacuum.
2. Do not spray cleaning agents or waxes directly onto the front panel. This action may damage the sensor, cause an alarm or cause a detector malfunction.

CARBON MONOXIDE DETECTOR

The motorhome is equipped with a carbon monoxide detector. Carbon monoxide (CO) is a colorless, odorless and tasteless gas. Even low levels of CO have been known to cause brain and other vital organ damage in unborn infants, with no effect on the mother. In cases of mild exposure the symptoms may include: a slight headache, nausea, vomiting and fatigue. Symptoms for medium exposure may include a severe throbbing headache, drowsiness, confusion and fast heart rate. Extreme exposure can result in unconsciousness, convulsions, cardio-respiratory failure and death. Young children and household pets may be the first effected. The CO detector is designed to detect the toxic CO fumes that result from vehicle exhaust and incomplete combustion sources like a furnace, gas stove or water heater. Consequently, it is uncommon for household smoke from cigarettes or normal cooking to cause the alarm to sound.

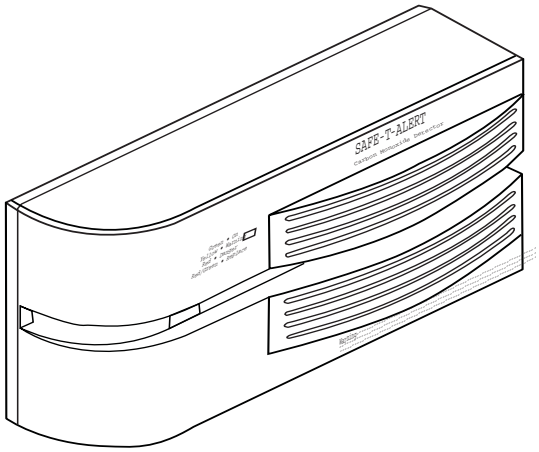

Carbon monoxide detector.

NOTE: Activation of this device indicates the presence of carbon monoxide (CO) which can be fatal. A concentration of above 100 PPM will cause a warning condition. Individuals with medical problems may consider using detection devices with lower carbon monoxide alarming capabilities. Prolonged exposure to the horn at a close distance may be harmful to your hearing.

Operating Instructions

The detector is equipped with a self-cleaning CO sensor and requires a ten minute initial warm-up period to clean the sensor element and achieve stabilization. The green power light should be lit when the power is on. If the light is not lit, turn off the power and check all wire connections. If the power is on and the connections are correct but the indicator still does not light, the detector should be returned for service. Do not attempt to fix the detector. The indicator light displays a specific color to monitor the conditions as follows:

- **Green -** Indicates **ON** or normal condition. The CO detector has power and is sensing air for the presence of CO gas. The alarm horn will not sound.
- **Yellow -** Indicates a "**trouble**" or malfunction condition. The alarm horn will sound and cannot be reset by the **TEST/RESET** button. The CO detector is not working properly and must be immediately replaced or repaired.
- **Red -** Indicates an "**alarm condition**." The detector has sensed the presence of a hazardous level of carbon monoxide. The alarm horn will sound continuously until the **RESET** switch is reset.

Alarm

When the alarm sounds have the detector and the motorhome checked by an authorized service technician as soon as possible. Never disconnect a CO detector to silence an annoying alarm. Evacuate the motorhome immediately when the RED light is lit and the alarm sounds. Do a head count to check that all persons are accounted for. Call the nearest fire department and ask them to determine the source of the carbon monoxide. Do not re-enter the motorhome until it has been aired out and the problem corrected.

Testing

Test the carbon monoxide detector operation after the motorhome has been in storage, before each trip and at least once a week during use. Test the alarm by holding the test button in until the alarm sounds. The alarm will stop beeping in about 30 seconds.

Cleaning

Use a vacuum cleaner to remove dust or any other buildup on the detector. Do not wash. Wipe the detector with a damp cloth and dry it with a towel. Do not open the detector for cleaning. Do not paint the detector. It is recommend that the carbon monoxide detector be replaced every 10 years.

FIRE EXTINGUISHER

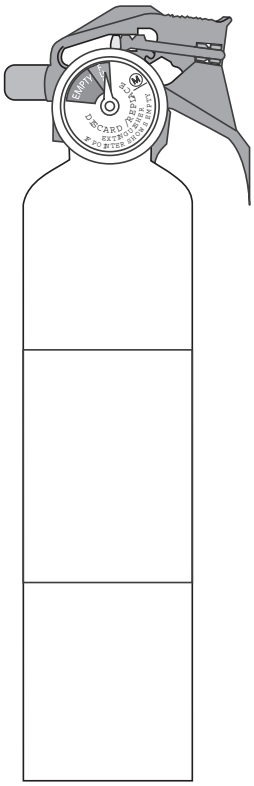

The fire extinguisher in the motorhome is located near the main entrance door. Please read the operating instructions that are printed on the fire extinguisher. If there is any doubt on how to operate the fire extinguisher, you and your family should practice using it. Be sure to replace or recharge the extinguisher immediately after use.

Inspect the fire extinguisher at least once a month. Do so more frequently if the extinguisher is exposed to weather or possible tampering. Do not test the extinguisher by partially discharging, this will cause a loss of pressure.

Use the <u>PASS</u> word!

<u>P</u>ull the pin to unlock the extinguisher.
<u>A</u>im at the base (bottom) of the fire and stand 6-10 feet away.
<u>S</u>queeze the lever to discharge the agent.
<u>S</u>weep the spray from left to right until totally extinguished.

EGRESS EXIT WINDOW

An egress window is designated for use as an exit in the case of an emergency. Inside the motorhome the egress window is easily identified by the red locking handle. It is also marked as an “EXIT”. Outside of the motorhome, the egress window is identified by hinges along the top of the window. The glass slider in the egress window operates the same as all other windows. To open the egress window, lift the red handle and push outward on the window. Pull the window closed and lower the handles to lock the egress window.

The egress window should be opened twice a year to ensure proper operation. Over time, the rubber seal will tend to stick to the egress window. Occasional operation will help prevent the rubber seal from sticking.

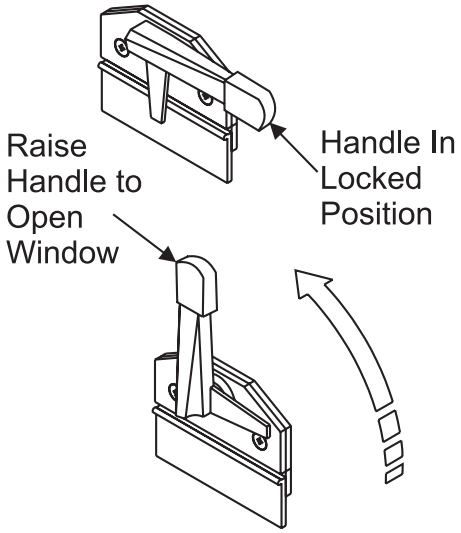

Egress Window Handle

NOTES

AMBASSADOR

SECTION 3
CARE & MAINTENANCE

3

EXTERIOR CARE

Corrosion

The most common cause of corrosion to the motorhome is the accumulation of road salts, grime and dirt. These elements, combined with moisture, may possibly cause early component failure. Salt air and fog from coastal trips can greatly accelerate the corrosion process. Corrosive materials collected from roadways accumulate on the undercarriage, around wheel openings and on the radiator charge air cooler package. These areas need to be cleaned periodically to help prevent component failure due to corrosion. If the motorhome is driven in areas where road salts are used it should be washed at least once a week. Otherwise, it is recommended to hose off the undercarriage area at least once a month to help minimize the corrosion process. High pressure washers or steam cleaners are the most effective way of cleaning off the underside and inside wheel openings. **Avoid directly spraying the painted surface with a high pressure washer.** Remove road debris and mud that has accumulated. Material left behind can intensify the corrosion problem.

> **CAUTION: Exercise caution when cleaning the radiator charge air cooler package. Damage to the fins can result when using a high pressure washer or steam cleaner. Nozzle discharge pressure can exceed 1,800 psi. Avoid using high pressure steam cleaners on the exterior paint surfaces. Remove all spattered washing debris from the exterior paint surfaces as soon as possible.**

Washing

The life of the exterior paint finish can be extended if properly cared for. Periodic cleaning will help preserve the paint finish. The motorhome is painted with a “base coat, clear coat system.” The clear coat is a polyurethane based material which brings out the shine or luster to the base coat paint. Care should be used when washing the motorhome. Use only mild detergents or preferred specifically designed automotive detergents. Avoid using abrasive cleansers or laundry detergents as they will scratch the clear coat and leave a soap film. The use of specially designed automotive washing utensils such as soft bristle brushes are acceptable, as long as they do not trap abrasive material and scratch the surface while being used. Before washing the motorhome, remove most of the accumulated dirt and “road wash” behind wheel openings, below the windshield and on the rear of the motorhome. If the build up is excessive, run water over a soft brush while gently scrubbing the surface in one direction. This will help float away the “build-up” from the clear coat. Avoid back and forth or circular motions as this may act like sandpaper, scratching the clear coat and leaving a haze or “swirl marks.” After removing the heavy build-up, use the mixed detergent solution to wash the motorhome. Start washing at the top of the motorhome working towards the bottom. If possible, wash the motorhome in a shaded area when the exterior is not hot to the touch. If necessary, turn the motorhome around to keep the area being washed in the shade. Try not to allow the detergent to dry onto the clear coat surface. Use plenty of water when rinsing the surface to remove any detergent residue.

Drying

Drying chamois cloths come in natural and synthetic materials. Either type is acceptable as long as the surface is clean. Soak the chamois in clean water until all chamois material has absorbed water. Wring excess water from chamois. Start at the top and work towards the bottom. Use a downward "S" pattern to remove water from the surface and wring out the chamois as needed. Using a chamois cloth to remove the rinse water is not necessary, but the effort can be worthwhile.

Waxing

To wax or not to wax? This is a good question. There are many schools of thought on this issue. The two most common thoughts are:

- The clear coat needs to "breathe." A layer of wax will seal the clear coat not allowing it to breathe, possibly leading to failure of the clear coat.
- If the surface is not waxed, what is protecting the surface from the environment (road salts, acid rain, road tar, ultraviolet light)?

It is recommended to wax the motorhome twice a year: spring and fall. Many types of protective barriers are available today that may be applied to the clear coat: glazes, waxes, polishes, rubbing compounds or combinations of these products.

NOTE: When selecting a product for use follow the product manufacturer's recommended application instructions.

Types of Products:
Glazes: Glazes are generally used to fill very fine scratches in the clear coat, being applied either by hand or by using a polisher with a special pad.

Waxes: Waxes come in many types of chemical make-ups. The popular Carnauba wax is a natural occurring wax from the leaves or fronds of the Carnauba palm tree. Mineral waxes have a paraffin base. There are also other topical application products which contain silicone.

Polishes: Polishes usually contain a combination of wax based substances with an abrasive, getting the two for one idea. These products can be too abrasive for clear coats and are not recommended for use.

Rubbing Compounds: These types of products are generally applied by using a buffer. The use of rubbing compounds should be left to professionals as undesired results can quickly occur. These types of products are generally used to correct or flatten a surface by removing high spots or small amounts of material.

When selecting a product the container should be marked, "safe for clear coats" or "clear coat safe." Carefully follow all manufacturer's application instructions when using a product. Upon first use of a product, try it on a "small test spot" in an inconspicuous area in case an undesired reaction occurs.

Observe the test area from different angles checking for hazing or swirl marks. If an abnormal reaction to the finish occurs, discontinue product use and consult the product's manufacturer. If the product is a paste, do not allow dried paste to be baked on by the sun. Remove paste shortly after drying. Clean, dry, 100% cotton cloths or cotton baby diapers are best suited for the removal of dried paste. Turn the cloth often. Use a separate clean cloth to buff. The surface should feel "slick" when rubbing the cloth lightly over it. Avoid repeated wax applications which can cause wax to build up. Some very fine scratches or swirl marks may be removed by an application of a glaze. These types of glazes fill the scratches or swirl marks.

The motorhome has a large surface area. Washing and waxing may not be completed in one afternoon. Select sections to wax until the motorhome is complete. If the task seems overwhelming, have an automotive detailer perform the task.

Tire Care

Road oil will cause deterioration of the rubber. Dirt buildup will help hold chemicals in the air next to the tire and will also cause deterioration.

When cleaning any rubber product, proper care and methods in cleaning must be used to obtain the maximum service years out of the tires. Use a soft brush and a mild detergent to clean the tires. If a dressing product is used to "protect" the tires from aging, use extra care and caution. Tire dressings that contain petroleum products or alcohol may cause deterioration or cracking.

In many cases it is not the dressing that causes a problem but the chemical reaction that subsequently occurs. When these same dressing products are used on a passenger car tire that is replaced every three to four years, it is rare to see a major problem. However, in most cases recreational vehicle tires may last longer due to limited annual mileage and exposure.

Bright Metal

All chrome, stainless steel and aluminum should be washed and cleaned each time the motorhome is washed. Use only automotive approved non-abrasive cleaners and polishes on exterior bright work. Aluminum wheels should be cleaned regularly with a non-abrasive cleaner recommended for aluminum wheel care. Do not use rubbing compounds.

NOTE: When using chemicals to remove road tars, use only automotive type products that are recommended for use on painted surfaces and fiberglass. Observe the warning recommendations and directions printed on the container of any agent being used.

Maintenance - Exterior

The motorhome is subject to a great deal of outside conditions. While the coach is parked it is exposed to extreme temperatures, humidity, ultraviolet rays, acid rain and other organic environmental conditions. While in operation the coach is subject to twisting and flexing caused by (for example) going in and out of driveways, bouncing through potholes and driving through winding mountain roads.

Periodic inspections of the fiberglass exterior may reveal minute cracks in the surface commonly called “spider cracks” or “hairline cracks” which are caused by the flexing of the fiberglass exterior. These are normal. If a crack represents a threat to the integrity of the fiberglass it will open up and the weave of the cloth would be visible. If the exterior has been damaged, prevent moisture penetration, especially in freezing climates. Cover the area as quickly as possible. Use plastic sheeting and tape, if necessary, so that moisture will not get into the motorhome and damage the interior.

Roof Care & Seal Inspections

Periodic resealing of the joints and seams is necessary to prevent the entrance of moisture into the motorhome. Enough emphasis cannot be placed on this issue. Extreme damage from a water leak can occur rapidly. Never leave the vehicle unattended with the slide room extended. If the vehicle is to be stored outside throughout the winter months, a full interior inspection for water leaks should be made bi-monthly. Extensive sealing has been done at the factory; however, the normal twisting and flexing that occurs while traveling may have compromised a seal or seam. All joints and seams should be inspected at least twice a year and recalked as necessary. Special attention should be directed toward the roof air conditioning seals, ceiling and plumbing vents, skylights, roof mounted antennas, windows, door molding, clearance lights and the belt-line molding. Specific sealant products should be used in the areas for which they were designed. These items can be obtained from recreational vehicle parts suppliers. Listed below are some of the more common sealants and the areas in which they are used. Approved sealants are available at service centers and authorized dealers.

WARNING: Some products may contain hazardous materials which require special handling. Read labels carefully. Follow all of the product manufacturer’s safety requirements.

Sealant Types:

Acryl-R:

Acryl-R is used on all roof openings such as vents, skylights, any roof mounted antennas and ladder roof mounts. The sealant should be applied only where the equipment bases meet the roof. Clean the old sealant that is lifting before applying with new. Make sure

the roof is dry and free of dirt. This product is usually found in a caulking tube. Care should be used when near an edge, as the product will spread out. Masking tape may be used to mask around area to avoid mishaps. The roof air conditioners use a closed cell foam base gasket. No sealants are required. The roof air conditioners should be checked for tightness by the four mounting bolts located in each interior corner of the air conditioner roof opening. Torque specification is 40-50 in/lbs. The base gasket should be compressed to approximately ½”.

Clear Silicone Sealant:
Primarily this product is used on the sidewalls where a hole has been made and an item installed. This includes Windows, Doors, Handles, Beltline Molding, Latches and around bases of items surface mounted such as clearance lights. Old peeling sealant should be removed. Avoid using metal utensils which can scratch the painted surface. Use nylon sticks or equivalent. Avoid using lacquer thinners or ketone based solvents as these chemicals can damage the painted surfaces. Be sure the surface is clean and dry before application. Cut the tube at an angle with smallest usable opening. Avoid a heavy bead as a little goes a long way. Use finger at a 45° angle on beaded surface to smooth out product. Do not moisten finger, use a disposable latex glove. Keep rags or paper towels handy for clean up. Use care when applying silicone. Plan ahead before starting a bead, look for obstacles that may impede application.

Black Urethane:
This product is used for sealing the windshields. It was not designed to fill holes or other imperfections. Black urethane comes in a tube and it applies much the same way as silicone does. Clean up using solvents such as paint thinner. Gloves are required as this material is hazardous.

Acrylic Sealants (geocel 2300):
This product is used where items are sealed under a painted surface such as the metal corners of the slide out room. The material is specially formulated to allow paint adhesion.

Spray Foam:
This product is used as a sealant where a hole has been made for items such as water lines or wires that are coming through a floor opening.

INTERIOR CARE
Fabrics

The fabrics have been manufactured with the same quality you would expect to find in a furniture store. If the fabric is abused, it can be damaged. Special care needs to be taken when your motorhome is exposed to a very humid climate for an extended period of time. Cover all upholstery and make sure window coverings are down to protect from sun damage.

Protect the fabric from any unnecessary exposure to moisture. The sofa, pillows, dinette cushions, living area chair, driver/passenger seating and window treatments have been treated with *Scotch Guard* to prevent overall water spots and soiling. Frequently used items will wear accordingly and may require more attention than those items not regularly used.

Use the following guidelines for cleaning your upholstery fabrics:

- Water-based cleaners are not recommended.
- If a spill does occur, blot the soiled area. Do not rub it.
- Some solvents are not recommended since they may have an adverse reaction on specific backings of your upholstery fabric.
- To prevent overall soiling, frequent vacuuming or light brushing are recommended to remove dust and grime.
- Clean spots using a mild water-free solvent or dry cleaning product.
- Clean only in a well ventilated area and avoid any product containing carbon tetrachloride or other toxic materials.
- Use a professional furniture cleaning service for an overall cleaning.

Fabric Cleaning Codes:

The codes listed below refer to cleaning instructions recommended by the fabric manufacturer for specific fabrics. The “Fabric Specification Charts” (located on the following pages) list specific fabric codes under “Cleaning Code.”

“W” - Clean this fabric with the foam only of a water-based cleaning agent to remove the overall soil. Many household cleaning solvents are harmful to the color and life of a fabric. Cleaning only by a professional furniture cleaning service is recommended. To prevent overall soil, frequent vacuuming or light brushing to remove dust and grime is recommended.

“S” - Clean this fabric with pure solvents (petroleum distillate-based products such as *Energine*, *Carbona*, *Renuzit*, or similar products may be used) in a well ventilated room. Cleaning only by a professional furniture cleaning service is recommended.

CAUTION: Use of water-based or detergent-based solvent cleaners may cause excessive shrinking. Water stains may become permanent and unable to be removed with solvent cleaning agents. Avoid products containing Carbon Tetrachloride as it is highly toxic. To help prevent overall soiling, frequent vacuuming or light brushing to remove dust and grime is recommended.

"S/W" - Clean this fabric with the foam only of a water-based cleaning agent or with a pure solvent in a well ventilated room (petroleum distillate-based products such as *Energine*, *Carbona*, *Renuzit,* or similar products may be used). Cleaning only by a professional furniture cleaning service is recommended. To help prevent overall soiling, frequent vacuuming or light brushing to remove dust and grime is suggested.

"P" - The article is resistant against perchlorethene, cleaning benzine (spirit), white spirit, R-11 and R-13.

"Dry Clean Only" - Cleaning only by a professional dry cleaner or furniture cleaning service is recommended for this fabric.

***Machine Washing for 100% Polyester:**
"Wash Cycle" - Use synthetic setting and high water level with mild agitation. A mild soap or detergent in water not to exceed 160º F.
No bleach or fabric softener.

"Drying" - Use low temperatures, a synthetic setting of 85º F to 90º F maximum should be used. Do not exceed three to five minutes time on the synthetic cycle. If washed at 160º F, the maximum temperature which can be used to dry is 140º F. Hang or fold immediately after drying.

"Finishing" - If necessary, press as following:

- Iron on low setting (275° F) with damp cloth or steam iron using a dry press cloth.
- Grid Head press for short intervals with minimum steam. Do not lock the head.
- Flat bed press dampened drapery using cloth covering.
- Avoid prolonged contact with heat.

Fabric Specification Charts

FABRIC	CONTENT	CLEANING CODE	WHERE USED
CROWN JEWEL .276			
4608 3” Tassel SBI	100% Olefin	SW	LR & BR Pillow Tassels
Amy Taspestry	41% Polyester 41% Acrylic 18% Cotton	W	Sofa, Dinette Cushion, LR Valance
Avalon Sandune	65% Rayon 35% Acetate	Dry Clean Only	Windshield Privacy Drape
Jody Jewel	63% Cotton 19% Polyester 18% Acrylic	SW	Dining Chair
Julia Heather	100% Cotton	Dry Clean Only	Bedspread, Sham, BR Pillow, BR Valance
Kennedy Ditsy II Regal 28066-ASLU	55% Polyester 45% Acrylic	Dry Clean Only	Chair, LR Valance
Supreme Satin Aubergine	69% Rayon 31% Acetate	Dry Clean Only	LR Pillow, BR Pillow, Headboard, BR Valance
GAZEBO .278			
4608 3” Tassel SBI	100% Olefin	SW	LR & BR Pillow Tassels
Avalon Sandune	65% Rayon 35% Acetate	Dry Clean Only	Windshield Privacy Drape
Comander Mica	54% Cotton 46% Polyester	W	Sofa, Dinette Cushion, LR Valance, Dinette Chair
Lyric - R Seagreen	96% Olefin 4% Polyester	SW	Chair, LR Valances
Nishi Denim	100% Cotton	S	Bedspread, Sham, BR Pillow, BR Valance
Supreme Satin Aubergine	65% Cotton 35% Polyester	Dry Clean Only	LR Pillow, BR Pillow, Headboard, BR Valance

FABRIC	CONTENT	CLEANING CODE	WHERE USED
ROYALTY .277			
4608 3” Tassel SBI	100% Olefin	SW	LR & BR Pillow Tassels
Avalon Sandune	65% Rayon 35% Acetate	Dry Clean Only	Windshield Privacy Drape
Caldwell Mystic 28472-A3GU	50% Polyester 48% Acrylic 2% Nylon	Dry Clean Only	Sofa, Dinette Cushion, LR Valance
Caldwell Plain Mystic 28473-AIUU	50% Polyester 48% Acrylic 2% Nylon	Dry Clean Only	Dining Chair
Mallard D-Slate	100% Cotton	Dry Clean Only	LR Pillow, BR Pillow, Headboard, BR Valance
Netherland Chambray	57% Cotton 43% Polyester	Dry Clean Only	Bedspread, Sham, BR Pillow, BR Valance
Saab Ditsy Khaki 26177-A5GU	71% Rayon 29% Polyester	Dry Clean Only	Chair, LR Valance

VINYL	WHERE USED	CLEANING
CROWN JEWEL .276		Follow cleaning instructions for ***Vinyl*** under **INTERIOR CARE.**
Brunswick New Oyster	Vinyl	
GAZEBO .278		
Brunswick New Oyster	Vinyl	
ROYALTY .277		
Brunswick New Oyster	Vinyl	

* See instructions for “Machine Washing 100% Polyester” under ***Fabric Cleaning Codes***.
LR = Living Room BR = Bedroom FSD = Free Standing Dinette

Vinyl

Several areas of the motorhome can be covered in vinyl, such as the dash and items of furniture. The care and cleaning of these areas are outlined in the Morbern Vinyl section below.

Morbern Vinyl:
Vinyl requires periodic cleaning to maintain its neat appearance and to prevent the buildup of dirt and contaminants that may permanently stain and/or reduce the life of the vinyl if they are not removed. The frequency of cleaning depends upon the amount of use and the environmental conditions in which the vinyl is subjected. The procedures used for cleaning are dependent upon the end-use circumstances.

Normal Cleaning:
Most common stains can be cleaned using warm soapy water and clear water rinses. Moderate scrubbing with a medium bristle brush will help to loosen soil from the depressions of embossed surfaces. For stubborn stains use the following commercially available mild detergents in accordance with the manufacturer's instructions: *Mr. Clean* or *Fantastik*. Full strength rubbing alcohol or mineral spirits may be tried cautiously as a last resort on very stubborn stains if the above suggestions do not work. Indiscriminate use of any solvent, or solvent containing cleaner, can severely damage or discolor the vinyl. Stains may become permanent if they are not removed immediately. The procedure for removal of the more severe staining agents are outlined below.

NOTE: Detergents should never be used on a regular or repeated basis for normal cleaning.

CAUTION: Powdered cleaners containing abrasives, steel wool and industrial strength cleaners are not recommended for Morbern vinyl.

Bird Excreta & Vomit Stains:
Sponge the area with soapy water containing a diluted bleach until the stain is removed. Rinse thoroughly with clean water.

Urine Stains:
Sponge them with soapy water containing a small amount of household ammonia. Rinse thoroughly with clean water.

Surface Mildew:
Wash with diluted bleach and use a soft brush for stubborn growth. Rinse repeatedly with clear, cold water.

CAUTION: Lacquer solvent will cause immediate irreparable damage to the vinyl. Do not use wax on any vinyl upholstery, as it will cause premature embrittlement and cracking. Dilute chlorine bleach before using. Never use full strength bleach. If flammable solvents such as alcohol, turpentine, or varsol are used for cleaning, use only small quantities while in a well-ventilated area. Exercise proper caution by notifying any persons in the area. Keep away from any ignition source. Always wear protective gloves.

Ballpoint Ink:
Permanent Marker Ink spots will stain the vinyl permanently. Wipe the stain immediately with rubbing alcohol in a well ventilated area to remove much of the stain.

Oil-Base Paint:
Use turpentine in a well ventilated area to remove any fresh paint. Dried paint must be moistened using a semi-solid, gel-type stripper. The softened paint can be gently scraped away. Rinse with soap and water.

NOTE: Paint strippers will remove the print pattern and damage the vinyl if it comes in direct contact.

Latex Paint:
Fresh paint can be wiped off with a damp cloth. Hot soapy water will normally remove dried latex.

Tar or Asphalt:
Remove immediately, as prolonged contact will result in a permanent stain. Use a cloth lightly dampened with mineral spirits and rub the stain gently, working from the outer edge of the stain toward the center to prevent spreading. Rinse with soap and water.

Crayon, Mustard or Ketchup:
Sponge with mild soap and water. For stubborn stains that may have set, use a cloth soaked in diluted mild detergent with gentle rubbing. Any remaining stain should be washed with diluted bleach. Rinse repeatedly with cold water.

Chewing Gum:
Scrape off as much gum as possible using a dull knife. Rub the gum with an ice cube to harden it and make it easier to remove. In a well ventilated area, use a cloth saturated with mineral spirits and gently rub the remaining gum. Rinse thoroughly with clean water.

Lipstick, Grease, Oil, Make-Up or Shoe Polish:
Apply a small amount of mineral spirits with a cloth. Rub gently. Be careful not to spread the stain by smearing it beyond its original source. Remove shoe polish immediately as it contains a dye which will cause permanent staining. Rinse thoroughly with clean water.

Candy, Ice Cream, Coffee, Tea, Fruit Stains, Liquor, Wine, Tanning Lotion or Soft Drinks:
Use lukewarm water and sponge repeatedly. Any loose material should be gently scraped with a dull knife. Any soiled area that remains after drying should be gently rubbed with a cloth, dampened with a mild detergent solution. Rinse thoroughly with clean water.

Blood or Plant Residue:
Rub out any spots with a clean cloth soaked in cool water. If stubborn spots remain use household ammonia and rinse repeatedly with a clean, wet cloth. Do not use hot water or soap suds as this will set the stain.

NOTE: Vinyl requires periodic cleaning to maintain its appearance and to prevent the buildup of dirt and contaminants that may permanently stain or reduce the life of the vinyl if left untreated. The frequency of cleaning and procedures used depend upon the amount of use and the environmental conditions in which the vinyl is subjected to. Vinyl tears or holes can be temporarily covered with clear "office" tape to prevent further damage. Repairs should be made by a professional upholstery shop. Commercial repair products may contain lacquers and cause the vinyl to become brittle and more difficult to repair.

Naugahyde Leather

Naugahyde Leather is a vinyl coated fabric. Use the following care and cleaning methods to ensure long lasting beauty of the fabric. For best results stains should be removed immediately. The longer a stain is allowed to set, the more difficult it becomes to remove it. Always use a clean, soft, damp cloth when cleaning the fabric.

Light soiling:
- A solution of 10% liquid dish soap and warm water applied with the soft damp cloth will remove most soiling.
- Use a solution of liquid cleanser and warm water applied with a soft bristle brush, if needed. Wipe away the residue with the soft cloth.

Difficult stains:
- Mix a solution of one part bleach to four parts water.
- Dampen the soft cloth and rub gently.
- Rinse with a water dampened cloth to remove the residue.
- It may be necessary to allow the solution to puddle on the affected area for 30 minutes. Rinse using a water dampened cloth to remove the residue.

CAUTION: This method should be attempted on an inconspicuous spot prior to using on the effected area. Never use harsh solvents or cleanser intended for industrial use.

Stains such as lipstick, crayon, felt tip pen, ball point pen, mustard and certain dyed suntan lotions must be cleaned immediately. The longer these and other harsh or permanent stains are exposed to the fabric the more difficult they will be to clean. Other cleaning methods and cleaning agents may be attempted in an inconspicuous area to determine possible damage to the fabric.

Floors - Carpet Cleaning

Spot Removal Procedures:

- Act quickly when anything is dropped or spilled. Remove spots before they dry.
- Blot liquids with a clean, white absorbent cloth or paper towel.
- For semi-solids, scoop up with a rounded spoon.
- For solids, break up and vacuum out as much as possible.
- Pretest the spot removal agent in an inconspicuous area to make certain it will not damage the carpet or its dyes.
- Apply a small amount of the cleaning solution recommended for the particular spot. Do not scrub. Work from the edges of the spot to the center. Blot thoroughly. Repeat until spot is removed.
- Follow steps on the Carpet Spot Removal Guide.
- After each application, absorb as much as possible before proceeding to the next step.
- Absorb remaining moisture with layers of white paper towels, weighted down with a non-staining glass or ceramic object.
- When completely dry, vacuum or brush the pile to restore texture.
- If the spot is not completely removed, contact a professional carpet cleaner.

Cleaning Solutions

(A) Dry Cleaning Fluid: A nonflammable spot removal liquid, available in grocery and hardware stores.

(B) Nail Polish Remover: Any acetate, which often has a banana fragrance. Do not use if it contains acetone.

(C) Detergent Solution: Mix two cups of cold water and 1/8 teaspoon mild liquid detergent (no lanolin, non-bleach).

(D) Warm Water: Lukewarm tap water.

(E) Vinegar Solution: One cup white vinegar to one cup water.

(F) Ammonia Solution: One tablespoon household ammonia to one cup water.

Use the solution specified in order from 1-6 until stain is removed.	A DRY CLEANING FLUID	B NAIL POLISH REMOVER	C DETERGENT SOLUTION	D WARM WATER	E VINEGAR SOLUTION	F AMMONIA SOLUTION	G SPOT REMOVAL KIT	H CALL PROFESSIONAL	I PERMANENT CHANGE
SPOTS									
Acid				2		1		3	*
Acne Medication		1		2	5	4	3	6	*
Alcoholic Beverage			1	4	3	2			*
Ammonia				2	1				*
Bleach		1	2					3	*
Blood		1	3		2	4			
Candle Wax	1					2			
Cement & Glue	2	1	3		5	4	6		*
Chalk		1	2						
Charcoal		1	2						
Chewing Gum	1								
Coffee			1	3	2		4	5	*
Cosmetics		2	1	3	6	5	4	7	*
Crayon	1		2	3					
Drain/Toilet Cleaner			2	1	3			4	*
Dye	1		2		4	3	5	6	*
Food			1	4	3	2	5	6	*
Fungicides/Insecticides/ Pesticides	1		2	5	4	3	6	*	
Furniture Polish (Water Based)			1	4	3	2	5	6	*
Furniture Polish (Solvent Based)	2	1	3	6	5	4	7	8	*
Furniture Stain	2	1	3	6	5	4	7	8	*
Graphite		1	2						
Grease	1	2	3				4	5	*
Ink	2	1	3	6	5	4	7	8	*
Iodine	1		2	5	4	3	6	7	*
Lipstick	2	1	3	6	5	4	7	8	*
Medicine	2	1	3	6	5	4	7	8	*
Merthiolate			1	4	3	2	5	6	*
Nail Polish	2	1	3				4	5	*
Oil	1		2	4		3		5	*
Paint	2	1	3				4	5	*
Plant Food			1	4	3	2	5	6	*
Rust			2	3	1		4	5	*
Shoe Polish	2	1	3	5		4	6	7	*
Soft Drinks			1	4	3	2	5	6	*
Soot	1		2	3				4	*
Tar	1						2	3	*
Toothpaste			1						
Urine			1		2		3	4	*
Vomit			1	4	3	2	5	6	*

(G) Spot Removal Kit: Available from retail carpet stores or professional cleaners.

(H) Call Professional: Additional suggestions, special cleaning chemicals or the ability to patch the area might be available.

(I) Permanent Change: Due to the nature of the stain, there may be color loss. The carpet has been permanently dyed or the carpet yarns have been permanently damaged.

NOTE: While the recommended cleaning agents have proven to be effective, some stains may become permanent.

Floor - Laminate

The laminate flooring used in the motorhome provides style, durability and easy maintenance. The laminate flooring is a high pressure laminated flooring designed to be incorporated as a floating floor. The flooring material is constructed of three main components. The surface, similar to many countertops, contains aluminum oxide particles to form an extremely hard, durable surface. The carrier or core layer is constructed from high density fiberboard. A tongue and groove design will allow for a tighter bond. The backer or bottom layer is also made of laminate for balance and strength.

Care and Cleaning:

Everyday cleaning is as simple as vacuuming the floor to remove dirt and debris. A cotton string mop is recommended for occasional mopping with a minimal amount of water. Use a mixture of soap-free household cleaner and water (vinegar and ammonia both work well) for a more thorough cleaning.

- Stains should be wiped away with a damp cloth.
- Stains caused by inks or paints may require a cloth moistened with acetone (nail polish remover).
- Stains caused by gum or tar should be allowed to harden completely, then gently scraped away.
- Felt protectors on the bottom of furniture and floor mats can preserve to beauty and appearance of the flooring.

CAUTION: Abrasive cleaners and scouring pads can scratch and damage the flooring. Never wax, sand or apply lacquer to laminate flooring.

NOTE: Any unusual or unique problems can be addressed by contacting Wilsonart at (800) 433-3222.

Shower - Cleaning

Showers are susceptible to hot water and soap build up. Showers should be cleaned weekly to prevent burdensome clean-up. Using the same solution used to clean tile floors will be sufficient for the shower. However, to control mildew growth you should spray the shower with household chlorine bleach and allow it to stand for five minutes. Weekly cleaning of glass shower doors with window cleaner should maintain the shine. If you have water build up and cannot remove spots from the glass, rubbing lightly with a razor blade will remove the deposits.

To prevent excessive moisture and a continual growth of mildew, use the shower only with adequate ventilation. The sealant in a regularly used shower should be replaced once a year. To accomplish this, use a sharp instrument to remove the old sealant. Apply a new sealant, which can be found at an recreational vehicle supply store.

Ceiling - Ozite

To clean the ozite ceiling, mix a solution of 8 oz. warm water, 4 oz. white vinegar, 1 oz. bleach, and 4 oz. club soda. Spritz on and blot dry. Do not rub or scrub as this may damage the surface.

NOTE: Do not oversaturate the Ozite surface as this may damage the ceiling.

Wall Coverings

Time is very important when removing substances from wall coverings that are solvent based or contain color. Do not use abrasive cleaners containing chlorine bleach or solvents. (*Fidelity* and *Jolie* brands are recommended.) Always begin with a mild detergent or soap and warm water. To remove normal dirt clean with a soft sponge. Rinse and wipe it dry.

Care for the Satinesque Wall Covering:

Any stain should be removed as quickly as possible to minimize any reaction between the staining agent and the wall covering. Time is very important when removing substances that are solvent based or contain color. Examples: nail polish, oil, shampoo, lacquer, enamel, paint, ink and lipstick.

Always begin cleaning with a mild detergent such as soap. If necessary, move to a stronger cleaner such as household bleach, liquid household cleaners or rubbing alcohol. Before using one of the stronger cleaners test the cleaning agent on a small inconspicuous portion of the wallcovering first to make sure that the cleaner does not affect the color or gloss of the wall covering.

Normal dirt:

Remove normal dirt using a mild soap or detergent and warm water. Allow it to soak for a few minutes then rub briskly with a cloth or sponge.

Nail polish, Shellac, or Lacquer:

Remove liquid using a dry cloth. Use care not to spread the stain. Quickly clean the remaining stain with rubbing alcohol. Rinse with clean water.

Ink:
Remove immediately by wiping with a cloth dampened in rubbing alcohol. Rinse with clean water.

Chewing gum:
Rub the gum with an ice cube to cool and harden it. Gently pull off the bulk of the gum. Remove any remaining gum with rubbing alcohol.

Pencil:
Erase as much of the pencil mark as possible. Wipe any remaining marks with rubbing alcohol.

Blood, Feces or Urine:
Remove these staining substances as quickly as possible. Wash the stained area with a strong soap. If the stain does not disappear, rinse the soapy area thoroughly with clean water. Mix a solution of 50% water and 50% household bleach. Clean the stained area with the bleach solution. Rinse with clean water.

Care for the Tower Wall Covering:
Remove ordinary stains with mild soap and warm water. Sponge it on. Rinse well and dry with a soft cloth. **For special cleaning problems:** To remove ball point pen, blood, lipstick, etc., use a sponge or soft bristle brush and *Formula 409*, *Fantastik* or a similar product. Rinse well and dry. Finish cleaning by applying full strength isopropyl alcohol with a sponge or soft brush. Rinse well and dry.

Countertops

The Solid Surface was created for a lifetime of easy care. Just follow the simple guidelines listed here to keep your surfaces looking good.

Routine Care:
The motorhome countertops are finished with one type of finish: matte/satin. All solid surface sinks and bowls have the matte/satin finish. Soapy water or ammonia-based cleaners will remove most dirt and stains from all tops and bowls. However, slightly different techniques must be used to remove different stains. Follow the recommendations below.

Cleaning Countertops:
- Most dirt and stains: Use soapy water or ammonia-based cleaner.
- Water marks: Wipe with damp cloth and towel dry.
- Difficult stains: Use soft scrub and a Grey *Scotchbrite* Pad.
- Disinfecting: Occasionally wipe surface with diluted household bleach (one part water and one part bleach).

Cleaning Solid Surfaces Sink:

Occasionally clean by using *Soft Scrub Liquid Cleanser* and a Grey *Scotchbrite* Pad. Scrub the sink, rinse and towel dry. Do this as often as you feel necessary.

Removing Cuts and Scratches:

Because the beauty of the surface goes all the way through the Solid Surface, the countertops are completely renewable. Use the following instructions to remove minor cuts and scratches.

- Sand with 180 grit and then 320 grit sandpaper until the scratch is gone.
- Restore the finish using a Grey *Scotchbrite* Pad. Never sand hard in one small area. Feather out lightly to blend restoration.

Preventing Heat Damage:

The Solid Surface withstands heat better than ordinary surface materials; however, hot pans and some heat-generating appliances such as frying pans or crockpots, can damage the surface. To prevent heat damage, always use a hot pad or a trivet with rubber feet to protect the surface. In most cases the surface can be repaired if it is accidentally damaged.

Other Important Tips:

Avoid using strong chemicals on the Solid Surface such as paint removers or oven cleaners. If these come in contact with the Solid Surface quickly wash with water. Avoid contact with nail polish or nail polish remover. If contact is made quickly wash with water.

NOTE: Do not cut directly on the solid surface. Always run cold water into the Solid Surface sink when pouring boiling water into the sink.

Windows

Water Spots:

Any glass will develop water spots if the glass is not cleaned properly. A spotting effect is magnified when the glass has a reflective finish. Use a squeegee immediately after washing to reduce water spotting. To remove stubborn water stains from reflective glass we recommend *Cerium Oxide Polishing Compound*, made by C.R. Lawrence, available at most glass shops.

Condensation:

Condensation is a natural phenomenon. The amount of condensation will vary with climate conditions, particularly in relative humidity. Condensation occurs from water vapor present in the air. Each of us add more vapors by breathing, bathing, cooking, etc. Water vapor collects wherever there is available air space. When the temperature reaches the dew point, the water vapor in the air condenses and changes to liquid form.

Controlling Moisture Condensation:
Reduce or eliminate interior moisture condensation during cold weather by using the following steps:

- Partially open the roof vents and windows so that outside air can circulate into the interior. Increase the ventilation when large numbers of people are in the motorhome. Even in raining or snowing conditions the air outside will be far drier than the interior air.
- Install a dehumidifier. Continuous use of a dehumidifier is effective in removing excess moisture from the interior air. Using a dehumidifier is not a cure-all, however, it will reduce the amount of outside air needed for ventilation.
- Run the range vent fan when cooking and the bath vent fan (or open the bath vent) when bathing, to reduce water vapor. Avoid excessive boiling or use of hot water as it produces steam.
- Do not heat the motorhome interior with the range or oven. Heating with the range or oven increases the risk of toxic fumes and allows oxygen depletion. Also, open flames add moisture to the interior air increasing condensation.
- In very cold weather leave the cabinet and closet doors partially open. The air flow will warm and ventilate the interior of the storage compartments and the exterior wall surface, reducing or eliminating condensation and preventing the possibility of ice formations.

Mini-blinds

- To maintain the mini-blinds on a frequent basis, vacuum with the brush attachment or use a dusting tools (available on the market) designed specifically for mini-blinds.
- Wash the mini-blinds with mild soap and water in a tub or hang the blinds on a fence or wall and gently rinse them with a hose.
- Leave Day-Night shades in the up position when not in use to help the shades hold their shape.

STORAGE - *Short Term*

Short term storage is defined as storing the motorhome for a period of thirty days or less. Properly preparing the motorhome during periods of short term storage will make bringing the motorhome out of storage a much easier process. Winterize the plumbing system if the motorhome is stored in winter months or if stored when temperatures are below 32º F.

Checklist-Short Term Storage
- If applicable, retract the slide room(s). Do not store the motorhome with slide room(s) extended.
- Shut off all appliances. Close the LP-Gas valve.

- Remove all articles from refrigerator/freezer and clean thoroughly. Prop doors open to prevent mildew.
- The holding tanks should be drained and fresh water system winterized with potable antifreeze or winterize the plumbing system using air pressure.
- Retract and secure all awnings.
- Turn the battery cut-off switch OFF.
- If applicable, disable auto-genstart feature.
- Batteries should be stored fully charged. Batteries stored in a discharged state will readily freeze.
- If possible, park the motorhome leaving the batteries accessible. A battery may be charged or changed without moving the motorhome.
- If available, leave the motorhome hooked to shore power. Leave the main battery disconnect switches ON.
- Careful placement of a small heat source in the interior will help control moisture. Desiccate filter systems will help remove interior moisture.
- If AC power is not available turn main battery disconnect switches OFF.
- If possible, store the motorhome inside a storage building.
- If stored outside, inspect all seams and seals for possible leakage.
- Store the motorhome with a full fuel tank to help against moisture condensing at top of fuel tank.
- Vents and windows should be closed to prevent wind driven rain entrance.
- Tires should be stored at maximum inflation pressure.
- A full interior inspection for water leaks should be made bi-monthly, inspecting behind all cabinet doors and drawers.

STORAGE
- Long Term

Long term storage of the motorhome can be defined as leaving a motorhome unattended for a period of thirty days or more. A motorhome requires protection from the elements just as a house or a car would. When left out in the environment without proper storage or maintenance, a motorhome, house or car is vulnerable to the moisture and oxidation processes inherent in the environment.

There are preventative measures which should be taken and preferable situations to use when storing a motorhome. Such measures will aid in protecting and preventing a motorhome from the damaging effects caused by an accumulation of moisture.

NOTE: The natural process of moisture in the air condensing will occur with temperature changes of 30º F or more in one day. Humidity readings of 60% or greater will allow the accumulated moisture to remain for extended periods of time.

If the motorhome is stored in a location where AC power is not available:

- Turn off all the appliances.
- Turn the battery cut-off switch to the OFF position.
- If possible, situate the motorhome so the batteries remain accessible. This allows a battery to be charged or replaced without moving the motorhome.
- Charge the batteries to a full state of charge.
- Turn the main battery disconnects to OFF.
- When stored outside, use the available DC volt meters to make a quick reference check of the batteries while the motorhome is in storage. If the motorhome is stored outside solar panels may offset the parasitic loads.
- Preventative measures should be used if the voltage readings are low. By using preventative measures, taking the motorhome out of storage or moving the motorhome in case of an emergency is a much easier process.

NOTE: Batteries in a low state of charge will readily freeze. Freezing will damage the battery.

If AC power is available:

Both main battery disconnect switches will remain ON. The inverter will charge both the house and engine battery banks. A 30 amp shore power service will be more than adequate.

CAUTION: A 20 amp service using light duty extension cords and the required adapters create serious voltage losses. Line voltage loss and the resistance at each electrical connection is a hazardous combination and should be avoided. Damage to sensitive electronic equipment may result!

Type of surface to park and store the motorhome on:

- The type of surface the motorhome is parked upon will have an affect on how much moisture accumulation occurs on the chassis and flooring. Moisture can eventually seep into the interior.
- Parking the motorhome on a grass surface, with the tires supported by blocks, is a perfect situation for moisture to accumulate.
- A gravel covered parking area still allows moisture to evaporate from the ground, through the gravel and to the underside of the motorhome.

- Concrete pads seal the surface allowing better ventilation under the motorhome.
- Storage buildings with concrete floors or heated storage facilities greatly reduce the amount of moisture accumulation and protects the motorhome from moisture damage.

If the motorhome is stored outdoors:

- The interior should be heated to help prevent mold and mildew growth. Moisture removing desiccate filter systems are available from hardware and RV supply stores. Place the filter system inside the motorhome to reduce inside moisture condensation or humidity. These systems help control mold and mildew growth.
- Proper winterization of the fresh water system will prevent potential damage in extreme cold.
- Ultraviolet radiation affects soft goods and rubber products such as: privacy curtains, window shades and tires. These items should be protected.
- Cardboard templates can be made for the windows to protect these items from exposure to direct sunlight.
- Tire covers are available to protect the sidewall of the tires from cracking. Make sure the tires contain the correct air pressure. Underinflated tires can be damaged.
- Washing the exterior regularly will help control moss accumulation. The clear coat has UV protective substances. Waxing the motorhome twice a year will augment these substances.

Inspect the motorhome:

- Perform a full interior inspection for water leaks every two weeks while the motorhome is in storage. Open all cabinet doors looking for signs of dampness or leaks. Inspect the ceiling areas around roof vents or other roof openings.
- The roof and sidewall seams should be inspected and cleaned at least twice a year. Inspect for exterior sealant gaps of all roof seams, vents, skylights, roof air conditioners and windows. If necessary, use the proper sealants and recommended application procedures.

Fuel:

A full tank of fuel will help moisture from condensing at the top of the tank. Diesel fuel is an organic material which will develop a microbe growth (black slime). Fuel stabilizers may be added to help prevent the microbe growth. Consult the Cummins manual or a Cummins distributor for further detailed information on fuel stabilizers and additives.

Brakes:

Brakes also suffer from non-use during periods of storage. The bare metal machined surfaces of brake drums or rotors have only a light coating of dust from the brake lining friction material. The brake dust is the only thing protecting the bare metal surfaces from rusting. Only regular brake applications dry the moisture preventing rust on brake drum or rotor surfaces. During periods of non-use, oxygen and moisture oxidize the machined surfaces. Only occasional use keeps these surfaces from oxidizing. Rusty brake drum or rotor surfaces permeate the brake linings upon the first few applications, reducing the friction action of the linings.

Engine:

Internal combustion engines need to be "exercised" on a regular basis. This will ensure that an adequate supply of lubricating oil coats the cylinder walls and piston rings. Valve and valve seat surfaces also suffer from non-use. Some valves will remain open depending at which part of the combustion cycle the engine has stopped. The heat and cold of the day allows moisture to accumulate through the exhaust system.

Electric Motors:

Electric motors in the motorhome should be operated occasionally to help lubricate and keep surfaces rotating freely. These items include the roof air conditioners, dash fans, dash blower motor, furnace or Aqua Hot motors, heat exchangers and powered roof vents.

CHECKLIST-
Winter Storage

- **Plumbing Lines** - Drain and protect by filling with approved RV antifreeze.
- **Fresh Water Tank -** Drain.
- **Body -** Clean and wax. Oil locks and hinges. Repair roof seams as needed.
- **Countertop and Cabinets -** Wash with mild soap and water.
- **Curtains -** Remove and clean according to care specifications.
- **Windows -** To protect the interior fabric from fading, cover windows by pulling blinds, closing shades or using a separate cover such as a sheet.
- **Holding Tank -** Drain and rinse. Close valves.

Add a small amount of antifreeze to keep valves and gaskets lubricated.

- **Drain Traps -** Pour RV antifreeze down all drains.
- **Refrigerator -** Clean and leave both doors propped open. Cover the exterior panels and roof vents.

- **Batteries -** Add distilled water and recharge if needed. Disconnect the cables. Remove the batteries and store them in a cool dry place. Check and recharge as needed. Never park the coach where the battery door cannot be opened.
- **Air Conditioner -** Remove the air filters. Clean or replace.
- **Roof -** Keep clear of snow accumulation or damage may occur.
- **Interior/Exterior -** Storing under cover or indoors helps extend interior and exterior life.
- **Fuel Tank -** Diesel fuel tank should be full of fuel.

STORAGE
- Removal

If the motorhome was properly and carefully prepared for storage, removing it from storage will not be difficult. The following checklist pertains to items or areas which should be checked before operating or moving the motorhome. If the motorhome was not properly winterized, extensive freeze damage or other serious deterioration may have occurred. Consult a dealer or an authorized service center for advice.

- Thoroughly inspect the outside of motorhome. Look for animal nests in the wheel wells or in other out of the way places.
- Remove all appliance flue vent covers, ceiling vent covers and air conditioning covers. Be sure the refrigerator openings are free of debris, insect nests, webs, etc.
- Open all doors and compartments. Check for animal or insect intrusion, water damage or other types of damage which may have occurred.
- Check the state of charge of the batteries. If necessary fill the cells with distilled water only and charge as necessary. Inspect the cable ends and terminals. They should be clean and free of corrosion.
- Check all the chassis fluid levels: engine oil, engine coolant, hydraulic fluid reservoir, transmission oil and rear axle oil.
- Start the engine, allowing it to reach operating temperature. Ensure the engine instruments are indicating proper readings.
- While the engine is running, check the operation of headlights, taillights, turn signals, back-up lights, license plate light and emergency flasher. Operate the dash air conditioner. If the air conditioner does not work, or the compressor makes unusual noises, have the system checked by a qualified air conditioner technician.
- Shut the engine down. Adjust or add fluids as necessary. Inspect the engine for fluid leaks. Look under the motorhome for any other type of fluid leaks.

- Drain, sanitize and flush the fresh water system as outlined in the **Water Section.** Inspect the sewer drain hose and connections for leaks. Replace if necessary.
- Operate all faucets and fixtures in the fresh water system. Run a sufficient amount of fresh water through all the water lines and faucets to thoroughly purge any potable antifreeze from the fresh water system.

NOTE: Discard at least the first two trays of ice from the icemaker to ensure the ice does not contain traces of antifreeze or other contaminates.

- Open cabinet doors and drawers inspecting for water leaks at joints or fittings. Repair as necessary.
- Operate all 12 Volt lights and accessories. If something does not work there may be a bad 12 Volt circuit breaker or blown fuse.
- Install new batteries in battery operated safety detectors or devices. Test the carbon monoxide, LP-Gas and smoke detectors for proper operation.
- Check that the monitor panel is functioning properly.
- Inspect the 120 Volt electrical system which includes the power cord, inverter/converter all outlets and exposed wiring.
- Start and run the generator.

NOTE: Prepare the generator for operation following the instructions in the Generator Manual.

- Ensure the batteries are being charged. Operate the 120 Volt appliances and air conditioners. If an electrical item or appliance is not functioning properly, contact the dealer or an authorized service center to have it evaluated.
- Have a qualified technician inspect the LP-Gas system and perform an LP Gas leak test. The leak test should also include an LP-Gas regulator adjustment (if needed). The test can also verify if the regulator is faulty and should be replaced. Have the LP-Gas tank inspected.
- Operate each LP-Gas appliance. Observe all burner/pilot flames for proper color and size.
- Inspect and clean the interior.
- Check the sealant around all roof and body seams and windows. Reseal if necessary.
- Lubricate all the exterior locks, hinges and latches with a graphite lubricant.
- Check the windshield wiper blade condition. Check the wiper/washer operation.

- Wash and wax the exterior. Inspect the body for scratches or other damage; touch up or repair as necessary. Flush the underside thoroughly.
- Run through the operational checks for steering, brakes, engine and transmission. Operate the motorhome slowly during these checks to allow sufficient circulation of fluids and resetting of the components.
- If desired, have the dealer or repair center double check any preparation and correct any defects or make any necessary adjustments.

NOTES

4

INTRODUCTION

This section covers operation and care of various appliances found in the motorhome. The motorhome is equipped with a refrigerator, cooktop range, microwave, furnace, water heater, roof air conditioner and several optional appliances. Many of these appliances operate on AC or DC current, LP-Gas or a combination of all three.

Detailed information with CAUTION or WARNING instructions for the various appliances, other than what is found in this section, can be found in the manufacturer's manual.

WARNING: Before entering any type of refueling station make sure all LP-Gas operated appliances are off. Most LP-Gas appliances used in recreational vehicles are vented to the outside. When parked close to a gasoline pump it is possible for fuel vapors to enter this type of appliance and ignite, resulting in an explosion or fire. Carbon monoxide gas may cause nausea, fainting or death. Operating an LP-Gas appliance with inadequate ventilation or partial blockage of the flue can result in carbon monoxide poisoning. Do not store flammable liquids such as lighter fluid, gasoline or propane in the outside refrigerator compartment.

REFRIGERATOR

The refrigerator in the motorhome operates on a different principle than a standard household refrigerator. Knowing these differences should answer questions or solve problems that may arise. A standard household refrigerator uses a different type of refrigerant. In a household refrigerator the compressor pumps refrigerant vapor into a condenser where the heat from the refrigerant dissipates and the vapor changes to a liquid. The liquid refrigerant is pumped through a metered orifice or capillary tube at the evaporator. At this time the refrigerant changes from liquid to a vapor. This change cools the evaporator. Air is then blown across the evaporator and into the interior of the refrigerator. This system is efficient as long as 120 Volts AC is available; however, this does not allow the freedom a recreational vehicle is designed to give.

The motorhome refrigerator uses a combination of fluids and gas for refrigeration: ammonia, water, sodium chromate and hydrogen gas. This combination is put into a pressurized cooling unit at approximately 350 psi. It is heated to a gaseous state which then rises to the top of the cooling unit into a condenser where it forms droplets as it cools. As the vapor condenses it "extracts or absorbs" heat out from the inside of the refrigerator. Using gravity the droplets return through the absorber coils to the absorber vessel to start the process again. To insure longevity and proper operation of the cooling unit follow the specific instructions for use and care. With the proper care and maintenance the refrigerator should provide years of trouble-free service.

Operation Specifics

The refrigerator operates from either LP-Gas or 120 Volts AC electric. Controls are electronic which require the DC Voltage to be no higher than 15.4 Volts DC or lower than 10.5 Volts DC. The AC voltage limits are 132 Volts AC (Volts Alternating Current) maximum and 108 Volts AC minimum. The refrigerator (from front view) needs to be leveled within 3º side to side and 6º front to back. Using a torpedo or bulls eye (fence post) level, place the level onto the freezer plate. The level should be within the circle by a half of a bubble. Generally, this is within comfortable living conditions. The heat source for the cooling unit is supplied by an electric heating element or an LP-Gas flame. The heat source, which is calibrated in BTU's (British Thermal Units), is concentrated to a specific area of the cooling unit. Refrigerator operation in an "off level" condition separates the sodium chromate and crystallize from the heat source, which blocks the recirculation action of the cooling unit and causes accumulative, irreparable damage. The LP side of the refrigerator and the LP-Gas pressure need to be serviced yearly, depending on use. Over time the BTU rating can change, which will affect the refrigerator's performance. Ambient air temperature and humidity can also affect its performance and function. The BTU rating lowers when operating LP-Gas at an altitude higher than 5,500 feet. This affects the refrigerator's performance. If possible, switch mode operation to 120 Volts AC electric while at a higher altitude.

WARNING: Do not use the refrigerator if there is an ammonia smell inside or outside of the refrigerator, or if a yellowish substance appears inside the box or in the outside access compartment. This can be an indication of a refrigerant leak. Contact an authorized repair facility.

Tips

- If possible, cool items first before putting them into the refrigerator.
- Keep the doors shut. Decide what is wanted before opening the door.
- Allow the refrigerator 24 hours of operation before actual use to help it get a "head start" with the refrigeration process.
- A box of open baking soda will help absorb food odors. Wipe up any spilled soda.

The refrigerator can be operated by an optional inverter. This feature keeps the refrigerator contents cool while traveling by supplying the 120 Volt AC.

To enable this feature:

1. Turn the inverter **ON.**
2. Turn the refrigerator **ON**. Select AC power operation.

NOTE: Use this feature will result in dead house batteries. Hook to shore power or turn the inverter off and switch the refrigerator to LP-Gas operation.

Refrigerator Controls

The refrigerator controls are DC (direct current) operated through an electronic circuit board. The refrigerator, which operates from heat as described above, gets its heat source two different ways: an electric heating element or a flame from

LP-Gas. Mode operation and temperature selection is made by controls on the face of the refrigerator. In order for the refrigerator to operate the house batteries must be charged, the LP-Gas valve on, the water valve on (ice maker option only) and the refrigerator AC cord plugged in (located in outside refrigerator access door). If the controls do not light up, check the house batteries' charge status or see if the 12 Volt wires are plugged into the refrigerator's circuit board (located outside in the refrigerator access door).

Inverter Mode Operation

While traveling, the refrigerator may be operated using the 120 Volt AC electric mode to keep the refrigerator contents cool. The electrical combination of the engine's alternator and the inverter will supply the power necessary to operate the refrigerator on 120 Volts AC. Operating the refrigerator on LP-Gas when refueling can be dangerous. Use the AC electric mode when in travel to avoid this situation. Disable this feature when the engine is turned off. House battery power will be quickly consumed when using the inverter to operate the refrigerator on AC electric. Hook to shore power, start the generator or switch refrigerator operation to LP-Gas. Turn the inverter off when not in use.

To enable this feature:
1. Turn the inverter ON.
2. Turn the refrigerator ON. Select AC power operation.

To disable this feature:
1. Turn the inverter OFF.
2. Hook to shore power, start the generator or switch operation to LP-Gas.

NOTE: Use this feature only when the engine is running. Failure to disable this feature with the engine off will result in dead house batteries. Hook up to shore power, start the generator or switch refrigerator operation to LP-Gas.

Alarm

The refrigerator uses an audible alarm that will sound for the following reasons:
1. DC or AC voltage is higher or lower than allowed specifications.
2. Refrigerator is set to auto mode and the 120 Volts AC is discontinued.
3. Liquid Petroleum Gas mode fails to light initially or fails to light after a period of operation.
4. Door has been left open longer than two minutes.
5. The circuit board detects a failure resulting in a code being displayed.

NOTE: If the alarm sounds, note the code in the LED display and turn the refrigerator off to silence the alarm. Refer to the manufacturer's manual for the list of codes and their meanings.

NOTE: Keep the interior box temperature at or below 54º F to reduce the possibility of food spoilage. The refrigerator works harder to keep a low box temperature, especially in hot, humid climates. Low box temperature may also add quicker frost build-up.

WARNING: Make sure all flames are extinguished and the LP-Gas valve is off before refueling. LP-Gas and gasoline are highly flammable which can ignite, resulting in an explosion, fire or death. Many states have passed laws regarding having the LP-Gas valve open while traveling. Know the laws for the particular state in which you are traveling.

Doors

The refrigerator doors are positive lock style doors that close with a "click" to prevent accidental door opening while traveling. When storing the motorhome the refrigerator doors have a storage position that locks the doors partially open. This will help reduce odor from mold and bacteria build-up. A completely closed refrigerator in storage is a perfect habitat for molds and bacteria to grow. To use the storage feature, open doors approximately a half inch and slide the latch into the cut-out of the strike plate.

Control Panel - 800 Series

The refrigerator control panel is between the freezer compartment and the fresh food compartment. A 12 Volt DC power supply is necessary to maintain the operating control functions of the refrigerator.

- **ON/OFF Button -** Starts and shuts down the refrigerator.
  - – If the refrigerator is shut down, push the ON/OFF button to start the refrigerator in auto mode.
  - – If the refrigerator is operating, push and hold the ON/OFF button for two seconds to shut it down.
- **TEMP SET Button** - Controls temperature adjustments for freezer and fresh food compartment. The temperature adjustment selected does not change if the operation mode of the refrigerator changes.
  - – Push the **TEMP SET** button and the temperature setting "1-9" appears in the center display.
  - – Push and hold the **TEMP SET** button and the temperature setting changes.
  - – Number "9" is the coldest setting.
- **MODE Button** - Controls the operation mode of the refrigerator.
  - – Push and hold the **MODE** button and each of the four operating modes of the refrigerator flash one at a time in the center display.
  - – There is one automatic mode of operation and three manual modes of operation.
  - – Release the **MODE** button when the mode of operation selected appears in the center display.

Manual Mode Operation - 800 Series

When one of the two manual modes is selected:

1. **AC** = The refrigerator is operating on AC electric.
2. **LP** = The refrigerator is operating on LP-Gas.

If the LP-Gas does not ignite within 30 seconds the controls either change to a different energy source or the gas safety valve closes and **F** is displayed. If the gas does not ignite after several attempts consult your dealer or authorized Norcold service center.

Automatic Mode Operation - 800 Series

When the **AUTO** mode is selected the refrigerator automatically selects the most efficient energy source that is available for operation. If a more efficient energy source becomes available the refrigerator controls change from the current energy source to the more efficient energy source. The controls select the energy source in this sequence.

1. When 120 Volts AC is available to the refrigerator "**AU AC**" flashes in the center display. This means that the refrigerator is operating on AC electric. After ten seconds, the "**AU AC**" goes off and only a power indicator remains.
2. If 120 Volts AC is not available to the refrigerator, "**AU LP**" flashes in the center display. This means that the refrigerator is operating on LP-Gas.
3. After the refrigerator is operating, press the **TEMP SET** button and adjust to the desired temperature.

Control Panel - 1200 Series (Optional)

- **ON/OFF Button -** Press this button to turn the refrigerator ON. Press and hold this button until the lights are no longer lit to turn the refrigerator OFF.
- **LED Display -** This screen is used for fault code display.
- **MODE Button -** Press and hold this button to cycle the refrigerator through the different modes available: AUTO, AC and LP modes. Release the button when the desired mode is displayed.
- **TEMP SET Button -** Press and hold the button to select the desired temperature setting. Five settings are available, from COLD to COLDEST.

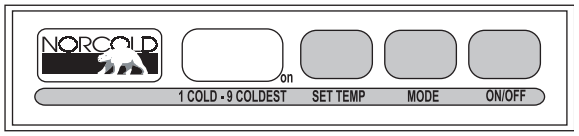

The Refrigerator Control Panel requires 12 Volt DC to operate.

Manual Mode Operation - 1200 Series

This mode will lock the refrigerator into either LP-Gas or electric AC operation. Press and hold the **MODE** button until LP or AC is displayed. Release when the desired function is lit. The Alarm will sound and a code will be displayed if the function selected is interrupted or a failure occurs. Note the code and turn the refrigerator off to silence the alarm. Refer to the manufacturer's manual for a list of codes and their meanings.

Automatic Mode Operation -1200 Series

This feature will automatically select 120 Volts AC over LP-Gas operation. If 120 Volts AC is available, it will use this source for operation until AC service has been discontinued. When AC is discontinued, the alarm will sound and the refrigerator will automatically switch to LP-Gas operation. If the refrigerator fails to light the alarm will sound and a code will be displayed.

Press and hold the **MODE** button until **AUTO** is displayed, release the button. Press and hold the **TEMP SET** button until desired temperature is displayed, release button. In **AUTO** mode, AC or LP will remain lit for 10 seconds upon initial start or when mode has changed.

Ice Maker Operation (Optional)

The ice maker works from 120 Volts AC only. The ice maker will start to function only after the freezer temperature is low enough. City water or the water pump must be on and the valve (located under the refrigerator) for the water supply line to the ice maker must be on. Pulling the metal arm (bail) down will turn the ice maker on. Pushing the arm up will turn the ice maker off.

If the ice maker is in operation while the motorhome is in motion water may spill out of the ice tray. **Raise the ice maker arm to stop ice production while the motorhome is in transit.**

NOTE: Do not use the first one or two trays of ice if the refrigerator has been in storage. Ice cubes may have contaminates. Do not operate the ice maker without water pressure supplied to the refrigerator. This can cause damage to the ice maker assembly.

High Humidity Operation

The refrigerator is equipped with a heating element located in the flapper on the left door (four door model) or in the door (two door model). The heating element is activated when the refrigerator is turned on to any mode to help prevent moisture build-up in high humidity conditions.

Cooling Unit Fans (Four Door Models)

The cooling unit is equipped with a pair of cooling fans to help pass air across the cooling unit. These fans start automatically and will be audible when in operation.

Defrosting the Refrigerator

Turn the refrigerator off and remove all items. Leave the drip tray under the cooling fins. Do not use heating guns, hair dryer or sharp objects to remove frost build-up as these can damage the interior. Leave all doors open. Defrost time can be shortened using trays of warm water. Wipe off excess water using paper towels or cotton cloth.

CAUTION: Do not use a hot air blower. Permanent damage could result from warping metal or plastic parts. Do not use a knife, ice pick or any other sharp tool to remove ice from the freezer as they can create a leak in the ammonia system.

Cleaning the Refrigerator

Wipe using only cotton or paper towels. Products such as *Formula 409*, *Dawn* and *Fantastik* are acceptable cleaners. Do not use scouring pads or abrasive cleanser as these can damage the interior finish.

NOTE: Do not use abrasive cleaners, chemicals or scouring pads. They can damage the interior of the refrigerator. "Dawn," "Fantastik" and "Formula 409" are the brand names of three products recommended for use. Wash the interior with a mild cleaner or a solution of liquid dish detergent and warm water. Rinse with a solution of baking soda and clean water. Dry with a clean cloth.

MICROWAVE OVEN

The microwave oven is operated from 120 Volt AC supplied by shore power, the generator or the inverter. Microwaves heat food using sound waves generated at a very high frequency (2,450 MHZ) to agitate the water molecules inside the item being heated. The higher the water content is to solids, the faster the response or the shorter the cooking time. Inside the microwave is a turntable that rotates when the microwave is operating. This will help heat the food evenly. The turntable can be turned off if a baking dish or other large item is used. The microwave is designed to sit over a range or cooktop. When cooking from the cooktop use the microwave's two speed ventilation fan. The fan draws air in from the bottom of the microwave through a pair of grease filters then discharges the filtered air out through a charcoal filter at the top. The ventilation fan is controlled by a thermostat and activates automatically from heat produced by the cooktop.

The microwave offers many different features. Some include varied cooking times with different power settings: automatic sensor cooking, a kitchen timer, metric to American conversion chart (which includes temperature and weight), on screen programming help, childproof lockout and auto defrost cycles. The screen can display one of three different languages.

After placing the food in a suitable container, open the oven door and put it on the glass tray. The glass tray and roller guide must always be in place during cooking. Ensure the door is firmly closed before use.

- The oven light is only on when the microwave oven is operating.
- The oven door can be opened at any time during operation by touching the door release button on the control panel. The oven will automatically shut off.
- Each time a pad is touched a "beep" will sound to acknowledge the touch.
- The oven automatically cooks on full power unless set to a lower power level.
- The display will show ":0" when the oven is plugged in.

- The time clock returns to the present time when the cooking time ends. When the STOP/CLEAR pad is touched during the oven operation the oven stops cooking and all information is retained. To erase all information (except the present time) touch the STOP/CLEAR pad once more. If the oven door is opened during the oven operation all information is retained.
- If the START pad is touched and the oven does not operate check the area between the door and door seal for obstructions and make sure the door is closed securely. The oven will not start cooking until the door is completely closed or the program has been reset.

Microwave Tips:

- Turn the oven off before cleaning.
- Keep the inside of the oven clean. When food spatters or spilled liquids adhere to oven walls, wipe with a damp cloth. Mild detergent may be used if the oven gets dirty. The use of a harsh detergent or abrasive cleaner is not recommended.
- Clean the outside oven surface with soap and water. Wipe away any residue using a damp cloth. Dry with a soft cloth. To prevent damage to the operating parts inside the oven, do not allow water to seep into the ventilation openings.
- If the control panel becomes wet, clean with a soft, dry cloth. Do not use harsh detergents or abrasives on the control panel.
- If steam accumulates inside or around the outside of the oven door, wipe it away with a soft cloth. This may occur when the microwave oven is operated under high humidity conditions and in no way indicates a malfunction of the unit.
- It is occasionally necessary to remove the glass tray for cleaning. Wash the tray in warm sudsy water or in a dishwasher.
- The roller guide and oven cavity floor should be cleaned regularly to avoid excessive noise. Simply wipe the bottom surface of the oven with mild detergent water or window cleaner and then dry. The roller guide may be washed in mild sudsy water.

NOTE: The microwave is for food preparation only. Do not use the microwave to dry clothes, newspapers, shoes or other items.

Microwave Facts:

One of the most useful documents for the microwave is the operations manual, located in the owner's information file box. Read it carefully and keep it for reference. Another useful item is a microwave cookbook. Many will contain information about cooking principles, techniques, hints and recipes. Ensure food is in the microwave during operation to absorb the microwave energy. The magnetron, cycling on and off, may be heard for power levels less than 100%.

Condensation is a normal occurrence in microwave cooking. The moisture within foods and the room humidity will influence how much moisture condenses in the microwave. Covered foods will not usually produce as much condensation as foods that are not covered.

About Cooking:

- Food should be arranged with the thickest areas towards the outside of the dish.
- Monitor cooking times. Use the shortest amount of time required for cooking and add time as needed. For popcorn, follow product instructions and carefully monitor for the duration of popping time.
- Cover the food while cooking to prevent splatter and reduce condensation.
- Stir the food from the outside of the dish to the center, once or twice, between cooking.
- Turn food over during cooking to speed cooking times. Large food items should be turned at least once during cooking time.
- Use standing times to prevent overcooking. Covered food will continue to cook after it is removed from the microwave oven.
- Check for indications that the food is thoroughly cooked.
  - Food is steaming throughout, not just around the edges.
  - Poultry thigh joints come apart and move easily.
  - Meat or poultry is not pink in color.
  - Fish is opaque and flakes easily with a fork.
  - Center bottom of the dish is very hot to touch.

FOOD	DO	DO NOT
Eggs, Sausages, Fruits & Vegetables	• Puncture egg yolks before cooking to prevent bursting. • Pierce skins of potatoes, apples, squash, hot dogs & sausages to allow steam to escape.	• Cook eggs in shells. • Reheat whole eggs.
Popcorn	• Use specially bagged popcorn for use in the microwave. • Remove popcorn when popping slows to 1 or 2 seconds in between pops. Use the POPCORN setting.	• Pop popcorn in regular brown bags or glass bowls. • Exceed maximum time on popcorn package.
Baby Food	• Transfer baby food to small dish & heat carefully. Stir often. Check temperature before serving.	• Heat disposable bottles • Heat rubber nipple. • Heat baby food in original jar.
General	• Cut filled baked goods after heating to release steam. • Stir liquids before and after heating to avoid boiling over. • Use deep bowls for cooking liquids or cereals to avoid boiling out of the container.	• Heat or cook in closed jars or air-tight containers. • Use for Canning. Cooking and heating may not destroy bacteria. • Deep fat fry. • Dry wood, gourds, herbs or wet paper.

A meat thermometer is the best way to ensure that the food is cooked. The meat thermometer should be inserted into the thickest part of the meat, away from bone or fat. Most food should range between 160º F to 180º F. Never leave the thermometer in during cooking as it can shatter.

Microwave Cooking Safety:

- Always use pot holder to prevent burns when handling utensils that are in contact with hot food. Enough heat can transfer from food through utensils to cause skin burns.
- Stay near microwave when cooking and check frequently during cooking to prevent overcooking.
- Never use the cavity as a storage area for cookbooks or other items.
- Avoid steam burns by directing steam away from face and hands.

Operation

The microwave oven operates from 120 Volt AC. This power is supplied by shore power, the generator or the optional inverter. The microwave oven has an output power of 950 watts with an oven capacity of 1.4 cubic feet. There are several features and options which makes for an ease of understanding and operating.

WARNING: If a fire flares up when using the cooktop turn off the ventilation fan. The fan may spread the flame. If the ventilation fan has started automatically from a heated cooktop it can not be manually turned off. Turn off the microwave AC circuit breaker to prevent the flame from getting up into the microwave and spreading the fire.

NOTE: When cooking with a microwave avoid using the inverter as the AC power source due to the high rate of battery consumption.

NOTE: The microwave is for food preparation only. Do not use the microwave to dry clothes, newspapers, shoes or other items.

Features Include:

Interactive Cooking System
Turntable ON/OFF Setting
Custom Help
Compucook
Breakfast
Snacks
Reheat
Work Light
Nite Light

Custom Help:

This feature provides five separate options with specific instructions in the display area.

The Child Lock, Audible Signal Elimination, Auto Start, Language and Weight Selection are the features within the Custom Help.

Child Lock:

The microwave comes with a safety Child Lock feature. This feature prevents the oven from operating accidentally.

To use this feature:

- Press the **CUSTOM HELP** pad.
- Press the **1** pad.
- Press the **START/TOUCH ON**.
- **LOCK** will appear in the visual display area.

The oven is now locked. If any button is pressed the word **LOCK** appears on the screen. The fan and hood light is still operational with the Child Lock feature on.

To return the oven to normal operation:

- Press the **CUSTOM HELP** pad.
- Press the **STOP/CLEAR** pad. The oven will resume normal operation.

Audible Signal Elimination:

The microwave has the ability to eliminate the audible signal or beeps.

To use this feature:

- Press the **CUSTOM HELP** pad.
- Press the **2** pad.
- Press the **STOP/CLEAR**.

To return the oven to normal operation:

- Press the **CUSTOM HELP** pad.
- Press the **START/TOUCH ON** pad. The oven will resume normal operation.

Auto Start:

The oven can be set up to begin cooking automatically at a designated time.

To use this feature:

- Press the **CUSTOM HELP** pad.
- Press the **3** pad.
- Enter the designated start time.
- Press the **TIMER/CLOCK** pad.
- Enter the cooking time and power level.
- Press the **START/TOUCH ON** pad.

NOTE: Auto Start can be used for manual cooking, Breakfast, CompuCook, Popcorn or Snacks and Reheat only if the clock is set.

NOTE: Ensure clock is set before using the procedure. Ensure the food can be left in the oven until cook time begins.

Language and Weight Selection:

The oven has three languages and perspective weights which can be selected. To use this feature:

- Press the **CUSTOM HELP** pad.
- Press the **4** pad until the desired language and weight is selected.
- Press the **START/TOUCH ON** pad.

Setting The Clock:

- Press the **STOP/CLEAR** pad.
- Press the **KITCHEN TIMER/CLOCK** pad.
- Press the **2** pad .
- Enter correct time in sequence using the number pads.
- Press the **KITCHEN TIMER/CLOCK** pad to begin time.

NOTE: The clock is a 12 hour clock only.

Press the STOP/CLEAR pad to:

- Erase, if you make a mistake during programming.
- Cancel the kitchen timer.
- Stop the oven temporarily during cooking.
  (Press the **START/MINUTE PLUS** pad to resume.)
- Return the time of day to the display.
- Cancel a program during cooking (touch the pad twice).

Kitchen Timer:

- Press the **KITCHEN TIMER/CLOCK** pad.
- Press the **1** pad .
- Enter correct time in sequence using the number pads.
- Press the **START/TOUCH ON** pad.

Microwave - Timed Cooking:

The maximum amount of cooking time is 99 minutes and 99 seconds. Be sure to enter minutes and seconds. If seconds are not desired, enter 00.

Press the **START/TOUCH ON**. The microwave operates at 100% power unless the POWER LEVEL is selected.

One Minute Cook Times:

Press the **MINUTE PLUS** pad if one minute at full power is desired or to add one minute intervals to cooking time.

The **MINUTE PLUS** pad must be pressed within one minute of closing the door, or during selected cooking time. For safety, the **MINUTE PLUS** feature will lockout if there is no microwave activity within one minute of closing the door. Use the **START/TOUCH-ON** pad to reset the one minute safety period.

Microwave Cooking:

To use 100% power, enter cook time by pressing the number pads. Press the **START/TOUCH ON** pad to begin cook time. To use settings lower than 100% power, use the number pads to enter desired cooking time. Press the **POWER LEVEL** pad. Use the number pad to select desired power level. Press the **START/TOUCH ON** pad to begin cook time.

Turntable On/Off:

When cooking, the turntable should be left on. If a dish is used that will not rotate, turn the turntable OFF to prevent damage to the microwave.

To use the feature:

- Press **TURNTABLE ON/OFF** pad to stop or start the turntable.
- Enter the cook time; desired minutes and seconds.
- Enter power level desired.
- Press the **START/TOUCH-ON** pad.

Popcorn:

This feature is used when popping a standard 3.5 oz. bag of popcorn.

To use the feature:

- Press the **POPCORN** pad once.
- Press the **START/TOUCH ON** pad.

CompuCook:

CompuCook automatically computes the correct cooking time and power level for food item.

This feature can be used with the following procedures:

- Press the **CompuCook** pad. This will ask for the food number.
- Select the desired number for the food item.
  - 1 for Baked Potatoes
  - 2 for Fresh Vegetables
  - 3 for Frozen Vegetables
  - 4 for Rice
  - 5 for Ground meat
- Press the number pad for the amount or weight to be cooked.
- Press the **START/TOUCH ON** pad.

Multiple Sequence Cooking:

If sequential cooking times with varied power levels are desired, press the **POWER LEVEL** pad and select the desired power level. Use the number pad to enter cook time for the first interval. Press the **POWER LEVEL** pad again, select the desired power level and enter the cook time for the next time period. Press the **START/TOUCH ON** pad to begin sequential cooking. The microwave can hold up to four sequential cook time periods. If full power is desired in any of the time periods, skip the power level step and 100% power is automatically selected.

Defrosting:

Defrosting can be done on manual time selection or using the microwave's CompuDefrost.

Manual Defrost:

Press the **POWER LEVEL** pad. Select number 3 for defrost power. Enter the desired defrost time. Be sure to stir or break food apart at regular intervals.

CompuDefrost:

The microwave has automated defrost programs for different foods and weights. Press the **CompuDefrost** pad to enter this mode. Press **CompuDefrost** again to select between ground meat, steak or chicken. Use number pads to enter weight of food being defrosted. Press **START/TOUCH ON** to begin defrost cycle.

Breakfast:

Breakfast automatically computes the correct cooking time and power level for food item.

This feature can be used with the following procedures:

- Press the **Breakfast** pad. This will ask for the food number.
- Select the desired number for the food item.
  - 1 for Coffee/Tea
  - 2 for Roll/Muffin Fresh
  - 3 for Roll/Muffin Frozen
  - 4 for Hot Cereal
  - 5 for Scrambled Eggs
- Press the number pad for the amount or weight to be cooked.
- Press the **START/TOUCH ON** pad.

Snacks and Reheat:

The Snacks and Reheat automatically computes the correct cooking time and power level for food item.

This feature can be used with the following procedures:

- Press the **Breakfast** pad. This will ask for the food number.
- Select the desired number for the food item.
  - 1 for Dinner Plate
  - 2 for Pasta/Casserole
  - 3 for Frozen Entree
  - 4 for Frozen Snack - Microwave Pizza
  - 5 for Pizza Slice
- Press the number pad for the amount or weight to be cooked.
- Press the **START/TOUCH ON** pad.

MICROWAVE/ CONVECTION OVEN (Optional)

The microwave/convection oven operates from 120 Volt AC supplied by shore power. The microwave oven has an power output of 850 watts and a convection heater output of 1,400 watts. The oven capacity is 1.1 cubit feet.

The microwave/convection oven has the ability to cook food with heat like an electric oven, or preheat the oven with heat and cook with microwaves. Other features include the ability to cook with microwaves and convection at the same time, sensor cooking and a built-in broiler. A brief overview of these features may aide in the operation of the microwave/convection oven.

NOTE: The microwave is for food preparation only. Do not use the microwave to dry clothes, newspaper, shoes or other items.

Safety Lock:

The microwave comes with a safety lock feature. This feature prevents the oven from operating accidentally. To use this feature:

- Press the **CUSTOM HELP** pad.
- Press the **1** pad.
- Press the **START/TOUCH-ON** pad.

The oven is now locked. If any button is pressed the word **LOCK** appears on the screen. The fan and hood light is still operational with the Safety Lock feature on. To return the oven to normal operation:

- Press the **CUSTOM HELP** pad.
- Press the **1** pad.
- Press the **START/TOUCH-ON** pad. The oven will resume normal operation.

Setting The Clock:

- Press the **STOP/CLEAR** pad.
- Press the **CLOCK** pad.
- Enter correct time in sequence using the number pads.
- Press the **CLOCK** pad to begin time.

NOTE: The clock is a 12 hour clock only.

Kitchen Timer:

- Press the **KITCHEN TIMER** pad.
- Using the number pads enter minutes and seconds, or 00 if no seconds.
- Press the **START/TOUCH-ON** pad to begin timer. Timer end will be signaled by one long beep.

Press the STOP/CLEAR pad to:

- Erase, if you make a mistake during programming.
- Cancel the kitchen timer.
- Stop the oven temporarily during cooking.
  (Press the **START/TOUCH-ON** pad to resume).
- Return the time of day to the display.
- Cancel a program during cooking (touch the pad twice).

Turntable On/Off:

- Press **TURNTABLE ON/OFF** pad to stop or start the turntable.
- Enter the cook time desired minutes and seconds.
- Enter power level desired.
- Press the **START/TOUCH-ON** pad.

Hood Light:

To turn the hood light on or off touch the **LIGHT** button.

Ventilation Fan:

Press the **FAN HI/LO** button once for high, twice for low and three times for off.

Microwave - Timed Cooking:

The maximum amount of cooking time is 99 minutes and 99 seconds. Be sure to enter minutes and seconds. If seconds are not desired enter 00.

WARNING: If a fire flares up when using the cooktop turn off the ventilation fan. The fan may spread the flame. If the ventilation fan has started automatically from a heated cooktop it can not be manually turned off. Turn off the microwave AC circuit breaker to prevent the flame from getting up into the microwave and spreading the fire.

NOTE: When cooking in convection mode try to avoid using the inverter as the AC power source due to the high rate of battery consumption.

Microwave Cooking

Press and hold the **START/TOUCH-ON**. The microwave pad operates at 100% power until the pad is released. This mode can be used for up to three minutes and up to three consecutive cycles.

One Minute Cook Times:

Press the **MINUTE PLUS** pad if one minute at full power is desired or to add one minute intervals to cooking time. The **MINUTE PLUS** pad must be pressed within one minute of closing the door, or during selected cooking time. For safety the **MINUTE PLUS** feature will lockout if there is no microwave activity within one minute of closing the door. Use the **START/TOUCH-ON** pad to reset the one minute safety period.

Microwave Cooking:

To use 100% power, enter cook time by pressing the number pads. Press the **START/TOUCH-ON** pad to begin cook time. To use settings lower than 100% power, use the number pads to enter desired cooking time. Press the **POWER LEVEL** pad. Use the number pad to select desired power level. Press the **START/TOUCH-ON** pad to begin cook time.

Multiple Sequence Cooking:

If sequential cooking times with varied power levels are desired, press the **POWER LEVEL** pad and select desired power level. Use the number pad to enter cook time for the first interval. Press **POWER LEVEL** pad again, select desired power level, then enter cook time for the next time period. Press the START/TOUCH-ON pad to begin sequential cooking. The microwave can hold up to four sequential cook time periods. If full power is desired in any of the time periods, skip the power level step and 100% power is automatically selected.

Keep Warm:

Press the **KEEP WARM** pad during cooking time to automatically keep food warm for up to 30 minutes after cooking time has expired. To use this feature after cooking time has expired or after the food has been removed, place the food back into oven and press the **KEEP WARM** pad.

Defrosting:

Defrosting can be done on manual time selection or use the microwave's CompuDefrost.

Manual Defrost:

Press the **POWER LEVEL** pad. Select number 3 for defrost power. Enter desired defrost time. Be sure to stir or break food apart at regular intervals.

CompuDefrost:

The microwave has automated defrost programs for different foods and weights. Press the **CompuDefrost** pad to enter this mode. Press **CompuDefrost** again to select between ground meat, steak or chicken. Use number pads to enter weight of food being defrosted. Press **START/TOUCH-ON** to begin defrost cycle.

Sensor Cooking:

The microwave has electronic sensors that sense moisture or humidity given off by the food during the cooking process. Electronic sensors will be affected if room temperature exceeds 95° F. To adjust the sensor cooking mode to allow for more or less cooking time, press the **SENSOR COOK** pad. Press the **POWER LEVEL** pad once to increase cooking time or twice to decrease cook time.

To use the sensor cooking mode, press the **SENSOR COOK** pad. Select the number or food desired from the library listed adjacent to the **SENSOR COOK** pad. Press the **START/TOUCH-ON** pad to begin sensor cooking.

Convection Cooking

The interior of the microwave produces heat just as in a regular oven. The convection cooking mode has special options such as a broil mode, the ability to preheat oven by convection and use of microwaves to complete cooking or to preheat.

NOTE: When using the convection oven feature, leave the turntable in place and do not restrict the rotation. This can damage the microwave.

Cooking with Convection:

Press the **CONVEC** pad. Press the numbered pad with the desired cooking temperature. Press the numbered pads for desired cooking time. Press the **START/TOUCH-ON** pad to begin convection cooking.

Manual Broiling:

The Manual Broiling temperature is automatically preset to 450° F. Only the cooking time can be adjusted.

To use the broiler, press the **BROIL** pad. Enter amount of cooking time. Press the **START/TOUCH-ON** pad to begin preheating the oven. Four beeps will signal the end of the preheat cycle. Food can now be placed into the oven.

CompuBroil:

The CompuBroil cooking method has programs preset for common foods like hamburgers, steaks, chicken and fish. Temperature and time are preset depending on the food quantity. The amount of cooking time can be adjusted to fit particular needs. The **POWER LEVEL** pad will vary the preset cooking time. **Press once for more time and twice for less time.**

To use the **CompuBroil** feature: Press the **CompuBroil** pad and select the food number from the food library next to the CompuBroil pad. Enter the number of pieces being broiled. Press the **START/TOUCH-ON** pad to begin the preheat cycle. A series of four beeps signal the end of preheat cycle.

Automatic Mix Cooking:

This method combines both the convection oven and microwave at the same time. The microwave uses 30% power on **HIGH/MIX** and 10% power on **LO/MIX** while in this mode. The convection temperature can be changed from 100° F to 450° F. The default convection temperature is 325° F for both **HIGH/ MIX** and **LO/MIX**.

To use this feature: Select either **HIGH/MIX** or **LOW/MIX** and use the number pads to enter cooking time. Press the **START/TOUCH-ON** pad to begin the mixed cooking cycle.

CompuRoast or CompuBake:

These features can be used for food items ranging from pastries and cakes to roasts, chicken and pork. The temperature is preset for both functions. Only the cook times can be tailored for individual preference by entering into either the **CompuRoast** or the **CompuBake** mode. Press the **POWER LEVEL** pad once for more cooking time and twice for less cooking time.

To use either function: Press the desired pad, enter the food type from list next to the mode used and enter the food type being cooked by using the number pad.

To use **CompuBake**: Press the **START/TOUCH-ON** pad to begin the preheat cycle.

To use **CompuRoast**: Enter the weight of item using the number pads. Press the **START/TOUCH-ON** pad to begin the preheat cycle. Four beeps will signal the end of the preheat cycle and the oven is now ready.

Tips

- Check the type of cookware being used to see if it is microwave or oven safe depending on the type of cooking being done.
- Gold paint or glaze may contain a trace amount of gold which is electrically conductive and not compatible for microwave. Hand-painted china commonly contains traces of metal.

- To test utensil for microwave compatibility place it in the microwave with an 8 oz. plastic cup of water. Set the microwave at full power for one minute. Carefully feel the utensil. The entire utensil should be cool to the touch.
- Cover food with a paper towel or upside-down plate to help keep food spattering to a minimum. Place a paper towel on the turntable to keep clean-up at a minimum. Use paper towels with microwave use only.
- Clean all spills or spatters before they dry.
- Food odors may linger inside oven. To help eliminate odors, combine the juice and the peel from one lemon, several whole cloves and 8 oz. of water into a two cup bowl. Place in oven on high power, bring to a boil for several minutes. Let cool in the oven for several minutes.
- Some food wrappers may be foil lined. Check the wrapping carefully before cooking or heating. A small amount of foil is acceptable if it is not wrinkled or near the sides of the microwave.
- If the microwave screen is not lit, plug another electrical appliance into the same outlet the microwave was plugged in to verify AC power is present. If the test item works, contact an appliance repair facility to have the microwave checked.

Care & Cleaning

The exterior of the microwave is plastic and metal. The interior is metal. Do not use scouring pads, harsh or abrasive cleanser, chemical cleaners or petroleum based thinners as these can damage the finish. Use mild soap and water with a damp cloth or paper towel to remove most stains or spills. When cleaning the touch pad open the door to prevent accidental operation. Use mild soap and water with a soft cloth. Avoid using excess amounts of water on the touch pad. The turntable plate and oven racks are dishwasher safe.

Grease Filters:

Do not operate the oven without the grease filters in place. This can damage the microwave. Grease filters should be cleaned at least once a month. To remove the filters, use the pull tab to slide the filter to the end of the opening and tip down. Soak the filters in the sink or in a dishpan filled with hot water and detergent.

- Do not use ammonia or other alkali based products. They may darken the filter material.
- Agitate the filter. Use a scrub brush to remove caked on grease.
- Rinse the filter thoroughly and shake it dry. Place the filter back into the opening, tip it upward and slide it to the end of the opening. Lock it in place. Be careful not to kink or warp the filter upon installation.

COOKTOP RANGE/OVEN

The cooktop uses LP-Gas only as a fuel source. The burners use a piezo type igniter. The cooktop should be used for cooking purposes only and not as a heating source. When the burner valve is opened the fuel source flows through the valve into the mixture tube. The fuel passes by a hole or venturi in the mixture tube, which draws air in with the fuel for a proper fuel/air ratio. The flame should have a blue appearance with a lighter blue defined flame at the burner head. A yellow flame or yellow tips indicate a rich fuel mixture, which can leave a black color or carbon on the bottom of a pot or pan.

Operation

The cooktop will operate when the following conditions have been met:

1. The LP-Gas valve on the LP tank is open.
2. The house battery cut-off switch is ON.

To use the cooktop open the desired burner valve and rotate the igniter knob, clockwise, at the left hand side of the stove.

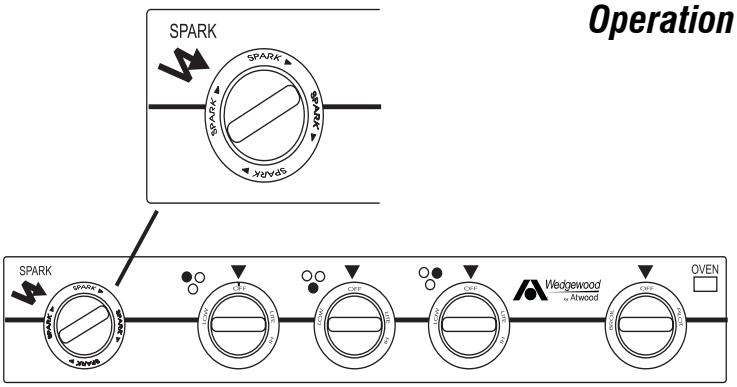

Before cooking on the range top the cover must be in full upright and folded position. Push the cover toward the outside wall to prevent it from falling onto the range top during cooking.

- Never close the cover while the burners are in use.
- Do not use the cover as a griddle.
- The oven may be used with the cover down.
- The bi-fold cover must always be closed when the motorhome is in transit.

WARNING: Do not the heat motorhome interior with the range or oven. Gas combustion consumes oxygen inside the motorhome.

Lighting Top Burners

- Turn the appropriate burner knob counter-clockwise to ON or **LITE**. Do not attempt to light more than one burner at a time.
- Turn the **SPARK** knob clockwise one click. If the burner fails to light, continue turning the **SPARK** knob clockwise until the burner lights.
- To extinguish the top burner flame turn the appropriate burner knob clockwise to OFF.

WARNING: Top cover must be open when the cooking surface is in operation. Do not cover the oven vent openings while the oven is in operation.

Burner Grate

The burner grate is attached to the cooktop cover by two spring clips located on the underside of the cooktop cover. The burner grate can be separated from the cooktop cover for cleaning purposes. Place a towel down onto the countertop next to the cooktop. Lift the cooktop cover up by the front corners, just high enough to clear the top of the burners. Pull the cooktop cover toward the front of the cooktop and lift it away. Place the cooktop cover upside down onto the towel. Squeeze both of the grate spring clips to remove the grate from cooktop cover.

WARNING: If you smell gas, extinguish all open flames and turn off the main gas supply. Liquid propane is highly volatile, highly explosive and extremely dangerous. Explosion, fire, property damage, injury or death can result. Propane is a "heavy" gas and will lay on the floor and "hide" in corners. Open all windows and doors. Do not touch any electrical switches. They may cause a spark which can ignite. Contact a qualified service center to have the problem correctly diagnosed and repaired before resuming operation.

Lighting Oven Pilot

- Push in the oven control knob and rotate counter-clockwise to **PILOT ON**.
- Light the oven pilot located near the back of the oven, under the broiler shelf and to the left of the oven burner.
- Set the oven control knob to Pilot ON to maintain pilot flame. The oven and broiler are now ready for operation. The oven pilot has been factory set and requires no further adjustment.
- To extinguish the oven pilot push in the oven control knob and rotate clockwise to OFF.

WARNING: Extinguish all pilots when refueling or traveling. Do not block vents in oven with cookware or other objects.

Tips

1. A yellow flame is an indication of incorrect fuel/air ratio. Lowered BTU output and carbon build up can occur.
2. When cooking at an altitude above 5,000 feet the flame may change appearance and the flame BTU output will be lowered. Allow extra cooking time.
3. Do not allow the tips of the flame to extend beyond pan or pot edge. When this occurs heat is wasted and possibility of injury increases.
4. Remove the cooktop cover to help keep the underside of the cooktop clean. Place strips of aluminum foil on the cooktop floor pan and under burners. Do not restrict air flow of mixture tubes.
5. Pre-heat the oven for 10 minutes prior to use.

Cleaning & Maintenance

- Clean all surfaces as soon as possible after boil overs or spillovers.
- Use warm soapy water to clean the burner grates, cooktops, painted surfaces, porcelain surfaces, stainless steel surfaces and plastic items on your range or cooktop. Grit or acid-type cleaners may ruin the surface.
- Use only non-abrasive plastic scrubbing pads.
- Do not allow foods containing acids (such as lemon or tomato juice, or vinegar) to remain on porcelain or painted surfaces. Acids may remove the glossy finish. Wipe up egg spills when cooktop is cool.
- Allow porcelain surfaces to cool before cleaning. Burns from the heated surface may occur or the cooktop porcelain can crack.

Regular cleaning with a soft cloth and a warm detergent solution is generally enough to keep the cooktop clean. Wash, rinse and dry with a soft cloth. Thoroughly clean the cooktop when it is cool. Use a dry cloth or paper towel while the surface is warm to the touch to clean splatters or spills. Cleaning will be more difficult if spills bake on to the surface. Glass cleaner sprayed on a paper towel should be used for the cooktop surface. Do not spray glass cleaner directly on the surface. DO NOT use abrasive cleaners or steel wool. Harsh cleansers like bleach, ammonia and oven cleaner should NEVER be used. The surface burner grate and caps should be cleaned using the same guidelines as the cooktop surface.

Porcelain Enamel:

Porcelain enamel is a type of glass fused on steel at a very high temperature. It is not extremely delicate but must be treated as glass. Sharp blows, radical surface temperature changes, etc., will cause enamel to chip or crack. Some foods such as vinegar, lemon juice, tomatoes and milk contain acids which can dull the finish of the enamel. To avoid dulling the finish, wipe up the spill before it is baked on. The surface is glass and must be given consideration when cleaning. Steel wool and coarse, gritty cleanser will scratch or mar the surface. Any gentle kitchen cleanser powder or grease cleaner will be suitable. For further information on care and maintenance of the porcelain, call "*Hopes Cultured Marble Polish*" at 800-325-4026.

COOKTOP RANGE (Optional)

The optional cooktop range is operated and maintained the same as the range oven without the oven. This option allows for a wider variety in floor plans and provides more storage space.

AIR CONDITIONER - ROOF

The roof air conditioners operate from 120 Volts AC only. Operation is controlled by a 12 Volt DC wall thermostat. The electronics in the wall thermostat send a signal to the roof air conditioner's circuit board. The circuit board controls the desired roof air conditioner functions. The refrigeration process in the roof air conditioner is primarily the same as the dash air conditioning or a household type refrigerator. It functions as an enclosed system. The refrigeration process repeats in a cycle. The refrigerant is drawn into the compressor where it is heated from compression. The high pressure vapor is sent to a condenser where the heat is expelled into the atmosphere. The vapor leaves the condenser as a high pressure liquid. This liquid is forced into a metered capillary tube and then into the evaporator or low side pressure. The refrigerant changes from liquid form to a vapor as the heat is extracted. The vapor is drawn back into the compressor to start the cycle again.

NOTE: Air conditioning systems will freeze the moisture in the air depending on the humidity content. Under high humidity conditions it is recommended to leave the HIGH/LOW switch to the HIGH position.

Operation

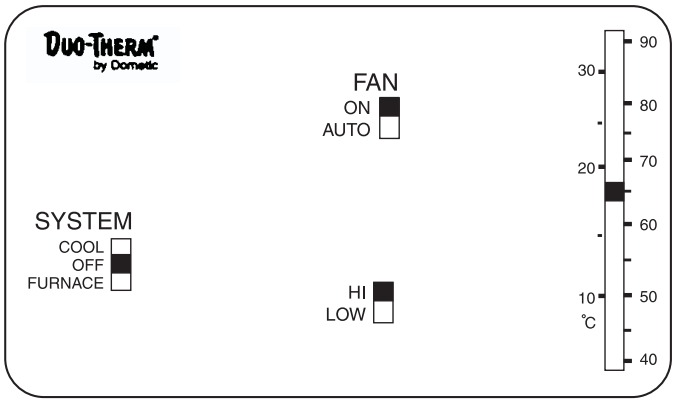

The roof air conditioner will operate only when the following needs have been met:

- 120 Volts AC from either shore power or the generator is supplied.
- The battery cut-off switch is in the ON position and house batteries are charged.

Thermostat Operation:
The thermostat operates the roof air conditioner and the furnace.

Roof Air Operations:

- **FAN ONLY -** Move the **FAN** switch to the **ON** position. Use the **HIGH** or **LOW** switch to set desired fan speed. Set the thermostat to desired temperature.

- **COOL -** Move the **SYSTEM** switch to **COOL**. Move the **FAN** switch to **ON**. Set the thermostat to the desired temperature. Use the **HIGH** or **LOW** switch to set desired fan speed.

NOTE: If the motorhome is equipped with the optional second roof air conditioner for the bedroom the thermostat operation is the same; however, the SYSTEM FURNACE position is non-functional.

FURNACE

The furnace and its related components are 12 Volt DC operated, using LP-Gas as the fuel source. Electronic circuitry (automatic ignition) is used to ignite the burner. The furnace uses outside air for the burner combustion and exhaust is expelled through the outside vent. Inside air is drawn into the furnace and blown across the internal heat exchanger. Heated air is then discharged through ducted hoses which can be run throughout the motorhome. A warm air discharge is incorporated to heat the motorhome's holding tanks.

Operation

The furnace operates in the following manner: The wall thermostat sends a signal to the front roof air conditioner circuit board, which closes a relay. Closing a relay sends an electrical signal to the furnace to begin the ignition cycle. There is a small time delay before the blower motor begins. Once the blower motor attains a predetermined speed it will close the air prover or sail switch. The sail switch, which is now closed, sends the electrical signal through a high temperature protection switch, then to the automatic ignition circuit board. After the thermostat is satisfied, the gas valve closes and extinguishes the burner. The blower motor stops about two or three minutes after cool down.

The furnace will operate when the following conditions have been met:

1. The LP-Gas valve on the LP tank is open and the LP-Gas valve at the furnace is on.
2. The house batteries in the motorhome are charged.
3. The battery cut-off switch at the entry door is in the ON position.

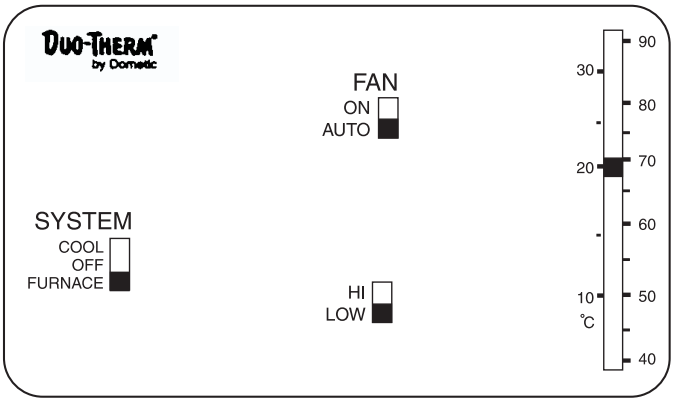

Using the Furnace:

1. Set the **SYSTEM** switch to **FURNACE**.
2. Set the **FAN** switch to **AUTO**.
3. Set desired temperature.

WARNING: IF YOU SMELL GAS extinguish all open flames and turn off the main gas supply. Liquid propane is a highly volatile, extremely dangerous gas. It can explode or ignite, which may result in property damage, injury or death. Propane is "heavy" and can "float" on the floor or "hide" in corners. Open all windows and doors. Do not touch electrical switches. They may spark, which can ignite. Keep all open flames, spark producing devices and smoking material out of the area. Contact a qualified service center to have the problem correctly diagnosed and repaired before resuming operation.

CAUTION: Do not store any items or materials in the furnace area. Restricted air flow may hamper furnace operation leading to failure and/or fire hazard.

NOTE: The automatic ignition circuit board will attempt to light the burner three times before the ignition board will go into "lock-out." If the burner does not light the furnace blower motor will continue to run and the wall thermostat will have to be cycled off.

NOTE: When washing the exterior of the motorhome, avoid a direct stream of water into the outside furnace vents. This can damage the furnace.

Tips

- After the motorhome has been removed from storage, operation of the furnace may produce a musty smell during the first couple of cycles.
- Operating the furnace at an altitude above 5,000 feet reduces the BTU output due to air/fuel ratio.
- The furnace will periodically need to be serviced by a qualified technician. If the furnace exhibits unusual symptoms or noises, or has an unusual odor when operating, have the furnace checked or serviced.

If the Furnace Fails to Light

- Make sure the LP-Gas supply valve is open.
- Make sure the battery cut-off switch at the entry door is ON.
- The furnace will not light if the blower motor is not spinning to its specified speed. This may be due to a low house battery charge condition. Hook-up to shore power and start the generator or main engine to charge the batteries.
- If the blower motor does not spin and the necessary power requirements have been met, use a screwdriver or coin to open the furnace access panel outside of the motorhome. Make sure the **ON/OFF** switch is ON and the circuit breaker is pushed IN.

WARNING: If you smell gas and the blower motor is spinning, do not attempt additional furnace operation. This may result in an explosion, fire or personal injury. Contact a qualified technician.

WATER HEATER

The motorhome is equipped with a six gallon water heater as a standard feature. The water heater in the motorhome will heat water using two different methods. The first method is 120 Volts AC, supplied either by shore power or the on board generator. The second method is LP-Gas. The 120 Volt AC uses a heating element like those found in a house style water heater. The 120 Volt AC method is efficient if shore power is available. The LP-Gas incorporates the use of an automatic ignition circuit board operated by 12 Volt DC. The water temperature is controlled by two thermostats: One for the 120 Volt and the other for the LP-Gas. The temperature is preset by the water heater manufacturer. Water is pumped into the bottom of the water heater tank where it is heated and discharged out of the top of the tank upon usage. For easy winterization the water heater is equipped with a by-pass valve. A safety feature included is a temperature pressure relief valve. The water heater has an aluminum clad tank. An anode is not necessary.

NOTE: The automatic ignition circuit board will make three attempts to light the burner. If the burner does not light by the third attempt the ignition circuit board will go into "lock-out." Cycling the on/off switch will reset the ignition board.

NOTE: Do not operate the water heater by either function without water in the water heater tank. This can damage the thermostats and the electric heating element.

Before Using the Water Heater

Before using the water heater, purge all trapped air from the water system. To purge the air and pressurize the system, fill the fresh water tank by using the on board water pump or hooking up to city water. Check the tank for any obvious water leaks. Once the system is pressurized turn the hot and cold valves on for each water faucet, one at a time, inside and outside of the motorhome. Run each faucet until a steady stream of water with no air bubbles or air pockets is present. The water heater does not need to be operating while this is being done.

WARNING: IF YOU SMELL GAS extinguish all open flames and turn off the main gas supply. Liquid propane is highly volatile, highly explosive and extremely dangerous. Explosion, fire, property damage, injury or death can result. Propane is a "heavy" gas and will lay on the floor and "hide" in corners. Open all windows and doors. Do not touch any electrical switches. They may cause a spark which can ignite. Evacuate the motorhome and shut off the LP valve. Contact a qualified service center to have the problem correctly diagnosed and repaired before resuming operation.

Operation

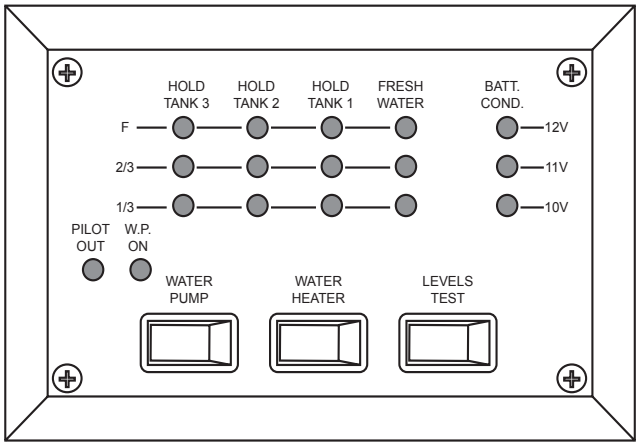

The water heater will operate when the following conditions have been met:

- 120 Volt AC has been supplied either from shore power or the generator.
- The LP tank valve is open.
- The battery cut-off switch at the entry door is ON.
- The house batteries are charged.

LP-Gas Operations:

- Make sure the LP-Gas is turned on.
- Turn the water heater switch to the the ON position. The water heater will make an audible "roar" from the burner when ignited. The indicator light will illuminate briefly then go out when the water heater is lit. The indicator light will glow steady when the ignition cycle has gone into "lock-out."

NOTE: It is not recommended to operate the water heater on LP-Gas while the motorhome is in transit.

The 120 Volt AC Operations:

- Have either shore power or the generator supplying AC voltage.
- Turn on the RED piloted switch located above the vanity sink.
- The heating process occurs at a quicker rate with both LP-Gas and 120 Volt AC operations activated.

Pressure - Temperature Relief Valve

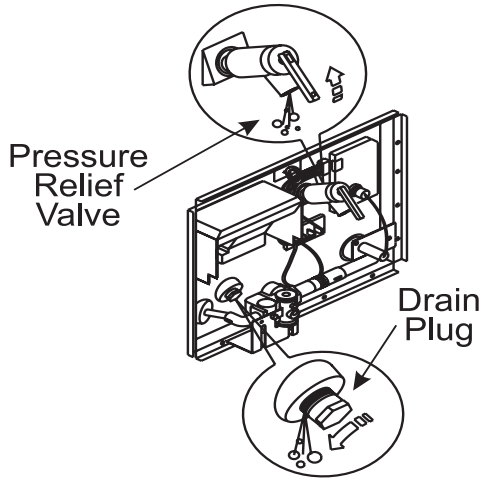

The water heater is equipped with a **Pressure-Temperature relief valve**. The water heater may discharge at the Pressure-Temperature relief valve during the heating cycle, due to thermal expansion of water. The Pressure-Temperature relief valve is designed to open if the water temperature within the heater reaches 210° F (98.8° C), or if the water heater pressure reaches 150 psi. This can be related to the fact the motorhome utilizes a closed system. A discharge is a normal occurrence and is not necessarily a faulty valve. The water heater has an internal air pocket to reduce the possibility of dripping or weeping. Eventually, the expansion of the water will absorb the air pocket. When this occurs, the air will have to be replaced utilizing the following procedure.

CAUTION: Ensure the water heater storage tank is cool prior to making any check of the valve.

Step 1: Turn **OFF** the water heater.
Step 2: Shut **OFF** the incoming water supply.
Step 3: Open the closest hot water line of the motorhome.
Step 4: Pull the handle of the relief valve until the flow of water stops.
Step 5: Allow the relief valve to snap shut, close the hot faucet and turn **ON** the water supply.
Step 6: Turn **ON** the water heater.

The air pocket is re-established and the process does not need to be repeated until the next discharge of water. If the discharge does not stop, contact a qualified service center to evaluate the valve and make any required repairs.

Burner Compartment

Periodically check the service compartment and screen in the door on the outside of the motorhome to ensure no foreign material has accumulated which will prevent the flow of combustion and ventilating air.

Water Heater Bypass System

The water heater bypass is a valve located on the back of the water heater. By turning the valve to **BYPASS** position you can divert water away from the water heater. The water heater should be in the **BYPASS** position when winterizing. Bypassing the water heater will keep antifreeze out of the water heater, if antifreeze is used for winterization.

For water heater operation turn valve so that handle points to **NORMAL FLOW**.

Draining & Storage

If the motorhome is to be stored for a long period of time or during the winter months, the water heater must be drained to prevent damage from freezing. Refer to “Winterizing” for instructions. Be sure to refill the water heater with water before resuming operation.

- Turn off water heater when not in use to conserve LP-Gas.
- The water heater tank capacity is six or ten gallons. When running the shower, conserve the heated water by shutting the shower water off when not in immediate use.
- Use caution when adapted to 30 amp shore service. When the water heater element is in operation it will use approximately 12 amps. Appliances may need to be operated in sequence to avoid tripping a breaker.

- The temperature and pressure (T & P) safety relief valve on the outside of the water heater is set to open at 210° F or 150 psi. When water temperature and pressure reach these settings the valve may drip until the pressure has dropped. Avoid opening the T & P valve manually as it may continue to leak. The valves can be purchased from most hardware stores.

WARNING: Before beginning any service or work on the water heater make sure the LP-Gas is turned off, the 120 Volt AC source has been disconnected and the 12 Volt DC source has been disconnected. Failure to do so can result in explosion, fire or injury.

Troubleshooting

- If water heater fails to light check the outside burner tube for obstructions. Spiders may make nests in the burner tube.
- If the indicator light on the monitor panel does not light, and the water heater does not light, verify the battery cut-off switch at the entry door is on or check for a blown fuse in the house distribution panel.
- If the switch at the galley is on, but there is no hot water, check the ON/OFF switch located outside behind the water heater inspection panel.
- If the 120 Volt piloted switch does not light check the AC source, breaker, shore cord connection or transfer switch.

WASHER/DRYER PREPARED

If the motorhome was not ordered with an optional washer/dryer, it will have a washer/dryer preparation package installed from the factory. The washer/dryer “prep” package includes the following items:

1. Color coded water supply lines. A red line for hot; a blue line for cold.
2. An 1½” waste water drain line with threaded cap, p-trap, and an automatic vent cap. This will drain the waste water into the grey water holding tank.
3. A 120 Volt receptacle located in the compartment.

NOTE: Sidewall dryer vents are not part of the prep package. If a sidewall vent is to be installed be sure to properly seal vent to sidewall.

If a washer/dryer is to be installed at a later date be sure to follow all the manufacturer installation instructions. Listed here are further instructions which should be adhered to for safe and reliable operation:

- Do not connect the clothes dryer exhaust duct to any other duct, vent or chimney.
- Do not terminate the exhaust duct beneath the motorhome.
- Be sure to use proper length fastener when attaching exhaust vent to exterior sidewall. Stainless steel fasteners are best suited for this as they will not rust.
- If the cabinet or closet in which a washer/dryer is installed does not have vented louvered doors, the manufacturer's installation instructions may require installation of vented doors or vents to be installed in the doors. This is for sufficient circulation of drying.

WASHER/DRYER (Optional)

The automatic washer/dryer has a capacity of up to 10 lbs. (4.5 Kg.) of dry clothing. It is front loading with an extra large door opening for easier access. It has five wash cycles, in addition to extra rinse and spin cycles.

- The washer/dryer operates on 120 Volt AC.
- To operate the washer/dryer you will need to be plugged into shore power.
- The washer/dryer water use will be approximately 16 gallons of water.

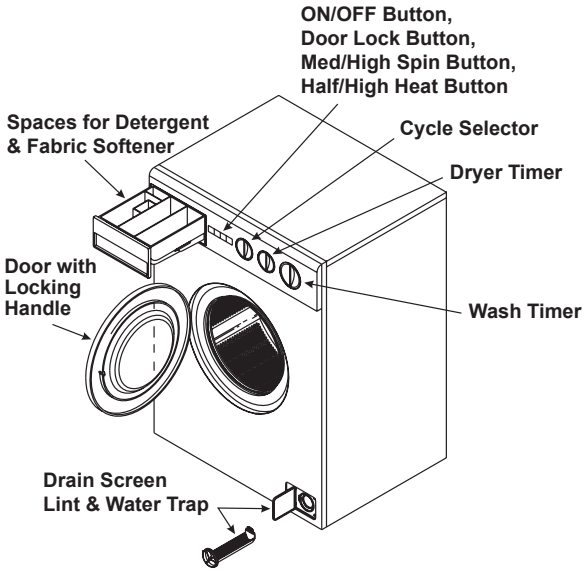

Operating Instructions

Before using the washer for the first time wipe the inside and outside with a damp cloth to remove any travel dust that has accumulated. We recommend operating a rinse cycle to rinse out the washer.

To begin a wash load:

- Sort and pre-treat clothes (specific directions under sorting).
- Add the measured amount of detergent suggested by the package directions (maximum two tablespoons).
- Load the clothes loosely into the washer. Close the washer door.
- Turn the cycle selector knob to the desired temperature setting.
- Decide which washing cycle you wish to use. Turn the timer knob clockwise to the desired wash setting.
- Select High or Medium spin (only for regular washing).
- Press the push button ON.
- After the cycle is complete, wait two minutes for the door lock to release before attempting to open the door.

WARNING: Do not wash or dry articles that have previously been cleaned, washed, soaked or spotted with gasoline, dry cleaning solvents or other flammable or explosive substances. They give off vapors that could ignite or explode. Do not add gasoline, dry cleaning solvents or other flammable or explosive substances to the wash water. Do not use heat to dry articles containing foam rubber or similar textured, rubber-like materials. Clean the lint screen if applicable (located on the back of the washer in the top left corner) after each use and keep the area around the exhaust opening and adjacent areas free from the accumulation of lint, dust and dirt.

Cleaning the Drain Screen

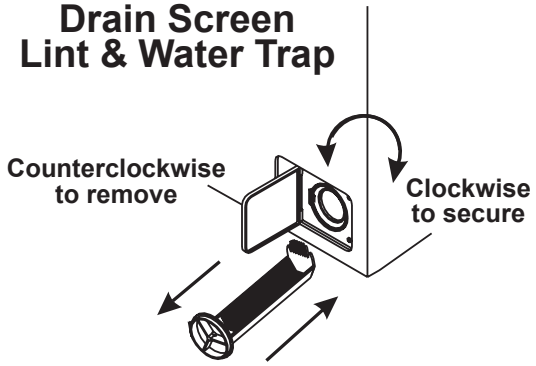

The removable drain screen, which protects the pump from lint and foreign matter, needs to be cleaned periodically. The frequency in which it is cleaned depends upon the type of clothes that are washed. Cotton articles produce more lint than nylon articles. Under no circumstance should the drain screen be removed while the machine is full of water. To clean the drain screen (on an empty machine), open the service door by pressing on the left hand side. Place a cloth or shallow tray under the drain screen housing to catch any remaining water that may drip out. It may be helpful to first set the machine to spin then remove the drain screen. This procedure reduces the amount of water released. Turn the drain screen counterclockwise and pull the drain screen out. Clean the screen to remove any dirt and lint. To replace the screen, slide it back into the housing and turn it clockwise to secure. Close the service door.

NOTE: Check for water leaks before using the washer after removing and replacing the drain screen.

Cleaning the Washer/Dryer

Occasionally wipe the exterior cabinet of the washer/dryer with a damp cloth or sponge. Wipe dry with a soft cloth. Do not use polish on plastic trim. Clean the interior with one cup of chlorine bleach mixed with two cups of granular detergent. Run the washer through a complete cycle using the hot water. Repeat the process if necessary. Remove hard water deposits using only cleaners labeled as washer safe. Wipe the inside of the washer/dryer door with a soft cloth to remove any moisture. Periodically apply a thin coat of paste wax to the inner door, especially to the area which is immediately next to the door window. This will protect the door finish from laundry spills and discoloration.

NOTE: Should the washer/dryer need removal for service, care should be taken as the washer/dryer weighs approximately 185 lbs. Proper accommodations should be made to avoid risk of injury.

Winterizing the Washer/Dryer

To winterize your washer/dryer follow the instructions below to avoid damage to your unit due to freezing:

1. With the unit off, remove the wash filter to allow the water remaining (in the pump and drain hose) to be evacuated. Replace the filter.
2. Close the inlet shut-off valve located at the manabloc water system.
3. Open the low point drains to drain all the water.
4. In cold climates air should be used to blow out the system.
5. Install the water pressure regulator on a short water hose. Connect it to the water system. Use a air hose connector on the female end as this reduces pressure. Make sure one or more faucets are open.

If antifreeze is being used in the system follow these instructions:

1. When putting antifreeze into the water system of the motorhome, set the washer to a warm/warm fill setting and allow water to flow into the unit until the antifreeze is detected.
2. Slowly advance the timer to a rinse cycle and allow the water to flow for 10 seconds. Advance the unit to a spin cycle to remove the majority of the water from the unit.
4. With the unit off, remove the wash filter from the unit. This will allow the water remaining in the pump and drain hose to be evacuated. Replace the filter.
5. Any water remaining in the unit should contain antifreeze and be protected from freezing.

NOTE: When placing the unit back into service, allow the unit to operate for one complete cycle before doing laundry to ensure all antifreeze has been purged from the unit.

NOTES

5

INTRODUCTION

This section covers the basic operation and care of various types of equipment found in the motorhome, most of which are provided for entertainment and comfort. More detailed information about specific equipment may be found in that particular manufacturer's manual. Optional equipment will also be discussed in this section which may not apply to all motorhomes.

Detailed information with CAUTION or WARNING instructions for the various electronics, other than what is provided in this section, can be found in the manufacturer's manual.

ENTRY STEP
- Operation

The entry step features amber lighting under the step, automatic retraction with the ignition key in the RUN position and a last out feature. Located to the left, just inside the entry door, is the step switch.

Operating the Entry Step:

1. With the entrance door open, turn the step switch on.
2. Close the door. The step should retract and lock in the UP position. The step light will remain on.
3. Open the door. The step should extend and lock in the "down" position with the under step light on. The step will retract when the door is closed.
4. The step is equipped with a power switch. When the switch is turned off, the step should remain in the extended position with the door closed and the under step light off. Close the door and turn on the ignition switch. The step will retract for travel. To hold the entry step in the retracted position proceed with the following:
   - Turn the engine ignition switch off.
   - Wait 15 seconds and then turn the power step switch from off to on, then back off again. The step will stay retracted until the step switch is turned ON, or the ignition switch is turned on. The retracted position is useful for high curbs or on boat ferries.
5. With the power switch off, the step extended, the entrance door closed and the ignition turned on the ignition override system will go into effect and the step will automatically retract.
6. Turn the ignition off and open the door. The step will extend and lock in the "down" position. This is the "last out" feature. When the ignition is on the step will always activate with the door movement, regardless of the power switch position.

Tips

If the step fails to operate:

- Verify that the step switch is **ON**.
- Check the main power supply for the step. A 20 amp auto reset 12 Volt DC circuit breaker is located on the rear run plate.
- A magnetic door jam switch is used to control step operation. Use a separate magnet to apply a "trigger" to the door jam switch. Rotate test magnet to align polarity field.
- A five amp ATO blade fuse is used to illuminate the **STEP OUT** dash warning light. The fuse is located on the front run plate.

WARNING: If the motorhome is driven with the step in the extended position there is the possibility of causing major damage to both the step and the motorhome.

Maintenance & Lubrication

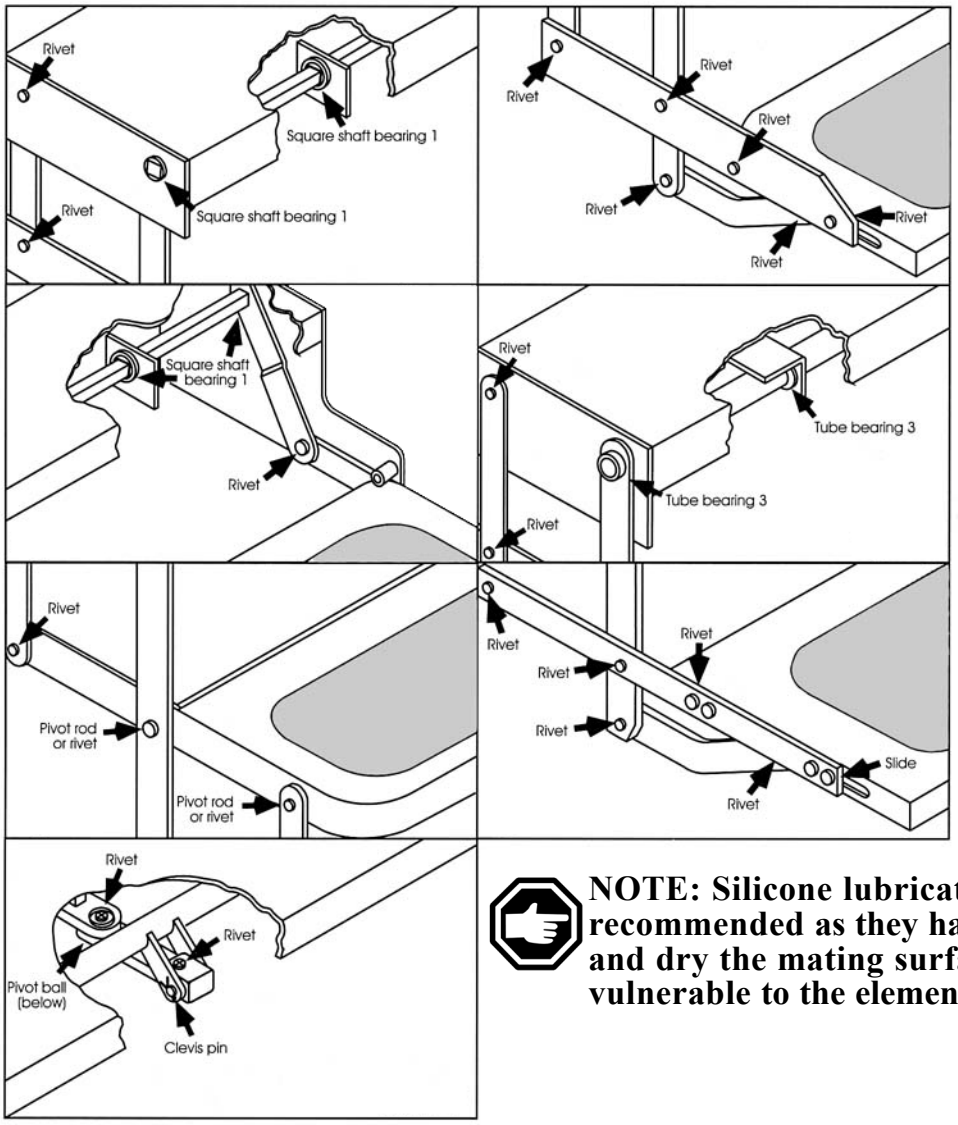

Clean all mud, salt and road grime from the step before lubricating. Lubricate all moving parts (bearings, pivot points, slides, clevis pin and the drive linkage ball) every 30 days with a good quality heat and moisture resistant penetrating grease. ***Kwik Lube Spray Grease*** is specially formulated to lubricate ***Kwikee Electric Steps*** and it is also recommended for lubricating all moving parts. (Refer to the illustration.)

NOTE: Silicone lubricates and WD-40 are not recommended as they have a tendency to evaporate and dry the mating surfaces which leaves them vulnerable to the elements.

STEPWELL COVER
(Front Door Models Only)

The motorhome is equipped with a sliding stepwell cover that is extended and retracted by the use of a dual action air cylinder. The air cylinder is controlled by an electrically operated air valve. The air solenoid, known as a “MAC” valve, receives air pressure from the front air tank. The “MAC” valve will direct the air pressure to either side of the dual action air cylinder, moving the stepwell cover in or out. The stepwell cover will not operate without sufficient air pressure (approximately 60 psi).

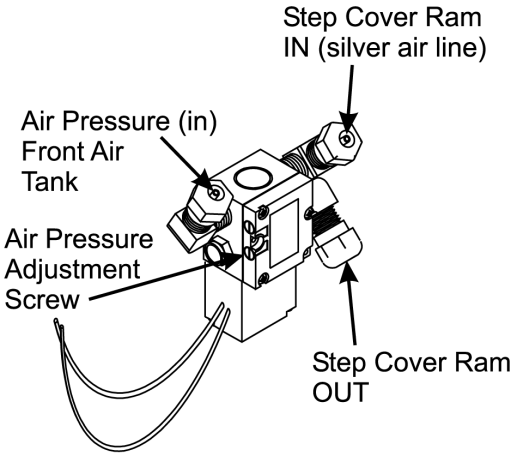

CAUTION: The stepwell cover is under air pressure. When operating the stepwell cover be sure there are no pets, shoes or other obstructions in the stepwell area. Do not operate the stepwell cover while standing in the stepwell area.

Adjustments

The “MAC” air valve is located in the front of the motorhome, behind the generator door mounted to the frame. The easiest way to identify the location is have someone operate the stepwell cover with the generator door open and listen for the release of air.

The “MAC” air valve has two adjustment screws. The adjustment screws regulate the air flow to either side of the air cylinder. Adjusting the screws will affect the speed in which the air cylinder moves in or out. Clockwise adjustment on the screw will decrease air flow. Counterclockwise adjustment on the screw will increase the air flow. For proper stepwell cover adjustment it is recommended that adjustments be performed by a qualified service person.

WARNING: When adjusting the stepwell cover clear the stepwell area of obstructions, pets or persons. Do not adjust the stepwell cover while stepwell area is occupied.

ENTRY DOOR
Latch Adjustment

The entry door is adjusted at the factory and tested for all operations. The door incorporates three separate seals to eliminate wind noise during travel. The door uses two separate locks for safety and security. One locking system is the door handle and the other is a dead bolt. The door handle incorporates a primary and secondary latching system. This is used to ensure secure and safe latching. There are adjustments which can be made to help maintain entry door performance.

Adjusting the Entry Door Latch:

- Determine which bolt needs adjustment.
- Slowly close the entry door observing the latch and strike bolt alignment. Do not attempt to latch if the alignment is off. If the alignment is correct, allow the latch to catch in the first (primary) position only.
- The latch should move to the second position with just slight pressure applied to the entry door. Upper and lower latches should be evenly timed. Press on the entry door to see if there is any further movement of the door.
- The entry handle should operate with little effort to open the entry door. An excessive amount of pressure indicates the bolts are set too far back.
- With a 5/8” inch box wrench or socket, loosen the movable strike bolt. Make all adjustments in small increments. Tighten the bolt firmly after making adjustments. The bolts should have slight up and down movement for vibration control in travel.
- Test the operation of the dead bolt lock to ensure proper functions.
- Silicone should be applied weekly to the entry door rubber gaskets to prevent squeaking while the motorhome is traveling. Use a one inch sponge paint brush, sprayed with silicone for easy application.

CAUTION: When operating the entry door ensure the dead bolt latch is fully in the unlock position prior to closing the entry door. Failure to do so can result in damage to the dead bolt and/or entry door.

Screen Door - Changing the Glass

Changing the Glass in the Screen Door:

- The screen slider is plexi-glass, the slider can be bowed for removal and replacement.
- Replace with new plexiglas and reverse the procedure.

Screen Door - Adjusting

Adjusting the Screen Door For Up and Down Location:

- Loosen the chrome bolts on the hinge side of the screen door. Four on the top and four on the bottom.
- There are slots in the steel hinge to allow up and down movement.
- There are four Allen type screws on the top hinge and four on the bottom hinge to adjust the screen door so it fits properly to the door. The hinge should fit tightly to the trim of the door, when the screen door is latched to the door and the door is open.

• Check to see that the pad on the inside of the door is not sitting on top of the aluminum trim of the door. If it is, it will hold the screen door away from the door and you will not have a proper seal. If the pad is too large, re-size the pad.

SLIDE-OUT OPERATION *- Extending Main Room*

To Extend the Slide-Out Room:

• Move the driver seat forward before activating the slide-out room.
• Confirm that there is at least five feet of clearance outside the motorhome for the slide-out room to extend.
• Ensure the ignition key is in the OFF position.
• The park brake must be applied.
• The storage bay doors under the slide-out must be closed.
• Locate the two locking bar mechanisms on the top of the slide-out room inside the motorhome.
• Move the handles to the unlock position.

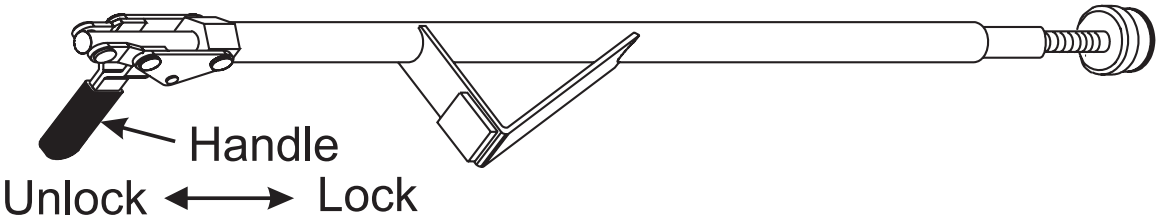

The Lock'R bar is used to secure the slide-out room.

• Release the bar mechanisms and remove the bars from between the wall and the top of the slide-out room. Store the bars for reuse before the motorhome is in motion.
• Locate the slide-out room control switch located in the passenger side overhead compartment above the entry door.
• Press and hold the slide-out room switch in the OUT position. The slide-out room will slowly move to the OUT position. To continue the room movement push and hold the switch in.
• Release the slide-out switch when the room is fully extended (a change in motor sound indicates extension). The slide-out drive motor will not stop automatically, the switch must be released.
• Level the motorhome with the leveling system.

WARNING: Move the drivers seat forward before activating the slide-out room. Ensure there is five or more feet of clear space outside the slide box prior to extending the slide room. The outside area must be clear of any obstructions which may hinder the movement of the slide room. Ensure there is sufficient clearance inside the motorhome. Never move the motorhome with the slide-out extended.

CAUTION: Dirt and grit trapped under the slide could result in damage to the floor. Continuous operation of the slide-out could cause a drain on the house batteries and damage to the slide motor from overheating.

CAUTION: Remove the LOCK'R bar before moving the slide-out room. Damage can result if it is left in position. Holiday Rambler is not responsible for damage resulting from operating the slide-out room with the LOCK'R left in position.

NOTE: Slide-out room operation should be performed with a full air suspension system. It is not recommended to extend the slide room in snow, sleet, ice or freezing rain. There may be extensive damage resulting from the awning freezing up.

Retracting Main Room

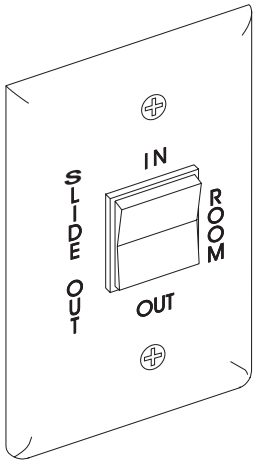

To Retract the Slide-Out Room:

- Check for sufficient clearance inside the motorhome before retracting the slide-out room.
- Clean the floor, if applicable, to ensure there is no dirt or grit that could result in floor damage during slide-out retraction.
- Press and hold the switch in the **IN** position. The slide-out room will move slowly in. To stop the slide-out room before the room reaches the IN position, release the switch. To continue the room movement, push and hold the switch in. The motor will change tone when the slide-out room is fully extended.
- Release the switch.
- After the slide-out room is all the way retracted, locate the two removable locking bar mechanisms. Place the bar mechanisms between the wall and the top edge of the slide-out room. The Lock'R has a built in spring to preset the tension. Move the handle to lock the position.

NOTE: Be sure you have sufficient clearance on the inside of the motorhome (drivers seat, etc.) before you retract the slide-out room. If your motorhome has ceramic tile floor ensure the floor is clean before you retract the slide-out room. Dirt or grit that is trapped under the slide-out room can scratch the floor surface. Never move the motorhome without having the slide-out room retracted.

Awning - Main Slide-out

The motorhome is equipped with a slide-out awning that will automatically roll out with the slide room when it is extended. When the slide room is extended, the awning can then be rolled out completely as a window awning. The slide-out awning has two devices to help prevent the awning from "billowing" while traveling. The first device is a pair of anti-billow studs, which are located above each end of the awning roller tube. If the awning catches wind and begins to billow, the awning metal wrap will contact the anti-billow stud levering downward and engaging with a plastic gear preventing further unraveling of the awning material. The second device uses two metal wind deflectors which are positioned just below the awning. This helps prevent side winds from scooping under the awning and unwinding the awning material.

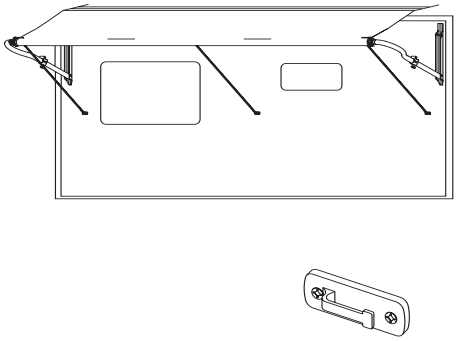

Awning at full extension.

CAUTION: The slide room and slide-out awning should be retracted during heavy winds or rain. Rain can be driven up under the slide-out awning and into the motorhome. The slide-out awning should be retracted in high wind conditions as damage can occur to the awning or motorhome.

NOTE: At least five feet of clearance is needed between the side of the motorhome and any objects, such as trees or fences, to allow the slide room and slide-out awning to be fully extended.

Manual Override - Main Slide-out

To move the slide-out room manually retract the motorhome leveling jacks (see "Leveling Jacks").

1. Open outside storage compartment doors underneath slide-out room.
2. Remove plastic covers from top of compartments to gain access to drive shaft and drive mechanisms.
3. To move the slide-out room move the lever on motor counterclockwise to release motor brake and turn the end of the shaft next to the gear box using a 7/8" wrench.
4. Once the room is in apply pressure to the wrench so that the room is sealed. Return the brake lever to its normal position to lock the room in place. Install the transit bar.
5. Take the motorhome to an authorized dealer for service.

NOTE: The slide-out room is heavy and may require several persons to push it into the retracted position. When the slide-out room is in the fully retracted position tighten the T-Handles to hold the room in place.

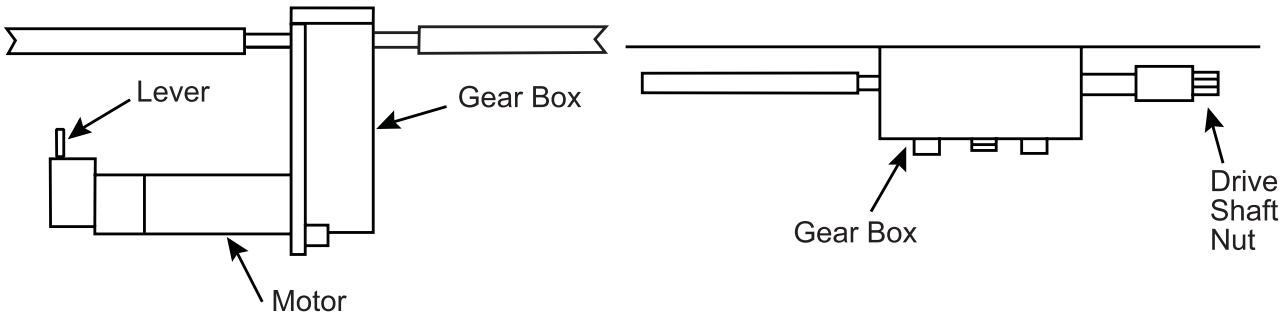

Before operation of the slide-out system:

- The path for the room to move is clear.
- The battery is fully charged and hooked up to the electrical system.
- The unit is level.
- The slide locks are removed.

WARNING: Confirm there is five or more feet of clear space outside of the motrhome before moving the slide-out room to the OUT position. Check that all cabinet doors are securely closed before extending or retracting the rooms.

CAUTION: Do not operate the slide-out room when the battery has been removed from the motorhome. Use with the converter only may damage the slide-out electrical components. Continuous operation of the slide-out room can drain the battery and damage the slide-out motor from overheating. Never move the motorhome without having the slide-out room retracted.

Extending - Bedroom

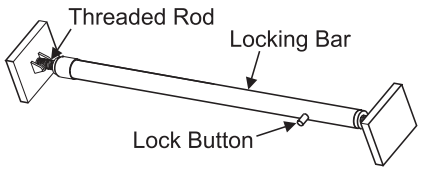

To Extend the Bedroom Slide:

1. Locate the two locking bar mechanisms on top of the slide-out room inside the motorhome. Push in on the lock button to release the bar mechanisms and remove the bars from between the wall and the top of the slide out room. Store the bars for reuse before the motorhome is moved. The slide lock may double as a towel bar or extra closet rod.

2. Press and hold the slide-out room switch in the OUT position. The slide-out room will move slowly to the OUT position. The drive motor will **not** stop automatically. To stop the slide-out room before reaching the OUT position, release the switch. To continue room movement, push and hold the switch in.

3. Release the switch, which will lock the room into position.

CAUTION: Dirt and grit trapped under the slide could result in damage to the floor. Continuous operation of the slide-out could cause a drain on the house batteries and damage to the slide motor from overheating.

CAUTION: Remove the slide lock bars before moving the slide-out room. Damage can result if it is left in position. Holiday Rambler is not responsible for damage resulting from operating the slide-out room with the slide lock bars left in position.

NOTE: Do not leave the slide-out in the extended position during severe weather. Conditions such as high winds or heavy rain may cause damage to an extended slide-out.

NOTE: It is not recommended to extend the slide room in snow, sleet, ice or freezing rain. There may be extensive damage resulting from the awning freezing. In the event the slide-out room is extended in snow, sleet, ice or freezing rain conditions, it is recommended you clear the awning and ensure free movement prior to retracting the slide room.

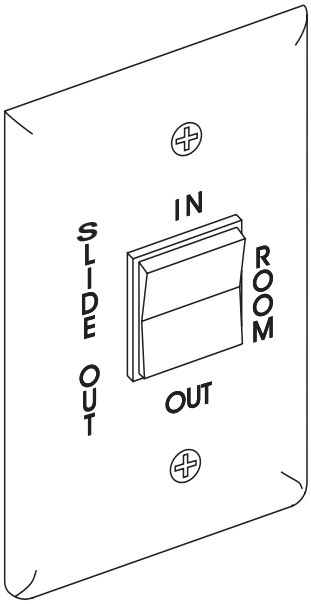

Retracting Bedroom

1. Check that there is sufficient clearance inside motorhome for the slide-out room.
2. If applicable clean the floor.
3. Remove any debris from the top of the slide-out room.
4. Press and hold switch to the IN position. To stop slide-out room before it fully retracts, release the switch. To continue the room movement, push and hold the switch in.
5. When the room is fully retracted, release the switch. The room locks into position.
6. After the slide-out room is retracted, place the two locking bar mechanisms between wall and top edge of slide-out room and lock into place.

Manual Override - Bedroom Slide-out

The bedroom slide-out system can be retracted in the event of a power loss.

If the room does not move when the switch is pressed:

- Check if the battery is fully charged and connected.
- Make sure the transit bars are removed.

WARNING: Do not work on the slide-out system unless the battery is disconnected. Make sure the floor is clean before retracting the slide-out room. Dirt or grit that gets trapped under the slide-out can cause damage to the floor.

After the previous items have been checked and the room still does not move when the slide-out switch is pressed, follow these simple steps to manually override the slide-out room:

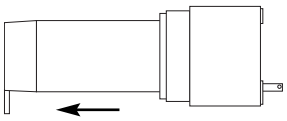

Brake lever.

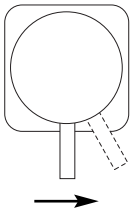

Rotate approx.30° counterclockwise to release the motor brake.

Manual Override for Bedroom Slide-out in 34” Models:

1. Disconnect the battery cables from the battery.
2. Lift up the mattress and base board to gain access to the slide-out mechanism.
3. If the bedroom slide-out motor has a lever on the back side, rotate the lever counterclockwise about 1/8th of a turn (looking from the rear of the motor) to release the brake that locks the room in place. If the motor does not have a lever, use a ½” wrench to remove the four motor mounting bolts. Remove the motor.
4. Use an appropriate wrench (a ¾” wrench/ratchet or an adjustable wrench) on the override to move the room in or out. The override is located on the opposite side of the slide-out rail from the motor.
5. Once the room is in apply pressure to the wrench so that the room is sealed. Return the brake lever to its normal downward position to lock the room in place. Install the transit bar (if so equipped). If the motor does not have a brake lever, apply pressure to the wrench so that the room is sealed and install the transit bar (if so equipped). If there is no motor lever and no transit bar, the motor must be mounted back onto the slide-out system to hold the room for transport. Because of this, the room may not be sealed from the environment.
6. Take the motorhome to an authorized dealer for service.

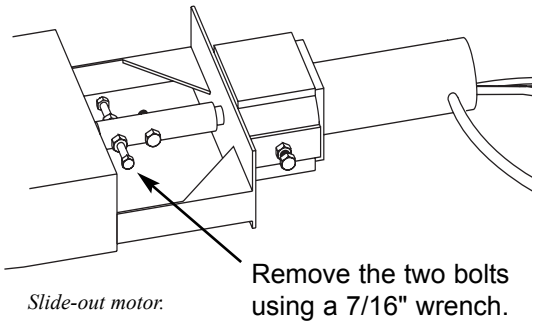

Slide-out motor.

Manual Override for Bedroom Slide-out in 36” Models:

1. Lift up the mattress and base board to gain access to the slide-out mechanism.
2. Disconnect the battery power from the slide-out motor.
3. The slide-out motor has a shaft with two bolts. Use an appropriate wrench (a 7/16" wrench/ratchet or an adjustable wrench) to remove the bolts. The bolts will need to be stored in a safe place to be installed after repairs have been completed.
4. The slide-out then can be pushed back in by a single person. Once the slide room has been manually retracted, install the locking bars to prevent the room from creeping
5. Take the motorhome to an authorized dealer for service.

Preventive Maintenance

The slide-out system has been designed to require very little maintenance. To ensure the long life of the slide-out system read and follow these simple procedures:

- The roof of the slide-out should be checked for debris such as pine needles, dirt, leaves, sticks, etc. If the slide-out has been out for a period of time, any debris left on the top may cause damage to the seals when being retracted. If debris is present wash with soap and water, then rinse.
- When the room is out visually inspect the inner slide rail assemblies. Check for excess build-up of dirt or other foreign material. Remove any debris that may be present.

SLIDE LOCK

The slide lock can be useful for other functions in the unit. It does not have to be stored when the slide room is extended. Some useful functions include a towel bar in the shower to dry wet clothing or an extra closet rod.

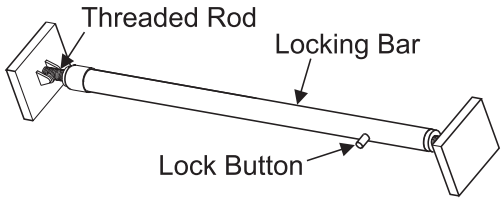

If the slide bar is used for other functions follow a few simple guidelines:

- Ensure the slide lock is straight as possible.
- Adjust the dimension nearest to the opening size. DO NOT GO LARGER.
- The feet can be adjusted until they are ¼" shorter than the opening.
- The foot on the brass bolt has 4 ½" of adjustment. Foot on the silver bolt has 1 ½" of adjustment.
- Ensure slide lock is in place tightly before use. Use caution when tightening if used on areas not reinforced.

Tip:

The silver bolt should face the outside wall, and then a clockwise rotation will increase tension.

CAUTION: Do not work on the slide-out system unless the battery is disconnected.

NOTE: Do not leave the slide-out in the extended position during severe weather. Conditions such as high winds or heavy rain may cause damage to an extended slide-out.

NOTE: It is not recommended to extend the slide room in snow, sleet, ice or freezing rain. There may be extensive damage resulting from the awning freezing. In the event the slide-out room is extended in snow, sleet, ice or freezing rain conditions, it is recommended you clear the awning and ensure free movement prior to retracting the slide room.

ENTERTAINMENT CENTER - HOME

Front Television Lock-Out

The motorhome is equipped with a remote control color television located above the pilot seat. The outlet for front TV is controlled by the ignition switch so that the front TV can only be viewed while the vehicle is at rest. The TV operates from 120 Volt AC power only, which can be provided by shore power, the generator or the inverter. Viewing time of the front TV from the inverter depends on the state of charge of the house batteries and any additional 12 Volt DC lighting being used.

Television Antenna

The television antenna is a manual crank up style antenna with built in electronics which use 12 Volts DC to “boost” signal strength. Signals that are weak or fuzzy can be amplified by turning on the boost switch in the passenger front overhead cabinet. The antenna and booster work together to provide the best possible picture for most situations. Certain conditions occur when no amplification is needed and in fact may make the picture worse. The television station will send a signal that resembles the waves or rings of water from a rock thrown into a still pond. The radiating television signal can hit an object such as a mountain and come back. The result one sees in the television picture is a double image. The antenna will receive a signal from the initial pass, then receive an additional signal from the rebound resulting in a split or double image. In this case the picture may be improved by no amplification or even lowering the antenna.

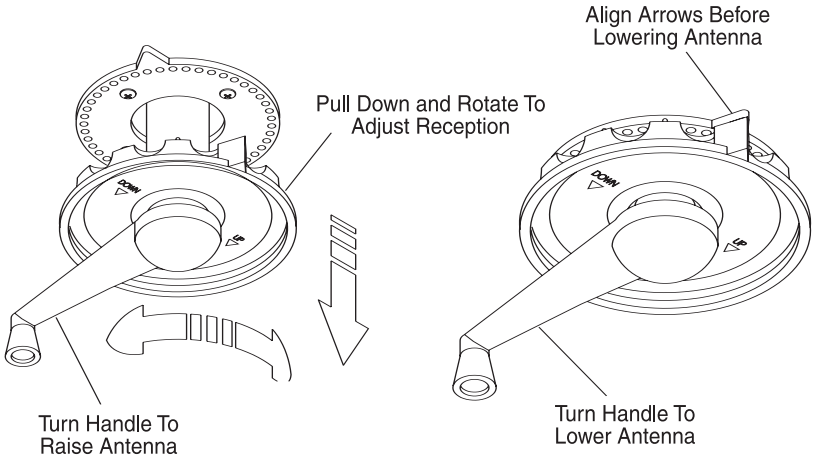

NOTE: Do not move the motorhome with antenna in the raised position, it can be damaged by tree limbs or wires.

WARNING Before raising antenna make an outside, visual inspection for any obstructions or overhead electrical wires. Damage to the antenna, severe shock, personal injury or death can occur from inadequate clearance.

To Raise The Antenna:

- Rotate the crank handle clockwise to raise the antenna (it is approximately 14 ½ turns).
- Pull down on the outside directional wheel and rotate the antenna until the best picture is obtained. The directional wheel is spring loaded.

WARNING: Do not raise a TV antenna near overhead electrical wires as contact may cause serious injury or death. The motorhome must not be driven with the antenna in a raised or partially raised position. Worm gear or worm breakage may result.

To Lower The Antenna:

- Pull down on the directional wheel and align arrows together.
- Rotate crank handle counter clockwise lowering antenna fully into the cradle. Make an outside visual inspection to ensure the antenna is properly stowed.

Boost Operation:

To boost the antenna signal to the TV or VCR, use the boost switch. Turn this switch to the ON position. Turn the boost switch off when not in use.

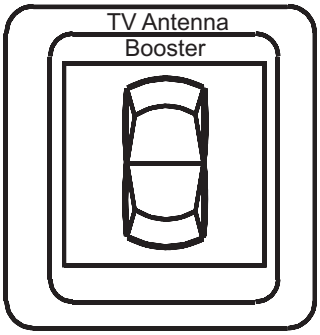

Hook-Ups - TV Cable, Computer & Telephone

The motorhome is equipped with cable TV and telephone hook-ups, located in the electrical service center. For convenience, there are auxiliary outlets located at the co-pilot seat and on the optional computer desk. This connection is set up for a phone or laptop computer to be used.

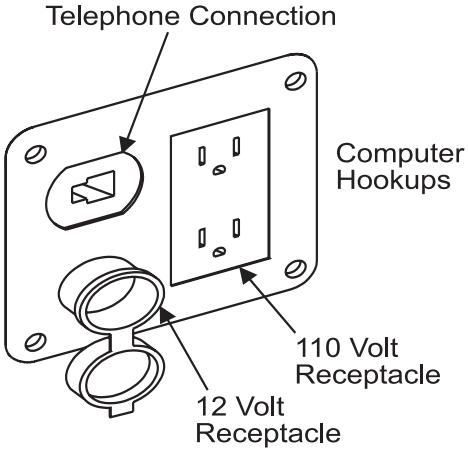

VCR & Bedroom Television (Optional)

The VCR and bedroom television operate from only 120 Volts AC, which can be provided by shore power, the generator or the inverter. Use the instructions given in the video selector box section to use these components.

Video Selector Box (Optional)

The motorhome is may be equipped with a video selector box located in the overhead cabinet. The selector box receives video and audio signals from three different sources: the roof mounted antenna, shore cable (auxiliary) or the optional VCR. The video selector box directs the signals to either the front or rear TV, and directs the signal from shore cable or the roof mounted antenna to the VCR. The selector box switches are divided into three groups: **TV1** (front TV), **TV2** (rear TV) and the **VCR**. Both the **TV1** and **TV2** button groups perform the same functions. For example: To watch the front TV (**TV1**) from the antenna, depress the **ANT** button in the **TV1** group. This will direct the signal from the antenna to the front TV.

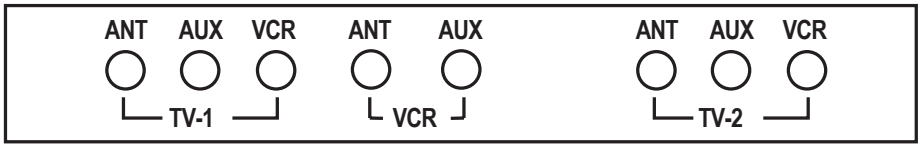

To Watch the front TV:

- Using the antenna, depress the **ANT** button in the the **TV1** group.
- Using the shore cable, depress the **AUXILIARY** button in the **TV1** group.
- Using the VCR, turn the TV to channel 3 and depress the **VCR** button in the **TV1** group.

To Watch the REAR TV (Optional):

- Using the antenna, depress the **ANT** button in the **TV2** group.
- Using the shore cable, depress the **AUXILIARY** button in the **TV2** group.
- Using the VCR, turn the TV to channel 3 and depress the **VCR** button in the **TV2** group.

NOTE: When watching TV by using the VCR (such as playing a tape) make sure the TV is tuned to channel 3.

Using the VCR (Optional):

- With the antenna, depress the **ANT** button in the **VCR** group.
- With the shore cable, depress the **AUXILIARY** button in the **VCR** group.

Tips:

1. If the picture is weak and the antenna boost is working, try moving the motorhome a few feet forward or backwards.
2. If it is weak or has no picture, check the video selector box to make sure the proper mode button has been selected.
3. If the signal is still weak, it may be a shorted or open coax. The coax cable is made up of two conductors. A center conductor, which is usually copper; and the ground, which is woven or braided aluminum. There is insulating material that separates the two conductors known as the die-electric. The ground and center conductor are to remain separate from one another. When installing a metal end onto the coax cable, use care so that none of the woven ground strands come in contact with the center conductor. A continuity tester is used to test for a suspected bad coax wire run. Unscrew both ends of the suspected bad coax run, and use the continuity tester to check between the center conductor and outside threaded ring. If continuity is present, the coax is shorted. To test for an open connection of a particular coax run, touch each end of the coax's ground or center conductor using the tester leads. Continuity should be present. For proper operation there should be continuity from one end to the other of both the ground and center conductor. No continuity should be between the ground and center conductor. Though damage does not usually occur from a shorted or open coax cable, picture quality is compromised.

Satellite System Prewire - DSS (Optional)

The motorhome may have been prewired for a roof mount DSS system. The prewire will consist of a ¾" flexible conduit, which will run from the front overhead to a spot marked on the roof. A telephone hook-up will also be provided for Pay Per View accessibility.

RADIO - DASH

The dash radio is a tuner and a compact disc player. It holds up to eighteen preset FM stations and six AM stations. Other features are an attenuate mode, loudness control, a clock and autoseek tuning. The compact disc player features are fast forward and reverse, random track play, repeat and pause. The radio power can be turned off from two different locations.

Operation:

- Turn on the house battery cut-off switch located at entry door.
- Turn on the radio **power** switch on the dash panel.
- To turn radio on: Push the **SRC** (source) button.
- To turn radio off: Push and hold the **SRC** button.
- To change between tuner and CD mode: With CD installed push the **SRC** button.

Function of Features:

- **Volume -** Use the **UP** arrow or **DOWN** arrow to increase or decrease volume.
- **A/M or F/M -** Use these buttons to select the desired band. Push **F/M 1, 2** or **3** to scroll through the three sets of preset stations. Use the **LEFT** or **RIGHT** arrow to change the station. Use the **AUTO/MAN** button for desired preference.
- **Attenuate or Loudness -** Press the **ATT** button to attenuate, or press and hold the **ATT** button for loudness.
- **MODE -** Use to: 1. Set the clock. 2. Change Left to Right speaker balance. 3. Fade sound Front to Rear.
- **Clock Set -** Push and hold the **MODE** button until screen changes then use the **LEFT** or **RIGHT** arrow to locate clock. Push and hold either **A/M** or **F/M** until hour changes then use the **LEFT** or **RIGHT** arrow to change the minutes.
- **Fade or Balance -** Press the **MODE** button. Use **A/M** or **F/M** to locate bass or treble, balance or fade. Use the **LEFT** or **RIGHT** arrow to change settings.

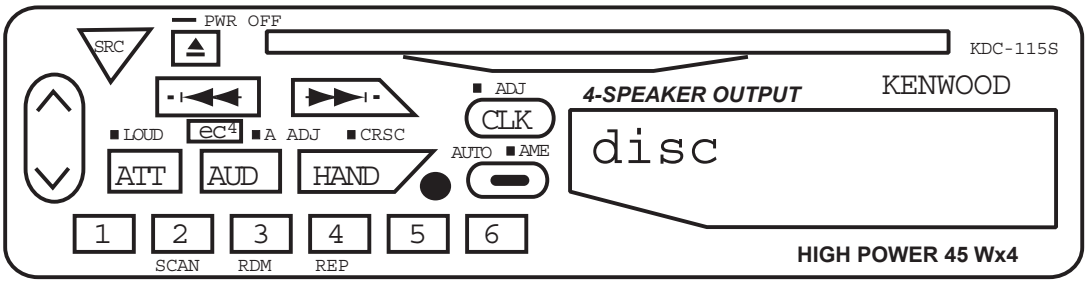

FAN - *Bathroom Fan*

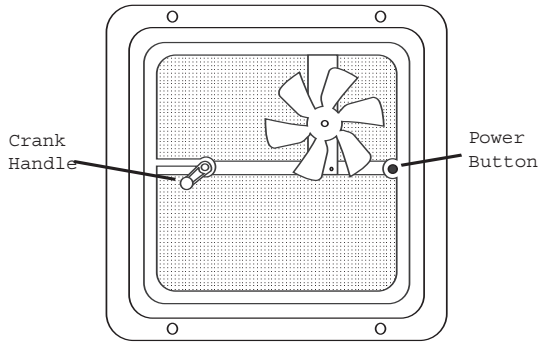

The motorhome is equipped with roof air vents which are manually operated. The vent is opened or closed by simply turning the crank handle in the desired direction. The fan which is for ventilation only, as it will not help cool the motorhome, can be operated by pushing the small power button. The vent must be opened before using the power fan. To close the power air vent, push in the power button to stop the fan and close the vent.

Exhaust Fan

The fan is a three speed fan with a **0** or **OFF** position. The fan will either pull in air or extract air from the motorhome. There are three controls located on the ceiling vent fan. The knurled knob is used to open the vent cover. The rotary knob will select the operating speed of the fan.

The **IN/OUT** switch controls the direction of the fan rotation. When the vent cover is opened approximately two inches, the fan motor will operate.The vent cover lid must be manually controlled during normal operations by the knurled knob.

To Operate The Fan:

- Open the vent cover using the **OPEN/CLOSE** knob.
- Set the fan switch to **ON**.
- Select the desired fan direction to **IN/OUT**.
- Select the desired fan speed on the Speed Control dial:
  - **0 = OFF.**
  - **1 = LOW.**
  - **2 = MEDIUM.**
  - **3 = HIGH.**

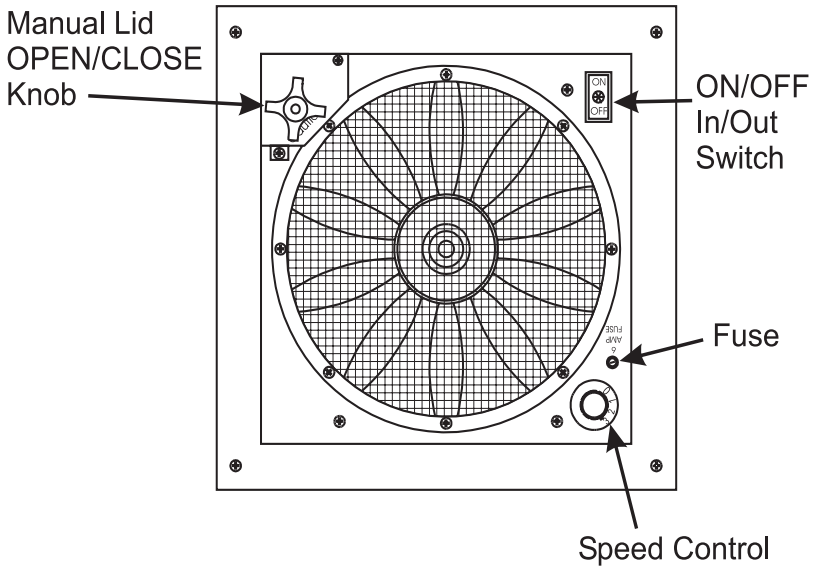

NOTE: If the speed switch is in the "0" position the fan operates only as a vent.

Tips

- To keep condensation from accumulating open the vent fan lids slightly to help the air circulate. Condensation occurs naturally from fluctuations in interior and exterior temperatures, humidity and dew point changes, steam from cooking, or boiling large amounts of water on the cooktop. Shower usage also produces condensation.
- If the fan fails to operate, check for a blown fuse either in the domestic fuse panel or the 6 amp fuse on the fan.
- To clean the screen, remove the eight screws holding it in place. Wash the screen using a non-abrasive soap and water. Re-install the screen and tighten the screws.
- Keep all the vents closed when using the Fantastic Fan Vent. Direct the airflow by slightly opening the window(s) on the shaded side of the motorhome to obtain the maximum air flow, especially on hot, sunny days. Close all the roof vents. The area between the open window(s) and the Fantastic Vent supplies the maximum air flow and provides the most comfort.

NOTE: Do not leave the vent cover open while the motorhome is stored or unattended for extended periods of time. High winds other unusual conditions or obstructions may prevent closing. The resulting leakage could cause serious damage.

DOOR -SLIDING

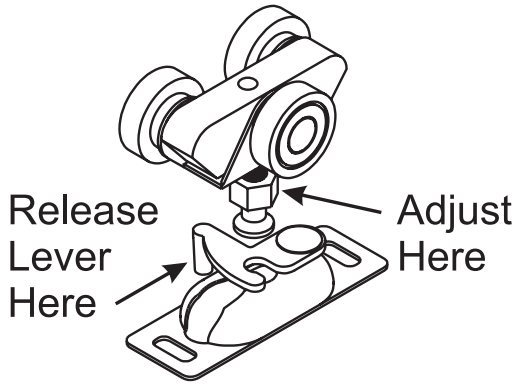

The sliding pocket door uses two rollers at the top of each door. During the life of the motorhome the sliding door may need adjusting. The sliding pocket door can be adjusted to close tight against the wall. Locate the small wrench and turn the adjusting screw upward or downward.

If for any reason the pocket door needs to be removed, locate the portion that is secured to the top of the pocket door and rotate the small lever outward to release the latches.

The pocket door rollers should be lubed with just a drip of oil once a year to help increase the life of the rollers and improve the sliding of the door.

AWNINGS
Patio Awning

To Unlock The Awning:

1. Loosen the black locking knobs.
2. Lift the arm storage locks located on each upper arm to the unlock position. Slide the brake control, located on the front arm only, to the full up (unlock) position.

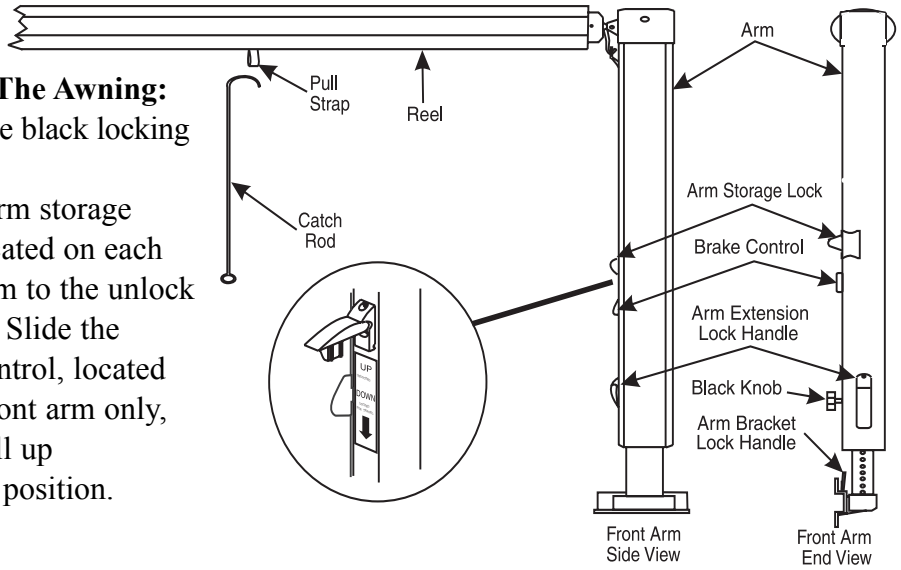

To Extend The Patio Awning:

1. Hook the loop of the center pull strap with the pull wand and draw the awning away from the motorhome to the desired extension. Slide the center pull strap to one end of the awning and store it.
2. Slide the inner rafters to the top of each arm and push outward to the tension canopy. Tighten the black locking knobs.
3. Raise the arm extension lock handles and slide the awning upward. Lower the lock handles and move the awning arm upward or downward to lock the detent into the hole. First, raise the lock handles on the main side. Next, raise the lock handles to the entry door. Go to the other awning arm and do the same. Make sure the awning is straight.

To Retract The Patio Awning:

Retract the arms and lower the awning until the arms rest on the lower stop bolts and lock into position. Loosen the two black locking knobs. Release the locking tab on the end of the awning leg. Slide the pull strap to the center of the awning while holding on to the strap. Allow the awning to roll up to the stored position.

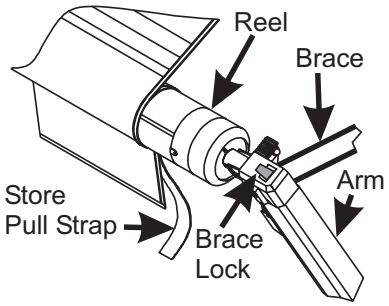

- Snap the arm storage locks into the down position and tighten the black locking knobs.
- Verify that the brake control is in the locked or closed position.

CAUTION: When the awning is at full extension do not allow the awning to snap back into the retracted position. Personal injury or damage to the awning or motorhome may occur.

Rain Release Setting:

After the awning has been extended, choose the rain release position to prevent water build up on the awning. To position the awning in the rain release setting, lower one arm of the awning and leave the other arm in the normal position. This will create enough of a slope for adequate water run off.

Rain Release Setting

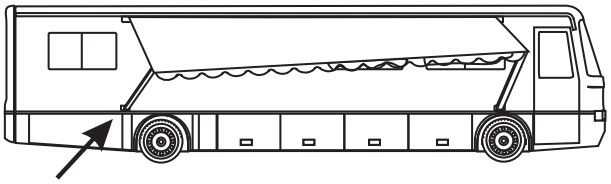

One arm should be set lower than the other for proper water run-off.

Using The Carport Feature:

To safely use the carport feature:

1. Extend the braces and lock them into the end of the side arms. Tighten the black knobs.
2. Extend the awning as described under “To Extend Awning.”
3. Unlatch the bottom of the rear arm by pushing in on the lock handle on the arm bracket. Swing the arm away from the motorhome to an upright position.
4. Raise the rear arm extension lock handle all the way up to the unlocked position. Extend the arm to position the awning at the desired height and lower the lock handle to lock the arms in place.
5. Drive the stakes through the bottom holes in the arm.
6. Repeat instructions 1 through 5 for the front arm extension lock handle.

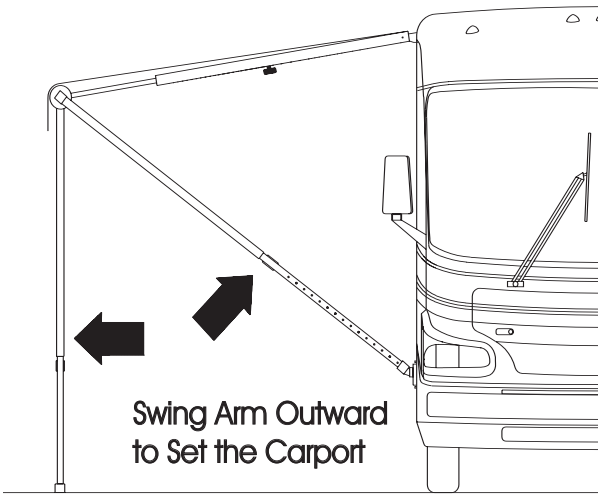

NOTE: To move the awning out of the carport position reverse the above steps.

Securing The Awning For Travel:

Before traveling, check the following:

1. The awning is fully retracted against the sides of the motorhome.
2. The black locking knobs are tightened.
3. The storage locks are down and in the locked position.
4. The brake control is in the full down (locked) position, and no red warning is showing.
5. The bottom of the front and rear arms are latched properly into the bottom brackets.
6. The catch rod is stored away.

Care and Maintenance:

Washing:

On a monthly basis, loosen hardened dirt and remove dust from the awning with a dry, medium bristle brush. Thoroughly rinse both the top and bottom with a hose. Wash both sides of the awning using a quality vinyl cleaner solution and an awning brush. (Washing the awning can be made easier with use of awning maintenance products.) Saturate the fabric with the cleaning solution and leave it on for 15-20 minutes. If necessary, reapply the solution to keep the fabric saturated. Rinse the awning thoroughly. Repeat, if necessary, until most of the stains disappear.

Water Leaks:

If leaking occurs after washing, it generally results from insufficient rinsing. If water drips through the needle holes in the stitching use a commercial seam sealer which is available in canvas and trailer supply stores. Paraffin wax may also be applied to the top of the seams. As the awning “weathers” these holes will normally seal themselves.

It is normal for slight leakage to occur through the fabric where water is allowed to accumulate or pocket on the fabric. See “Storm Precautions” for information on the awning settings for proper water drainage. Sometimes soap or chemical residue, such as from active agents in insect fog or sprays, can “wet” the fabric so that it appears unable to repel water.

Rinse the fabric thoroughly and test to see if it is water repellent after it dries. If leakage continues after repeating the washing and thoroughly rinsing, please contact Carefree Awning Magic concerning further maintenance.

Storm Precautions:

The warranty does not cover damage caused by acts of God; therefore, steps should be taken to prevent damage from occurring due to wind, rain or storms. If you are leaving or retiring for the night, close the awning. This takes only a few minutes, and it gives the best protection for the awning. If closing the awning is not possible at the time, lower both ends of it as far as possible to create a sufficient slope for water run-off. One end may be lowered to sufficiently divert the water, if the awning is being monitored.

Water weighs 8.33 pounds per gallon. The awning was not made to withstand the 500 to 700 pounds that could accumulate. It is best not to subject the awning and the motorhome to the needless strain.

NOTE: Allow the awning material to thoroughly dry before rolling the awning up. Metal surfaces should be cleaned with soapy water and thoroughly rinsed.

Awning - Automatic (Optional)

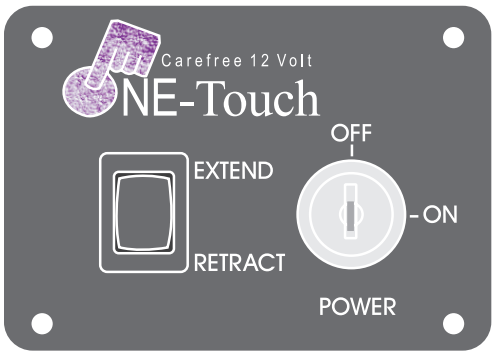

The Carefree One Touch automatic awning requires only "finger tip" operation. A key lock on the One Touch switch pad is provided to prevent accidental deployment of the awning while the motorhome is in motion. The key is removable in the lock or unlock position.

Gas filled struts keep the awning fabric tight at any extended position. The 12 Volt DC motor for the One Touch awning uses approximately 15 amps while in operation.

To Extend the Awning:

- Verify all persons and objects are clear from the extend path of the awning and related hardware.
- Turn the One Touch key to the ON position.
- Depress and hold the momentary switch to EXTEND. Motor will automatically stop at full extension.
- Allow 14 seconds for awning to reach full extension.
- Extension distance or fabric tension is adjusted by toggling between **RETRACT** and **EXTEND**.
- Turn the One Touch key to the OFF position.

CAUTION: The patio awning requires nine feet of lateral clearance from the side of the motorhome. This distance will allow the awning to reach full extension. The One Touch patio awning was not designed with a carport feature or a rain release setting. The awning should be retracted if the motorhome is left unattended or high wind conditions exist. Otherwise, wind damage to the awning may occur.

NOTE: It is not required to have the awning at full extension. Awning may be stopped at any time of extension or retraction by releasing the momentary switch.

To Retract the Awning:

- Verify all persons and objects are clear from the retract path of the awning and related hardware.
- Turn the One Touch key to the ON position.
- Depress and hold the momentary switch to RETRACT. The motor will automatically stop at full retraction.
- It takes approximately 14 seconds for the awning to travel from the fully extended position to the fully retracted position.
- Turn the One Touch key to the OFF position to avoid accidental deployment of the awning while the vehicle is in motion.

Tips:

If the awning fails to retract or extend:

- Verify the One Touch key is in the ON position.
- The house battery cut off switch is in the ON position.
- The house battery voltage is at 12 Volts or above.
- Verify proper electrical connection from the awning motor to the side of the motorhome.

Emergency Retract Procedure:

If the One Touch awning fails to retract and proper DC voltages have been verified, the One Touch awning has two emergency methods of alternately retracting the awning.

1. Two exposed electrical studs are mounted externally at the forward end of the awning at the motor assembly. An alternate 12 Volt DC positive and negative supply may be applied to these connections. If awning fails to move, reverse the polarity of the alternate supply leads.
2. On the motor assembly, mounted externally at the forward end of the awning, is an opening. Insert a 9/64” Allen hex wrench. Using an electric drill, wind the awning to the retract position.

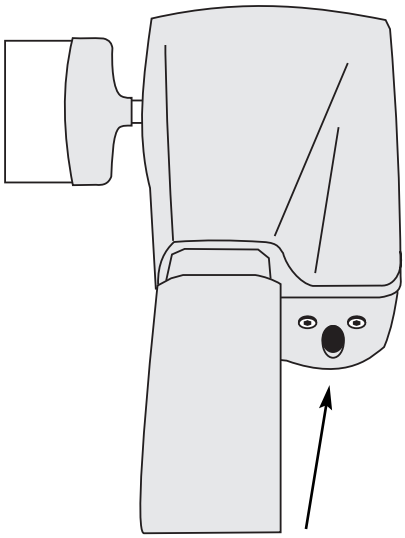

12 Volt Motor.

CAUTION: When using an alternate method to operate the awning use extreme care to keep appendages, hair or loose clothing away from exposed rotating hardware.

SOFA BED CONVERSION

The sofa will convert easily into a bed. The sofa comes equipped with safety belts and these should be used if occupied during travel.

Sofa to Sleeper

- Raise the sofa seat base until seat base and backrest form a V shape by lifting up from the center of sofa just below the seat cushions.
- Push down on seat base until the seat base and backrest are flat.
- Fold seat belts out of the way.

Sleeper to Sofa

- Lift the seat base up until seat and back rest are in a V shape.
- Push down on seat base.

DINETTE BED CONVERSION *(Optional)*

- The booth dinette easily converts into a bed.
- Lift seat cushions to an angled vertical position.
- With a firm grip, lift front edge of the table approximately six inches and push table leg lock to side.
- Swing the table leg up and lock into a horizontal position.
- Continue lifting table until table stays are clear of retainers. Pull outward and lower table down.
- Use both seat cushions and one back cushion for a mattress. Leave one back cushion in a vertical position.

WARNING: Do not occupy the booth dinette, if not equipped with safety belts, or the dining chairs while the motorhome is in motion. To avoid personal injury to occupants in case of a crash or sudden stop, chairs must be stored in an enclosed area or secured with tie down straps while the motorhome is in motion.

STORAGE - UNDER BED

To use the storage compartment located under the bed, locate and unlock the bed deck latches. Lift up the bed by the front edge of the mattress platform. Gas struts hold the mattress and platform open.

NOTE: Do not over stress gas struts by rapidly opening or closing the bed access cover, as this action can damage the struts or mounts. In extreme cold gas struts may not hold the mattress platform in the open position.

NOTES

AMBASSADOR

SECTION 6
WATER SYSTEMS

6

INTRODUCTION

This section contains information and knowledge for the operation and care of the various water system equipment found in the motorhome. The motorhome is equipped with two separate water systems. Optional water equipment will also be discussed, so not all information may be applicable to the motorhome. More detailed information with CAUTION or WARNING instructions for the various equipment, other than what is found in this section, can be found in the manufacturer's manual in the owner information box.

It is hard to imagine how much water you use everyday when you are at home. Newcomers to self-contained motorhomes soon discover that water does not last very long unless consumption is drastically reduced. For instance, you can use less water for showering if you wet down, turn off water while soaping, then turn on water to rinse. This way a good shower uses a gallon or less of water. There is plenty of water to meet personal needs once you modify some habits.

Fresh Water System:
The fresh water system consists of fresh water tank, water pump, gravity fill connection, water filter and a city/fresh water connection.

Waste Water System:
The waste water system consists of a waste holding tank (grey water), a sewage holding tank (black water), flush system, toilet and drains.

MONITOR PANEL
Measurement & Calibration

The motorhome is equipped with a monitor panel to aide in managing the storage tanks. The monitor panel will be located above the entry door or in the bathroom area. The switch marked **test** is a momentary switch which requires being held down while testing the level of the storage tanks. Read the scale for the desired storage tank which is to be monitored. Each scale uses colored lights along with a corresponding scale reading. The lights and scales indications are as follows:

- Green lamps indicate good or normal ranges.
- Amber lamps indicate fair or partial ranges.
- Red lamps indicate full or empty ranges (depending on the scale) which are in the critical range.

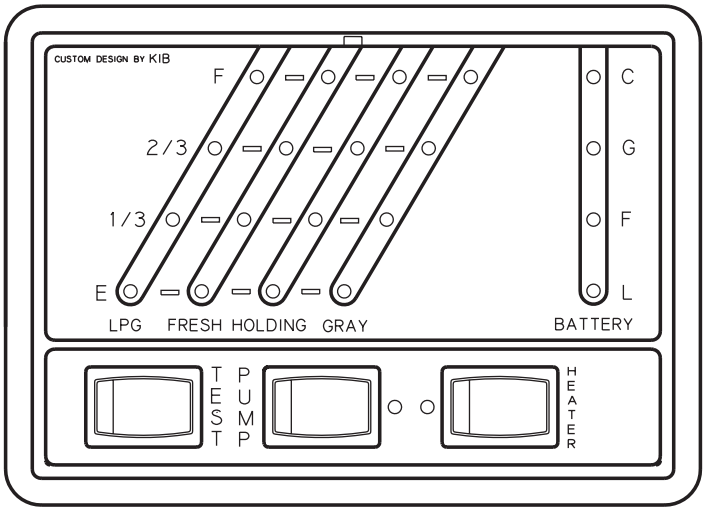

WATER TANK - FRESH WATER FILL

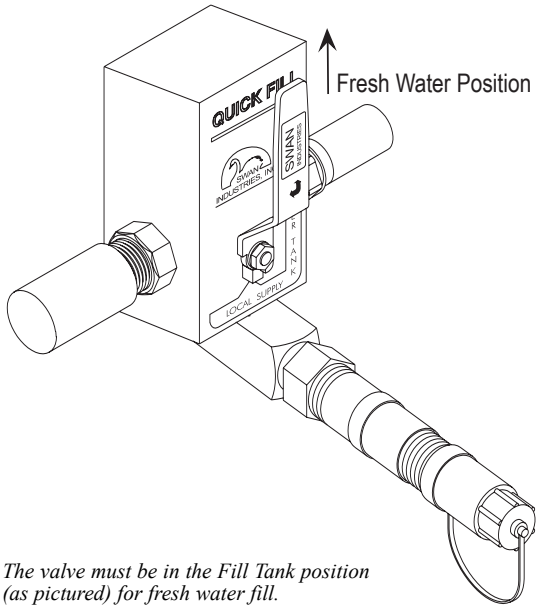

The valve must be in the Fill Tank position (as pictured) for fresh water fill.

1. Check to make sure the fresh water tank drain valve, located on roadside in the service center is in the closed position.
2. Connect the hose labeled for potable water to the water source. The water hose from the source to the motorhome sometimes will not have a pressure regulator inline. On a hot day the hose may expand and burst from water pressure within the water hose.
3. Remove white plug in the end of the pressure regulator.
4. Connect the water hose to the City water inlet.
5. The knife valve should be in the Fresh Water position.
6. Turn on the water at the water source. The water should be audible as the fresh water tank fills.
7. Locate the monitor panel. Locate the switch marked test. The switch is a momentary switch that requires the switch to be held in position while testing the level in the fresh water tank. Read the scale as the fresh water tank is filling. When the 2/3 tank light illuminates it should not take much longer to finish filling the tank. Do not leave coach unattended while filling the fresh water tank. The light marked “F” should start to blink as a warning that the fresh water tank is almost full. Return to the service center. When the fresh water tank is full water will come out an overflow tube under the coach on the driver’s side.
8. Turn off water supply as quick as possible.

WATER TANK - FRESH GRAVITY FILL

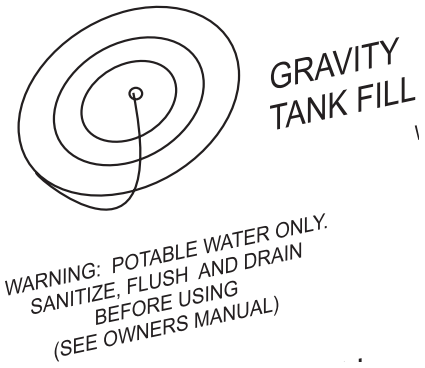

The gravity fill inlet allows fluids to be introduced directly into the fresh water tank. When dry camping water can be poured directly from a container into the fresh water tank. The gravity fill inlet can be used to pour disinfecting solution into the fresh water tank or when using potable RV antifreeze to winterize the fresh water system. Use only potable water sources, solutions and delivery systems when using the gravity fill inlet.

Filling the Tank:

1. Unscrew fill cap taking care to keep cap and inlet clean.
2. Insert potable water hose into inlet.
3. Fill tank until water overflows from inlet.

NOTE: When filling tank do not leave hose unattended.

WATER - CITY HOOK-UP

When connecting the motorhome to fresh water, be sure to use a hose manufactured and labeled for potable water to insure that the hose will not flavor the water.

1. Remove white plug in the end of the water inlet.
2. Connect water hose to the city water inlet.
3. Knife valve handle should be in the position shown in the picture.
4. Turn on water at water source.
5. The water pump can either be in the OFF position or in the ON position. It will not affect the water pump to leave it on.
6. The fresh water connection has a built in pressure regulator and a one way check valve that protects the motorhome to 45 lbs.
7. Open each faucet one at a time to rid any trapped air inside the pipes.

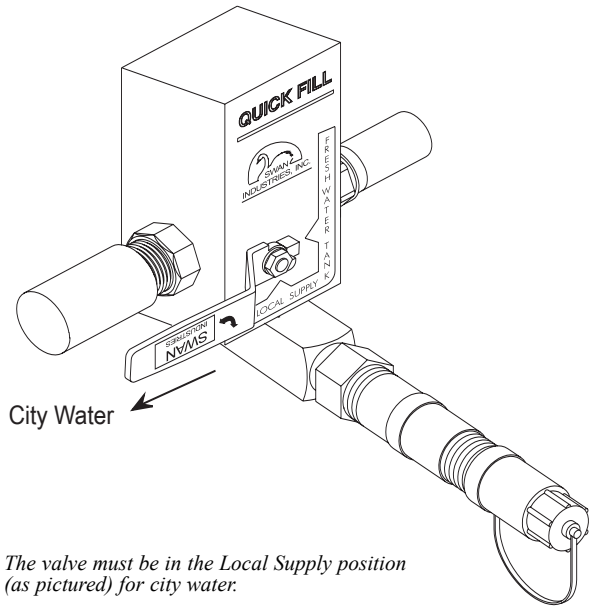

The valve must be in the Local Supply position (as pictured) for city water.

CAUTION: Some water sources develop high water pressure, particularly in mountainous regions. High water pressure is anything over 55 psi (pounds per square inch). Excessive water pressure may cause leaks in water lines and/or damage the water heater. The coach does come with a pressure regulator.

WATER PUMP

The water pump is used to pressurize the fresh water system when it is not connected to city water. The water pump is totally automatic and self- priming, operating on demand as water is used. The pressure equalizer tank relieves the water pump from cycling when a small amount of water is used. The water pump is located in a storage compartment of the motorhome.

WARNING: Before leaving the coach for extended periods of time (i.e. overnight or longer) be sure that the city water and all water pumps have been turned off. Damage from neglect will be responsibility of the owner and not Holiday Rambler.

To operate the water pump, push on switch and watch for the green light to stay on. The remote switches are located in the bathroom, on the control panel next to the entrance door and on the outside water control panel.

Do not allow the pump to run when the fresh water supply tank is empty. Continued operation with a dry tank may open an electrical circuit and/or damage the water pump.

To start pump after unhooking city water supply or first time use proceed as follows:

- Fill the fresh water tank.
- Open all valves and faucets except the drain valves. This includes hot and cold water valves, all faucets and shower.
- Turn the water pump on and wait for the water lines and the hot water tank to fill.
- Close each faucet when it delivers a steady stream of water (cold water faucets first).

Water Pump - Troubleshooting

Vibration induced by road conditions can cause the plumbing or pump hardware to loosen. Check for system components that are loose. Many symptoms can be resolved by simply tightening the hardware. Check the following items along with other particulars of the system.

The water pump will not start/blows the circuit:

- Check the electrical connections, fuse, breaker, main switch and ground connection.
- Is the motor hot? The thermal breaker may have triggered. It will reset when cool.
- Is the voltage present at the switch? Bypass the pressure switch.
- Does the pump operate?
- Check the charging system for correct voltage and check the pump for the proper ground connection.
- Look for an open or grounded circuit or motor.
- Check for seized or locked diaphragm assembly (water frozen).

The water pump will not prime/sputters (No discharge/motor runs):

- Is the strainer clogged with debris?
- Is there water in the tank, or has air collected in the hot water heater?
- Is the inlet tubing/plumbing sucking in air at plumbing connections (vacuum leak)?
- Check for proper voltage with the pump operating.
- Look for debris in the pump inlet/outlet valves or dry/swollen valves.
- Check the pump housing for cracks or loose drive assembly screws.

The water pump will not shut-off/runs when the faucet is closed:
- Check to see if the fresh water tank fill valve is completely closed.
- Check output side (pressure) plumbing for leaks and inspect for a leaky toilet or valves.
- Look for loose drive assembly or pump head screws.
- Are the valves or the internal check valve held open by debris or is the rubber swollen?

The water pump is noisy or rough in operation:
- Check for plumbing which may have vibrated loose.
- Does the mounting surface multiply noise (flexible)?
- Check for mounting feet that are loose or compressed too tight.
- Look for loose pump head to motor screws (three long screws).
- Is the motor with the pump head removed? Is noise coming from the motor or pump head?

The water pump is rapid cycling:
- Look for restrictive plumbing/flow restrictors in the faucets or shower heads.

WATER SYSTEM
- Troubleshooting

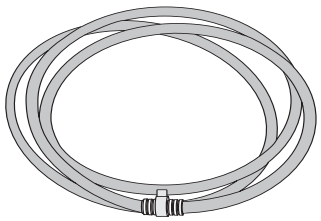

Water system problems and leaks usually fall into two categories: system problems and problems caused by improper use or lack of attention. These problems usually stem from improper winterizing, poor maintenance, road vibration and campsite water pressure variations.

Check all plumbing connections for leaks at least once a year. If the water pump runs when a faucet is not open, check for a water leak. Be sure the tank drain valves are closed. If the system continues to leak take the motorhome to an authorized dealer for service.

WATER SYSTEM
- Disinfecting Fresh Water

Disinfecting the water system with chlorine bleach (superchlorination) protects you and your family from bacteriological or viral contamination from any common water source.

You should disinfect the water system:
- If the motorhome is new.
- If the motorhome has not been used in a long time.
- Every **three** months.

NOTE: An independently operated water pump with garden hose connections and a container to hold prepared solution may be desired to perform this task. The gravity fill may also be used to perform the task. Remove cap off the gravity fill. Add the solution to the fresh water tank. When finished, secure the gravity feed cap.

Use following procedure to disinfect water system:

- Prepare a chlorine bleach solution using 1 gallon water and 1/4 cup of chlorine bleach. Use 1 gallon of solution for every 15 gallons of tank capacity. Example: Add 2-2/3 gallons solution to a 40 gallon tank. Add 4-2/3 gallons solution to a 70 gallon tank. Add 6-2/3 gallons to 100 gallon tank. This mixture puts a 50 ppm (parts per million) residual in the water system. This concentration will act as a quick-kill dosage for harmful bacteria, viruses and slime-forming organisms. Concentrations higher than 50 ppm may damage the water lines and/or tanks.

- Drain the fresh water tank. Close the drain and pump the solution (if desired) into the fresh water tank using an independently operated pump and a garden hose connected to City Water Hook-Up on the water control panel. It can be poured into the fresh tank using the gravity fill and a funnel. Open each faucet, in turn, and run the water until you smell a distinct chlorine bleach odor. Do not forget the hot water, tub and shower faucets.

- Allow the system to stand for four hours.

- Drain the system and flush with fresh water. The drain is located in the outside water control compartment. Flush with fresh water repeatedly, if necessary, until no chlorine bleach taste or smell is left in the water system.

TANK CAPACITIES - CHART

Tank Capacities (Approximate Gallons)

MODEL#	34Y	34H	36Z	36R
Water Heater	10 gal.	10 gal.	10 gal.	10 gal.
Grey Holding Tank	52 gal.	52 gal.	52 gal.	52 gal.
Black Holding Tank	52 gal.	52 gal.	52 gal.	52 gal.
Fresh Water Tank	80 gal.	80 gal.	80 gal.	80 gal.
LP-Gas Tank*	38 gal.	38 gal.	38 gal.	38 gal.
Fuel Tank	75 gal.	75 gal.	75 gal.	75 gal.

**Actual filled LP-Gas Tank Capacities is 80% of listing due to safety shut-off required on tank.*

WASTE WATER SYSTEM
- Waste Drains & Sewage Tanks

The waste drainage system is designed to provide adequate and safe storage and/or discharge of waste materials. All materials used in the fabrication and installation of the system are tested by a nationally recognized testing laboratory. The entire fabricated waste system is factory tested in accordance with American National Standards Code A119.2. The drainage system uses ABS plastic piping and fittings for its connection to the sinks, shower, toilet and holding tanks which provide for the proper drainage to an outside termination. The motorhome should be reasonably level for optimum operation of the systems. Two separate waste water systems are in the motorhome: one for waste water (grey water) and one for sewage waste (black water). Each has its own storage tank and control valve. Both systems empty through a sewer drain hose. When the motorhome is traveling, both holding tanks should be empty or less than half full.

What Not to Put in Waste Holding Tanks

- Do not use strong or full strength detergents to deodorize and disinfect. Use odor control chemicals made especially for holding tanks.
- Do not put automotive antifreeze, ammonia, alcohol or acetone in holding tanks. Some chemicals will dissolve plastic.
- Do not put large table scraps in the tanks. They could get stuck in or damage the valve seals.
- Do not flush facial tissues. They are treated chemically to strengthen them and will not dissolve like toilet paper. Special holding tank tissues are available at most RV supply stores. White toilet paper dissolves faster than colored papers.

Proper Waste Disposal

Most State Parks have strict regulations about discharging wastes except into authorized disposal systems. Dumping raw sewage from toilet holding tanks, except at authorized dumping stations, is universally prohibited. Illegal dumping along the roadside by a minority of recreational vehicle users has resulted in tough laws and has unfairly labeled all camping vehicle trailers as unwelcome in some areas.

Most National, State and private parks have either a central dump facility or campsite hook-up for sewage. Many of the modern rest areas along the interstate now have dump stations available. You will find a list of dumping stations from coast to coast in Woodall's Campground Directory, Trailer Life's RV Campgrounds and Services Directory, Rand McNally's Campground and Trailer Park Guide, Good Sam Park Director (Good Sam Club), and other publications. Some major oil companies offer dump facilities at selected stations. Plan ahead and you will find few inconveniences in proper and legal disposal of holding tank wastes.

Connecting to Available Sewer Hook-Up

When you park in an area with sewer hook up available the waste holding grey tank gate valve can remain open once you have connected to the sewer hook-up. The sewage holding black tank valve must be closed at all times except when dumping. One thing you may want to consider prior to dumping the holding tanks is to allow enough fluid to accumulate in the grey tank before dumping. Then you dump the black tank first so the grey tank fluid may be used to flush the sewer hose.

TOILET
Operating Instructions

The toilet operates from either fresh water tank or city water supply. The water pump must be turned on or the city water connected. The toilet flushes directly into a sewage holding tank (black water).

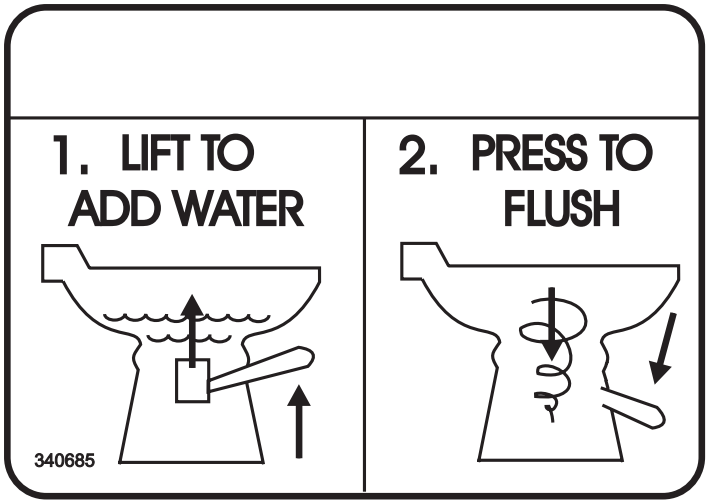

- To add water to the toilet before using, lift the flush lever until the desired water level is reached. Generally, more water is required only when flushing solids.
- To flush the toilet, push the lever all the way down until the sewage leaves the toilet. The water flow pressures vary at different locations; therefore, holding the flush lever down for five to eight seconds may be required. We recommend 2-gpm flow for proper rim and bowl wash.
- To operate the remote mounted hose sprayer, push down the lever and hold it. Release the flush lever by allowing it to snap back, which permits positive sealing around the flush ball. A small amount of water should remain in bowl.

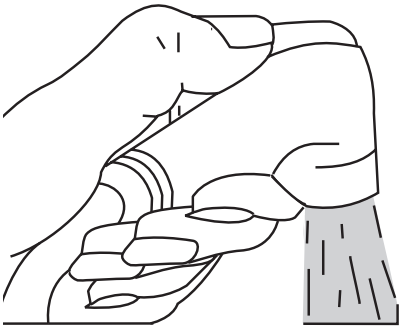

NOTE: Holding flush lever down longer than necessary results in excessive water usage.

Cleaning

The toilet should be cleaned regularly for maximum sanitation and operational efficiency. Clean the toilet bowl with a mild bathroom cleaner. Do not use chlorine or caustic chemicals, such as drain opening types, as they will damage the seals.

Clean out the system by flushing several gallons of fresh water through with one cup of dry laundry detergent. Add odor control deodorant, in the amount specified for the holding tank capacity, after cleaning and every few days during use.

Maintenance

To find leaks, check behind or under toilet. Take four or five sheets of toilet tissue and wipe all the seams and waterline connections. Start at the top of the unit and work downward. When the tissue comes in contact with leaking water it will immediately change texture.

Drain Traps & Auto Vents

Sinks, shower and clothes washer drains incorporate a water trap or “P-trap” and auto vents to prevent waste water holding tank odor from entering the motorhome. These P-traps for the most part are usually within 54” of a vent tee. These traps must have water in them to block odors. During storage water can evaporate and allow odor into motorhome. If odor is detected run water into sinks, shower and clothes washer to fill drain traps. The auto vent by design is to assist in the flow of water in the drain lines. They enable a smooth flow water in the drain without creating vacuum pressure in the lines.

The auto vent, if stuck in the open position, can allow grey odors to enter the motorhome. These auto vents also double as “clean outs” in the event you have to snake out a line.

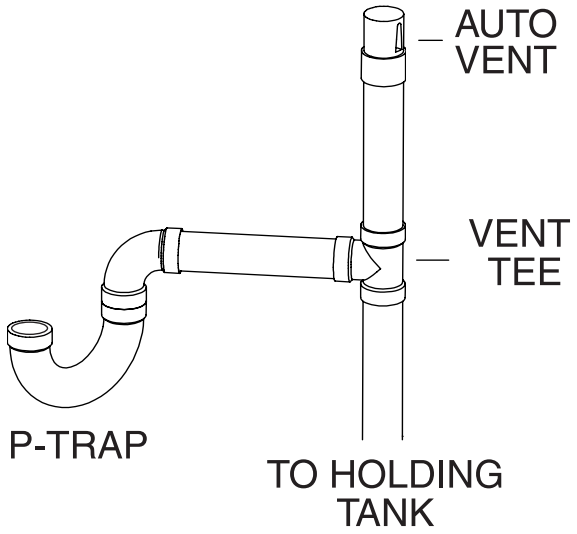

NOTE: Most chemical mixtures for holding tank odor control are poisonous. Follow the product manufacturer's directions and warnings when using any holding tank additive.

Draining the Waste Holding Tanks

When parked in an area with a sewer hook up, “exercise” the drain pipe before hooking up the sewer hose. Swivel the pipe up and down by firmly grasping both sides of the sewer drain pipe hose connection. This will exercise the O-rings. Leave the drain pipe pointing up to prevent any residual material from running out.

Attaching the Sewer Hose:

- Turn the drain end cap counterclockwise and remove it from the drain pipe.
- Unscrew the hose access deck plate from the bottom of the water service compartment. Feed the adapter end of the drain hose up through the hole and install the hose adapter onto the drain pipe.
- Rotate the drain pipe downward for maximum flow.
- Straighten and secure hose to avoid recoil. Attach the end of the hose to the sewer connection at the dump station.

NOTE: Ensure sewer hose connections and hose clamps are secure before use.

The grey water holding tank valve (small valve) remains open when connected to the sewer hook-up. The black water holding tank valve (large valve) remains closed at all times except when dumping the sewage tank. When preparing to dump the black water holding tank, first close the grey water tank valve. Allow the grey water tank fluid to accumulate until the tank is at least half full or fill by running cold water through the sink and shower drains. Do not overfill the grey water holding tank.

To aid in the removal of solids, it is best to dump the black tank when it is at least 50% full. If it is necessary to dump the black tank when the level is below 50% add water by using the sewage tank flush system until a 50% ratio is achieved.

- With the black valve closed use the sewage tank flush system to increase the holding tank level.
- Use the monitor panel to prevent the tank from being overfilled when adding water using the sewage tank flush system, closely watch the tank level by observing the appropriate tank gauge.
- The sewage tank flush system should never be operated while unattended.

Dumping the Waste Holding Tanks:

- With the grey water valve closed, open the black water valve to drain the tank.
- Flush the sewage tank. Connect a separate non-potable water supply hose with pressure regulator to the sewage tank flush connection on the water service panel. For sanitary reasons, be sure not use the potable city water hose for this procedure. The large gate valve remains open throughout the flushing cycle. Turn the water on and flush the black water system for approximately two minutes. Ensure water is flowing freely through the sewer hose.
- When finished flushing the system, turn the water off and close the black water valve.
- Open the grey water valve.

- The waste water tank is flushed by running two gallons of water down a sink drain.
- If applicable, close the grey water valve for transit.
- Disconnect and flush the drain hose with either the non-potable water supply hose or the exterior faucet. Secure the sewer hose in the travel location. Disconnect and stow the non-potable hose.
- Install the end cap (required by law in some states) and deck plate when in transit to prevent leakage. Swivel sewer drain pipe up.

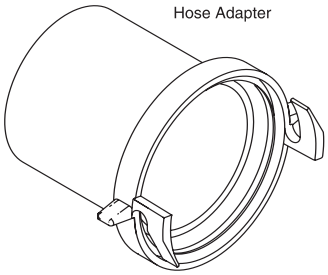

NOTE: Periodically lubricate the O-ring on the sewer hose adapter with silicone spray. Use care when connecting the hose adapter to the drain pipe in cold weather.

WARNING: When using the black tank flush do not leave the motorhome unattended or flooding may occur. The sewage tank flush system should be used each time the black water holding tank is dumped. Failure to routinely use the sewage flush system will result in a clogged spray nozzle. Turn off the water supply to the black tank flush when finished.

What to Put into the Holding Tanks - Black Tank

The sewage tank stores toilet drain waste only. Before using the toilet you need to treat the sewage holding tank with water that is mixed with an odor controlling chemical. These chemicals are readily available at any recreational vehicle supply store.

The chemicals are poured into the holding tank through the toilet. Mix the chemicals with approximately one gallon of water. Be careful not to spill the chemical on hands, clothing or carpet as it can cause permanent stain.

Extremely hot weather areas may require adjusted amounts of chemical to help with odor control. Each time the holding tank is dumped repeat the chemical mixing.

CAUTION: Do not use any products that contain petroleum or ammonia in place of an RV odor controlling chemical. Petroleum and ammonia will damage the ABS plastic holding tanks and seals.

What to Put into the Holding Tanks - Grey Tank

The waste tank stores sinks, shower and clothes washer drain water. No chemical is required in this holding tank; however, keep in mind this is a waste holding tank and can produce odors. A reduced mixture of chemicals may be used for odor control.

Prior to dumping the waste holding tanks, be sure there is enough liquid in the holding tanks to provide a smooth flow through the valve drain pipe and drain hose. When sufficient liquid is in the tank a swirling action will result that should take accumulated solid wastes along with the waste liquid when the tank is dumped. The tanks should be emptied when they reach ½ full, or weekly, to prevent stagnation and overfilling.

COLD WEATHER USE

A motorhome is not designed for extended use in below freezing (32° F/0° C) weather; however, problems may not occur as long as the temperature does not drop too low. Interior water lines, fixtures, water storage tanks and pumps are normally protected from moderate freezing temperatures as long as the furnace is operating. Exposed drains may freeze quickly. If in doubt about what temperatures the motorhome will tolerate, winterize with a potable antifreeze. The exterior water control bay has a 12 Volt electric heater to warm the bay during cold weather. The heater should be turned on when the ambient temperature approaches 44° F.

Storage:

If the motorhome is stored where freezing temperatures may occur, drain the domestic fresh water loop completely of water. When draining the domestic fresh water system start off by draining the fresh water tank by opening the point drain lever for the fresh tank and allowing the water to drain.

NOTE: Ice makers, water filters, water purifiers and water heaters all use domestic water and should be drained and stored in accordance with the manufacturer's recommendation for winterization.

The method chosen to winterize the motorhome and water lines is up to the motorhome owner. The lines can be air blown to remove standing water or the lines can be filled with an approved FDA RV antifreeze. Either way, all interior and exterior faucets need to be opened and closed, one at a time, to be checked. All low point drains should be opened and the holding tanks emptied.

Bay Heater Operation

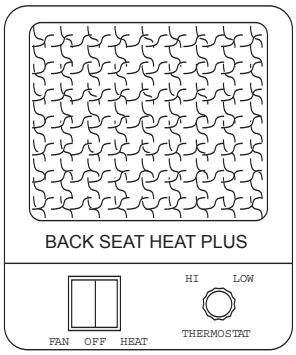

The heater is controlled using two switches. One switch is located on the heater itself and one, a remote "SYSTEMS HEAT" switch, is located in an inside overhead compartment next to the entrance door. Both switches must be in **ON** position for the heater to operate. Either switch, turned in the **OFF** position, will turn the heater off.

Heater Controls:

1. Function Select Switch:
   - Left Position - Fan only ON.
   - Middle Position - Heater OFF.
   - Right Position - Both fan and heater ON.
2. Thermostat:
   - Rotate right or clockwise to increase temperature setting.
   - Rotate left or counterclockwise to reduce temperature setting.

NOTE: When the bay heat remote switch is activated, the bay heater will begin operation at approximately 40º F. The remote switch will illuminate only while the heater is operating. Current draw is approximately 25 amps. Be sure the motorhome is plugged into shore power to prevent house battery discharge.

Cold Weather Package (Optional)

The cold weather package consists of one 12 Volt electric heating pad attached to each holding tank. Heating pads are turned on and off using the same "SYSTEMS HEAT" switch, located in an inside overhead compartment next to entrance door, that turns on the bay heater.

The Tank Heater is a total contact heater. A large surface area on the holding tanks is heated so it will be protected from freezing. The heater will replace the heat that is lost from the tanks when the outside temperature decreases. As the outside temperature decreases, the liquid and solid waste in the holding tanks will lose heat and start to freeze. When the waste and liquid freeze, the drainage system will be blocked and the holding tanks can not be dumped. The problem is eliminated with the tank heater. Holding tank heaters by design will prevent the contents from freezing in below freezing temperatures. The tank heater is thermostatically controlled, automatically turning "ON" at 44° F and turning "OFF" at 64° F. Power to pads should be turned ON when the ambient temperature approach 44° F. There must be liquid in the holding tanks when the pads are turned on.

Specification of the Tank Heater:

The tank heater requires 13.6 Volts DC with 5.9 amps input power. The output will be 80.7 watts with 275.8 BTU's. The area of the tank that is heated is 156 sq. in.

CAUTION: Turn OFF power to pads when dumping the holding tanks, plugging motorhome into shore power and when starting the electric generator to prevent damage to the pad thermostat.

WINTERIZING - Using Air Pressure

To use air pressure to winterize the motorhome you will need access to an air compressor and an adapter to connect the air line to the water system. Adapters can be found at any RV supply store. When hooked to the water lines the pressure should not exceed 40 psi. Higher pressure can damage the lines.

1. Remove the water filter elements from the filters and reassemble the filters without the elements (see “Water Filter”).
2. Drain the fresh water tank by opening the valve located in the outside water control service compartment of the motorhome.
3. Open the water heater and the low-point drains. Turn knobs to open the drains. Open the low point drains to clear the water out of the hot and cold water lines. Leave the low-point valves open until the motorhome is used again.
4. Let all the water drain. Turn the pump on and allow it to run so that all the water is cleared out of the pump and lines. Turn the pump off.
5. After the water lines are drained, hook an air hose to the city water connection located on the water control panel in the outside service compartment. Blow out the water lines until no further water can be seen coming out of the drain lines. Do not exceed 40 psi in the water lines and faucets.

6. Open all faucets (including the outside spigot), one at a time while the air is on, to clear water from the faucet supply lines. Do not forget to drain the shower.
7. While the air is on, hold the spray nozzle (located right next to the toilet) open until the water has quit running. Hold the toilet flush pedal or handle down until the water has stopped running.
8. Unhook the air hose and close the city water connection.
9. You will need 1 gallon of RV antifreeze to protect various water drain lines in the motorhome. Pour 1 pint into both the kitchen and bath shower drains. Pour 2 pints into the bath sink drain, with some of the antifreeze going into grey tank to protect the drain valve. While holding down the flush pedal, pour another 3½ pints into the toilet, letting the antifreeze run into the black tank to protect the valve located there. Pour the last pint of antifreeze into the toilet after you have released the flush pedal. Use a soft cloth to wipe out the sinks and shower after you pour in the antifreeze to protect the surfaces from stains.
10. Leave the low-point drains open until the motorhome is used again.

WARNING: When draining the low water drain lines and the water heater be sure the water is not hot. Hot water from the lines can burn or injure skin.

WINTERIZING - *Fresh Water System Using Nontoxic Antifreeze*

Ten gallons of FDA RV winterizing antifreeze is needed if the water lines are to be filled with antifreeze.

1. Open all low point drains and drain valves to drain the fresh water tank, water heater tank, holding tanks and fresh water lines.
2. Close all faucets, drain valves and low point drains.
3. Pour the antifreeze into the fresh water tank using the gravity feed opening.
4. Turn ON the system water pump and operate each faucet individually until a small amount of antifreeze is present.
5. Close off the faucets.
6. Open the shower faucets and toilet valves to allow a small amount of antifreeze to run into the holding tanks.
7. Use a soft cloth to wipe out the sinks and shower to protect surfaces from antifreeze stains.
8. Exterior faucet should be opened and closed using the same procedures as the interior faucets.
9. If the motorhome is equipped with an ice maker, remove the ¾ inch fitting and flush antifreeze through the water line.
10. Disconnect the power supply line affecting water pump operation.
11. Drain the water heater by removing the anode.

De-winterization:

For de-winterization, drain off the fresh tank and fill the fresh tank with water. Reconnect the power supply line for the water pump. Operate all faucets, one at a time, until clear water is present.

WARNING: You should use only non-toxic RV antifreeze that is specifically made for potable water systems. Automotive antifreeze, if ingested, can cause blindness, deafness or death.

WARNING: It is recommended that this procedure be done by a qualified RV service technician familiar with motorhomes, such as the authorized selling dealer.

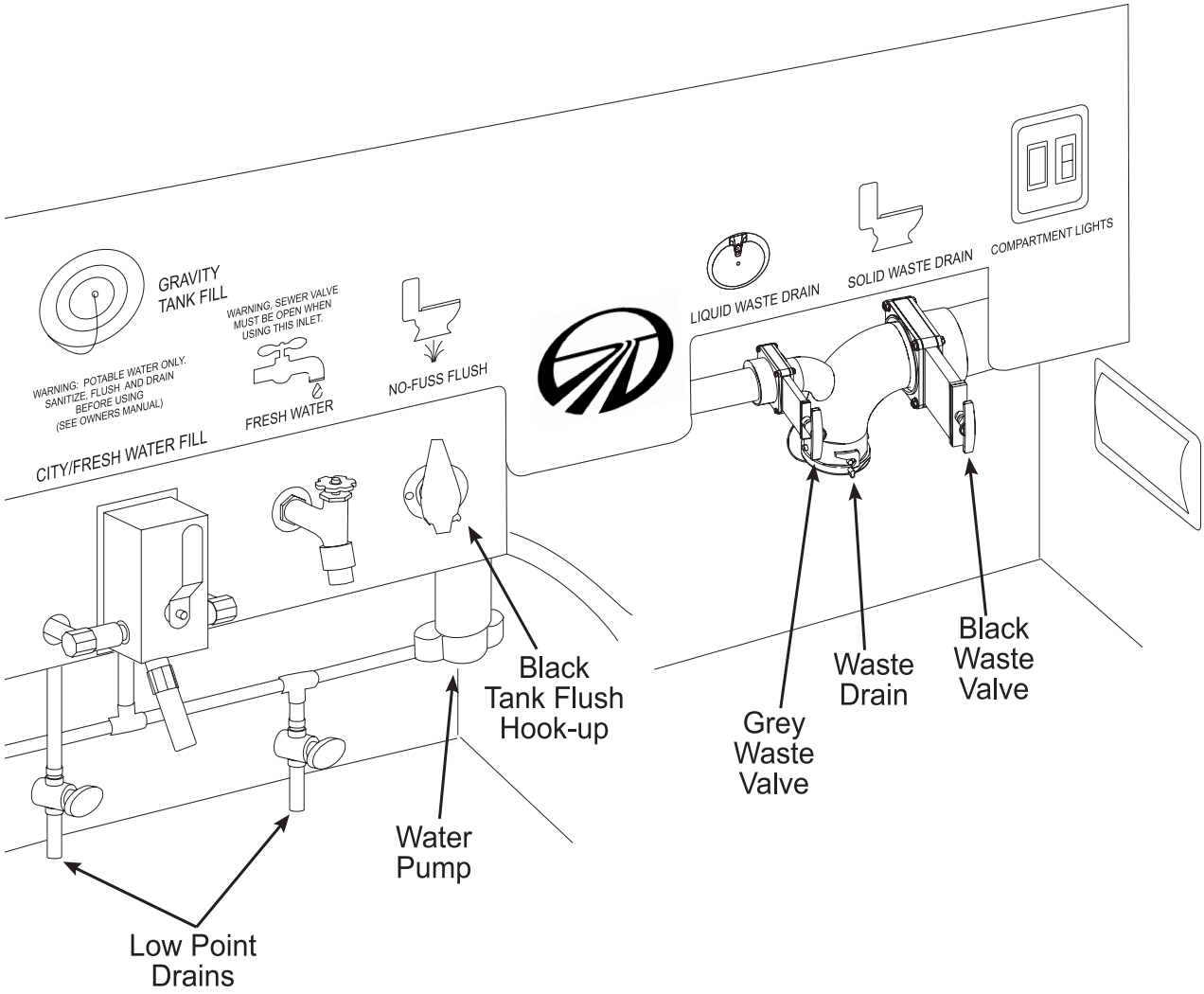

Service Center view.

NOTES

SECTION 7
LP-GAS SYSTEMS

7

LP-GAS SYSTEM

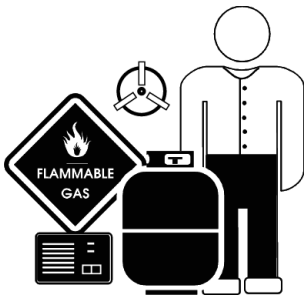

This section contains information and knowledge for the operation and care of the various Liquefied Petroleum (LP-Gas) system equipment found in the motorhome. The motorhome is equipped with several appliances and various equipment which are capable to operate on LP-Gas. Some items discussed may not be applicable to all motorhomes. More detailed information with **CAUTION** or **WARNING** instructions for the various equipment, other than what is found in this section, can be found in the manufacturer's manual in the owner's information box.

All components for the motorhome LP-Gas systems are approved for use in camping vehicles by a nationally recognized testing laboratory. When properly handled, LP-Gas is a clean-burning dependable fuel for heat producing components. The LP-Gas tank mounted in the motorhome contains liquid petroleum gas which is under high pressure. As the fuel is used, liquid gas vaporizes and passes through the tank valve to a regulator that automatically reduces pressure. Low-pressure gas is then distributed to components through a pipe manifold system.

Component lighting problems are commonly caused by an improperly adjusted gas regulator. Do not attempt to reset the regulator. Adjustments need to be made by a dealer or an authorized service person.

In higher elevations or extreme cold weather (10° F/-21° C or lower) a shortage of LP-Gas may be experienced. Usage can be modified by running only one component at a time. For example, turn off the furnace while using the range. If LP-Gas is going to be used in higher elevations or cold climates for a long period of time, have an authorized service person adjust the LP-Gas regulator for these conditions.

Have the LP-Gas system checked by an authorized dealer at least once a year, and thereafter before every extended trip. Although the manufacturer and the dealer test the system carefully for leakage, travel vibrations can loosen fittings.

Leaks can be easily found by applying a leak detector solution on all connections. If a leak detector solution is not available, a soapy water solution made with dish soap can be used. Rinse fittings thoroughly with clean water after use of the soap solution. Leaks can usually be repaired by tightening the fittings. If not, shut off the main gas valve at the tank. Immediately see a authorized dealer for repairs. Hand tighten the tank valves only. Do not use a wrench or pliers as over tightening may damage valve seats and cause leaks. If a leak is suspected (which can be easily identified by the odor of rotten eggs or sulfur) never light a match, have an open flame or use any spark producing equipment or appliance.

WARNING: LP-Gas is highly volatile and extremely explosive. Do not use matches or a flame to test for leaks. Use only approved LP-Gas leak testing solution for leak detection. Unapproved solutions can damage copper tubing and brass fittings. Never attempt to adjust LP-Gas regulators. Only qualified personnel should perform any maintenance or repair to the LP-Gas system.

LP-GAS DETECTOR

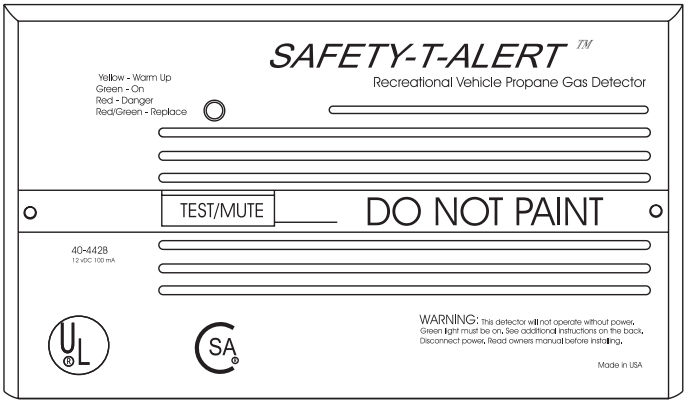

LP-Gas Detector

The LP-Gas detector is provided for safety. The gas detector detects both LP-Gas and Methane Gas. Liquefied Petroleum Gas (LP-Gas) is heavier than air and Methane Gas is lighter than air. LP-Gas will settle to the lowest point (generally the floor) of the motorhome. Methane Gas will rise. The LP-Gas detector is also sensitive to fumes such as hairspray, most of which contain butane as a propellant. Butane, like propane, is heavier than air and will settle to the floor level where it will be detected. When a inexact detection occurs, press the reset button to stop alert sound for 60 seconds in order to clear the air.

The other detectable vapors include alcohol, liquor, deodorants, colognes, perfumes, wine, adhesives, lacquer, kerosene, gasoline, glues, most of all cleaning agents and propellant of aerosol cans. Most are lighter than air in their vapor state and will only be detected when the motorhome is closed up.

Operation

Upon first application of power the LED will flash **yellow** for three minutes while the detector is stabilizing. At the end of the start cycle the LED will turn **green** indicating full operation. If detector senses unsafe levels of gas it will immediately sound an alarm. The gas detector operates on 12 Volts, with a current draw less than 1/10th of one amp.

CAUTION: This detector will not alarm during the three minute warm up cycle.

Testing

Press the **TEST** switch any time during the warm up cycle or while in normal operation. The LED should flash **red** and the alarm should sound. Release the switch. This is the only way you should test the detector. The test feature checks full operation of the detector.

WARNING: Test the operation of this detector after the motorhome has been in storage, before each trip and at least once per week during use.

Alarm

The **red** LED will flash and the alarm will sound whenever a dangerous level of propane or methane gas is detected. The detector will continue to alarm until the gas clears or the **MUTE** switch is pressed.

Procedures to Take During an Alarm:

1. Turn off all gas appliances (stove, heaters, furnace). Extinguish all flames and smoking material. Evacuate the motorhome, leaving all doors and windows open.
2. Turn off the propane tank valve.
3. Determine and repair the source of the leak. Contact a qualified service professional if additional repairs are necessary or if the source of the leak cannot be determined.

WARNING: If the alarm sounds and there is no immediate danger open all doors and windows to air out the motorhome. Exit the motorhome and turn off the gas at the LP tank. Do Not re-enter the motorhome until the alarm stops sounding. If the alarm sounds again after the gas is turned back on, turn the gas off. Leave the gas off and contact a qualified service technician to find and repair the leak. Do not re-enter the motorhome until the problem is corrected.

Alarm Mute:

Press the **TEST-MUTE** button when the detector is in alarm.

1. The **red** LED will continue flash and the alarm will beep every 30 seconds until the concentration of LP-Gas has dispersed to a safe level.
2. The LED will flash **green** until the end of the MUTE cycle.
3. If dangerous gas levels return before the end of the MUTE cycle the alarm will beep four times and return to phase 1.
4. After two minutes the detector will return to normal operation (**solid green**) or resound the alarm if dangerous levels of gas remain.

Fault Alarm:

Should the microprocessor sense a fault in the gas detector, a fault alarm will sound twice every 15 seconds. The LED will alternately flash **red** to **green** and the **MUTE** switch will not respond to any command. The gas detector must be repaired or replaced.

Care of the Detector

1. Vacuum the dust off the detector cover weekly (more frequently in dusty locations) using the soft brush attachment of the vacuum.

2. Do not spray cleaning agents or waxes directly onto the front panel. This action may damage the sensor, cause an alarm or cause a detector malfunction.

CHECKLIST - LP-GAS EMERGENCY PROCEDURES

If you smell gas (a rotten egg or sulfur smell) at any time, perform the following steps immediately:

- Shut off gas appliances.
- Manually turn off the main gas supply at the tank.
- Do not attempt to operate any electric switch.
- Open windows and doors.
- Evacuate the motorhome. Stay clear of the immediate surrounding area.
- Keep open flames, spark producing devices and smoking material out of the area.
- Contact a qualified service technician to find the source and repair the gas leak.

WARNING: A fire or explosion from ignited gas or gas fumes can seriously injure you or cause death.

LP-GAS TANK - *Operation*

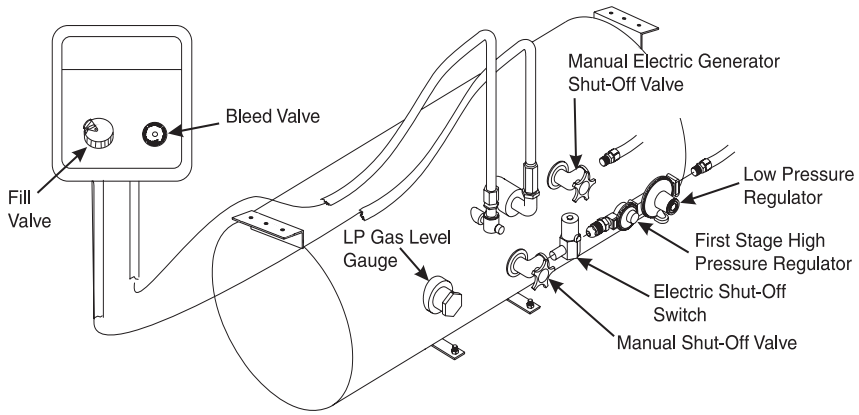

- Manually open the main shut-off valve located on the roadside of the LP-Gas tank.
- Turn off the manual valve on the LP-Gas tank when the motorhome is in between trips.
- Hand tighten the manual valve. Do not use a wrench or pliers to close the valve.
- The manual valve is designed to be closed by hand, over tightening may permanently damage the valve seat.

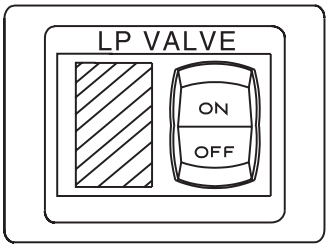

Outside Electric Switch

There is an LP -Gas electric shutoff switch located in LP tank compartment on curbside of motorhome for use during trips. When switch is ON red indicator light will be lit.

LP-Gas Tank Filling

Woodall's Campground and Trailer Guide and other publications list refueling stations. Many travel parks sell LP-Gas. Shut off the pilot lights, appliances and igniters before filling the LP-Gas tank to prevent a fire or explosion. Have a trained service person fill the LP-Gas tank.

The LP-Gas tank fill is located in the LP-Gas tank access outside compartment. Caution the service technician, if the tank is new and being filled for the first time, to purge any air from the tank before filling. When the tank is filled to the proper level there is space available for the conversion of liquid into gas. If a tank is over-filled it may vent pressure. When this happens you may detect a strong rotten egg odor near the tank and/or hear a hissing noise.

WARNING: Turn off all pilot lights and appliances while filling the LP-Gas tank to prevent a fire or explosion.

LP-Gas exists in both the liquid and vapor state with the LP-Gas tank. A "Full" tank is approximately 80% liquid. The pressure inside the tank varies with the temperature of the liquid. All tanks are required to be equipped with a pressure relief device. The purpose of the relief valve is to release gas or liquid caused by overpressurization. The gauge at the tank, when full, will only read 3/4. The monitor panel is adjusted to indicate **FULL** at this point.

If you are storing portable LP-Gas tanks (do not transport or store LP-Gas tanks, gasoline or other flammable liquids inside the motorhome) that are not connected to an LP-Gas system install an approved plug in the tank outlet holes to prevent leaks.

WARNING: Do not store or transport empty LP-Gas tanks, portable tanks, gasoline or other flammable liquids inside the motorhome. Keep open flame and spark producing materials away from the LP-Gas area. Shut off all appliances and LP-Gas tank valves (located on side of LP-Gas tank underneath the motorhome) when the motorhome is in storage. If this warning is ignored a fire or explosion could result.

CAUTION: Pressure inside LP-Gas tanks can reach over 300 psi when exposed to direct sunlight. A high pressure safety relief valve will purge excess high pressure if necessary. LP-Gas will stop vaporizing as the LP-Gas tank temperature approaches -40º F. Appliances which consume large amounts of LP-Gas, such as the water heater or furnace, will need to be operated in sequence in extremely cold environments.

LP-Gas Fundamentals

# Capacity	Gallon Capacity	BTU Capacity
5	1.18	107,903
10	2.36	215,807
11	2.59	237,387
20	4.72	431,613
30	7.08	647,420
40	9.43	863,226

CONVERSIONS

Gallons to Liters (1 Gallon = 3.785 Liters)
Fahrenheit to Celsius (F° - 32 ÷ 1.8 = C°)
11 in. Water Column = 6 1/4 ozs. per sq. in. pressure.
27.7 in. Water Column = 1 pound per sq. in. pressure.

The above capacities allow for 20% vapor space on each cylinder.
**Data taken from the National Fire Prevention Association (NFPA). Pamphlet #58-1998.*

Basic Facts About LP-Gas:

Pounds Per Gallon	4.24
Specific Gravity of Gas	1.50
Specific Gravity of Liquid	.504
Cubic Feet Gas Per Gallon of Liquid	36.38
Cubic Feet Gas Per Pound	8.66
BTU Per Gallon	91,502
BTU Per Pound	21,548
Dew Point in Degrees Fahrenheit	- 44° F
Vapor Pressure at 0° F	31
Vapor Pressure at 70° F	127
Vapor Pressure at 100° F	196
Vapor Pressure at 110° F	230
Flash Point	842° F

NOTE: The above information is not a complete guide for the use of LP-Gas tanks or appliances. In cold climates keep fuel levels above 50% in order to keep vaporization of LP-Gas at the highest level.

Tank Capacity

MODEL #	34Y	34H	36Z	36R
LP-Gas Tank	38 gal.	38 gal.	38 gal.	38 gal.

**Actual filled LP-Gas Tank Capacities is 80% of listing due to safety shut-off required on tank.*

LP-GAS REGULATOR

The regulator is the heart of an LP-Gas system. The LP-Gas in the tank is under high pressure. The regulator reduces the pressure of gas so that it is safe to use with various appliances. The regulator on the motorhome is a two-stage regulator. The first stage regulator reduces the full tank pressure down to a range of 10-13 psig (pounds per square inch gauge). The second stage further reduces the pressure down to an outlet pressure of 0.4 psig (11 inches of water column). The regulator is equipped with a vent that allows it to breathe. If the pressure in the LP tank is too high the regulator will allow gas to escape through the vent until pressure returns to a normal range. It is important to keep the vent clean and clear of obstructions or corrosion. If the vent becomes clogged, pressure from LP tank could cause a failure of the components. If there is any corrosion, contact a qualified LP-Gas service technician. The regulator is mounted so that the vent faces downward. If the vent becomes clogged clean it with a toothbrush.

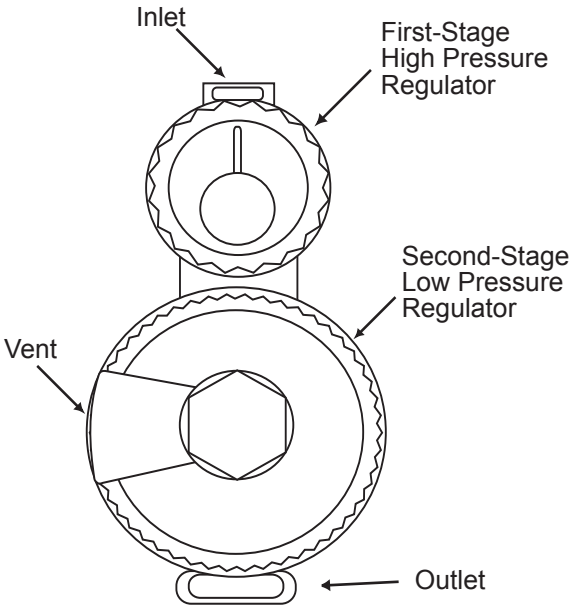

LP-Gas Regulator

Under normal atmospheric conditions an LP regulator will not freeze, nor will the LP-Gas. The gas passing through the regulator will expand and cool creating moisture in the gas. This moisture will turn to ice which can build up and partially or totally block the orifice. The possibilities of freeze up is greatly reduced with the two stage regulator.

To prevent freeze up:

1. Ensure the LP tank is totally free of moisture prior to filling.
2. Ensure the tank is not overfilled.
3. Keep the valve closed when the tank is empty.
4. If a freeze up occurs, have an LP-Gas distributor purge the tank.
5. Have the LP-Gas distributor inject methyl alcohol in the tank.

WARNING: Do not attempt to adjust the regulator, it is preset at the factory. If adjustments need to be made it requires special equipment. Failure to follow these instructions may result in a fire or explosion and cause severe personal injury or death. Do not attempt to enter the motorhome until the problem has been corrected!

LP-GAS CONSUMPTION

Each gallon of LP-Gas produces 91,502 BTU's of heat. One 27 gallon tank produces two million BTU's. Total consumption depends on the rate of usage by each appliance and the operating time. The stove and heating systems typically use the most gas. With sub-freezing temperatures and high winds, consumption by the furnace can be very high. Check the tank level often in cold weather.

WARNING: LP-Gas is highly volatile and extremely explosive. Never use matches or open flame to test for leaks. Use only approved LP-Gas leak testing solution to test for leaks. Unapproved solutions can damage copper tubing and brass fittings. Never attempt to adjust LP-Gas regulators without the use of proper equipment. Improper LP-Gas regulator adjustment will affect the performance of LP-Gas operated appliances. Incorrect flame or explosion can occur. Only qualified personnel should perform any maintenance or repair to the LP-Gas system.

LP-GAS DISTRIBUTION LINES

A primary manifold black steel pipe running throughout the motorhome distributes LP-Gas to secondary lines. All secondary lines leading to gas appliances are made of copper tubing with flared fittings. If any lines rupture do not attempt to splice them. Always run a new line. We recommend gas distribution work be performed by an authorized dealer or an authorized service technician. When removing or servicing any gas appliance, manually close the main valve located on the side of the LP-Gas tank. This will prevent dangerous gas leakage that could result in an explosion and possible serious injury. If you suspect a gas leak, get the system inspected and repaired by a qualified service technician as soon as possible.

8

INTRODUCTION

The motorhome 120/240 Volt AC system can be operated from three different power sources. Shore power is the most efficient and should be used whenever possible. The on board generator has a limited amount of 120 Volts AC output power. This can be used when shore power is unavailable. The inverter/converter supplies silent AC power by the use of the motorhome's house batteries. This source has limited AC power output and should be used sparingly.

The motorhome 120 Volt AC circuit breaker panel is supplied with power from two different sources: 50 amp shore power cord or the on board generator. The selection of the power source being used is done automatically by the use of an automatic electrical switching device known as a transfer switch.

BATTERY DISCONNECT - HOUSE

The main battery disconnects are located in the rear passenger side battery compartment. In the compartment are a pair of battery disconnects: One for the chassis batteries and the other for the house batteries. Turn off the batteries anytime the motorhome is going to be stored and not in use. If possible, leave the motorhome plugged into an AC source with the battery disconnects on. This will help prevent the batteries from going dead. Use of the battery cut-off switch at the entry door will not turn off all DC electrical items. There are small "parasitic" loads that are present on both the house and chassis batteries. Some are federal mandate items, such as the LP detector. If the motorhome will not be used or will be stored for more than 48 hours, it is recommended to turn the batteries off.

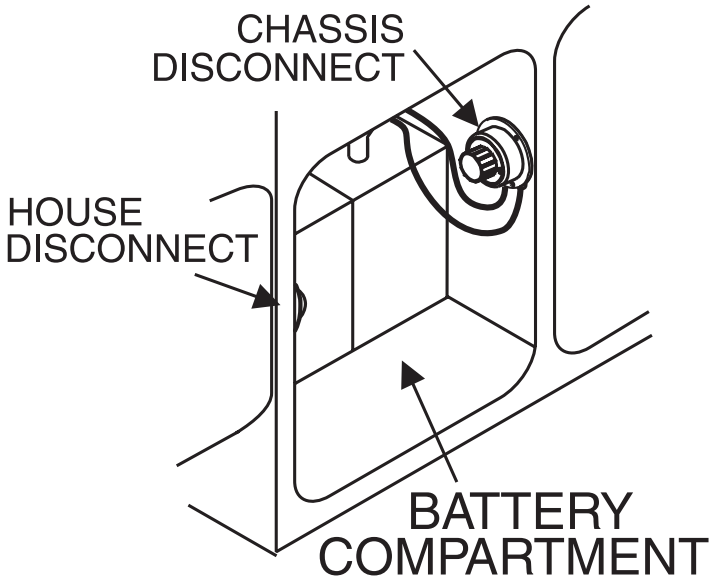

Shore Power

The power requirement for the motorhome is 50 AMP 120/240 Volt AC single phase. If 50 amp shore power service is available connect the motorhome to the 50 amp shore power source using the supplied shore power cord. One end of the shore power cord plugs into the 50 amp shore power source and the other plugs into the motorhome receptacle. The motorhome 50 amp shore power receptacle is located on the left side of the motorhome in the utility center.

NOTE: In many instances 50 amp shore service is not available and care will have to be used when operating the appliances and using the outlets so as not to overload the shore power service being used.

Generator

The generator can be selected for use when AC shore power is not available. The motorhome's on board generator has limited 120 Volt AC power output capabilities. The generator maximum amount of output power is specified in watts, which is calculated at an elevation of 500 feet above sea level. The figure will decrease with a higher altitude. Temperature also affects total maximum output. Fuel consumption is based upon a percentage of AC electrical load applied to the generator. While using the generator, care will have to be taken when operating appliances and outlets so as not to overload the generator. The generator is fueled from the main fuel tank.

Inverter/Converter (Optional)

The inverter/converter can be used for silent AC power if shore power is not available, and using the generator is not going to be selected as a secondary power source option. This device has limited AC power output, measured in watts. It operates only selected appliances and outlets. The inverter/converter is two components in one. Its first function is as an auxiliary 120 Volt AC power source that uses 12 Volt DC house battery power to invert to 120 Volts AC. The second function of the inverter/converter is to use 120 Volts AC power, supplied from either shore power or the generator, and convert it to 12 Volts DC power to recharge the batteries.

SHORE POWER HOOK-UP

If 50 amp shore power service is available all that is necessary is to connect the motorhome to the 50 amp shore power service using the supplied shore power cord. The cord is located in the compartment on the driver's side of the motorhome. After connecting the unit to shore power wait approximately one minute for the inverter to "stabilize" charging of the batteries before starting air conditioners or other large AC loads. In many instances 50 amp shore service is not available. Proper electrical adapters must be used to connect the supplied shore power cord to the shore service available. When connecting to anything other than 50 amp shore service use caution not to overload the supplied shore service breaker. Appliances and outlet loads will have to be operated in sequence, rather than all at the same time.

CAUTION: Avoid the risk of electrical shock or component damage by disconnecting from shore power during electrical storm activity. Use the inverter or start the generator if AC power is needed.

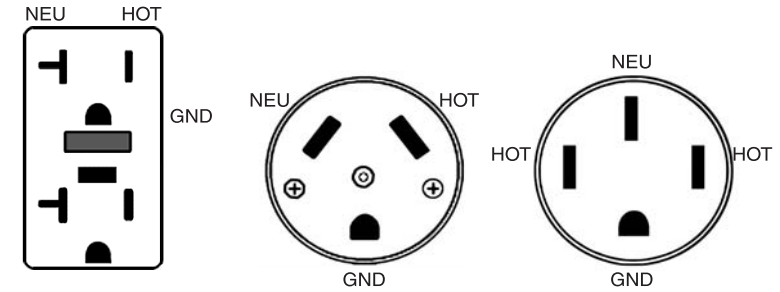

15-20 AMP 120 VOLT | 30 AMP 120 VOLT | 50 AMP 220 VOLT

NOTE: Above are the three types of shore power outlets most commonly used.

Transfer Switch

The transfer switch automatically transfers power from the shore cord, through the transfer switch and to the 110 Volt AC breaker panel. When the generator is used the transfer switch has a time delay built into it. This allows the generator time to warm up before an AC load is applied to it. The transfer switch will automatically select the generator over shore power, even though shore power is hooked up.

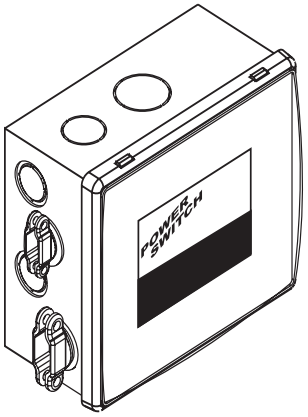

NOTE: To prevent damage to the transfer switch do not have appliances on or AC loads plugged into outlets when hooking up to shore power or starting generator. The transfer switch will begin to disengage between 85-90 Volts AC. Operation at this voltage may damage transfer switch, appliances or other items plugged into outlets.

WARNING: Keep fingers away from metal contacts of shore plug end. Avoid standing water. Serious electrical shock and personal injury can occur. To avoid the risk of an electrical shock turn the circuit breaker off for the shore power outlet before making shore power connection.

GENERATOR - 120 AC

The generator is located in the front compartment of the motorhome. The generator can be started from the following locations:

- The generator remote switch, located on the dash.
- The generator control panel, located on the generator.

Generator control panel:

1. Start/Stop Switch.
2. Hour Meter.
3. Output Breaker.

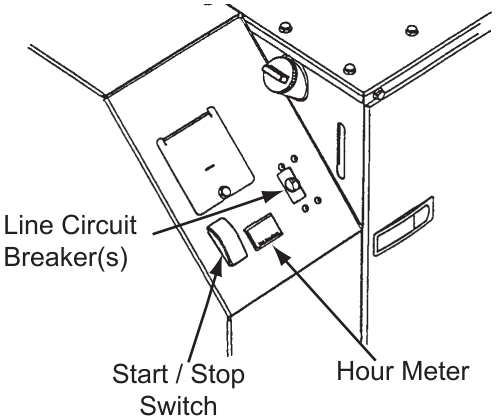

Prestart Checks

Prior to the first start of the day perform a general inspection including oil and coolant levels. Keep a maintenance log on number of hours in operation since the last service. Perform any service or maintenance that may be due.

- People and animals must be clear of hazards of electrical shock and moving parts.
- Appliances and other large AC electrical loads are off.

Starting the Generator

Push and hold control switch in **START** position until the generator starts. Release switch. On diesel models the control switch may flash up to 15 seconds, indicating engine preheat.

NOTE: Diesel models may require priming. Hold control switch in OFF position for one minute. Repeat if necessary.
The diesel generator fuel pick-up tube is cut to approximately 1/4 tank so as not to run the main engine out of fuel.

WARNING: Excessive cranking can overheat and damage the starter motor. Do not crank for more than 30 seconds at any one time. Wait at least two minutes before resuming. If the generator fails to start refer to the manufacturer's manual.

WARNING: When the motorhome is parked, position the dash air conditioner vent control in the OFF position to prevent outside air from entering the motorhome. The engine exhaust contains carbon monoxide, which is an odorless and colorless gas. Carbon monoxide is poisonous and can cause unconsciousness and/or death. Inspect the exhaust system thoroughly before starting the generator. Do not block the exhaust pipe or situate the motorhome where the exhaust may accumulate either outside underneath, or inside the motorhome or any nearby vehicles. Operate the generator only when safe dispersion of exhaust can be assured. Monitor the outside conditions to be sure that the exhaust continues to disperse safely.

WARNING: When parking near high grass be sure that the hot exhaust does not come into contact with the grass, it could be a fire hazard.

Stopping the Generator

Turn off the appliances and disconnect other AC loads being used. Allow the generator to run unloaded for at least one minute before shutdown. This will allow the engine to cool. Push and hold the control switch in the **STOP** position until the generator stops. Release the switch.

NOTE: Diesel models require only a momentary stop signal.

Powering the Equipment

The AC output of the generator powers the motorhome air conditioners, the AC inverter/converter charger, all appliances and items plugged into the electrical outlets of the motorhome. The number of electrical appliances that can be operated at any given time depends upon how much power is available from the generator. If the generator is "overloaded" or a short circuit causes "over current," either the generator will shut down or the circuit breaker will trip. If power consumption, in total, exceeds the generator power output compensation for temperature and elevation it may be necessary to operate some appliances in sequence, rather than all at the same time.

NOTE: The generator may shut down when it is loaded nearly to full power and an air conditioner (or other large motor load) cycles on. For a brief moment during start up an electric motor can draw up to three times the rated power. For this reason it may be necessary to operate some appliances in sequence when air conditioners or other large motor loads are on.

It is important to remember that air density decreases as altitude increases, causing the generator engine power to decrease. Power decreases at approximately 3% of the rated power each 1,000 feet (305M) of increase in elevation above sea level. It may be necessary to operate fewer appliances at the same time when the camping location is at a higher elevation. For example: 7,500 watt generator @ 5,000 ft. = 6,375 watts net. Temperature also affects maximum output watts. For example: @ 120º a 7,500 watt generator produces 6,000 watts net.

REFERENCE: The diesel generator may shut down for other reasons besides "overloads." A blink code may appear on the control switch. Refer to the manufacturer's manual to obtain an explanation of the codes.

Resetting the Circuit Breaker

If a circuit breaker trips in the main AC breaker panel, or on the generator control panel, there may be a short circuit or too much load.

NOTE: The generator will continue to run after a circuit breaker trips.

If a circuit breaker trips, disconnect or turn off as many loads as possible. To reset the circuit breaker switch, move the circuit breaker to **OFF**, then switch to **ON** to reconnect the circuit. If the circuit breaker immediately re-trips the electrical distribution system has a short or the circuit breaker is faulty. Call a qualified electrician. If the circuit breaker does not re-trip reconnect a combination of loads that will not overload the generator or cause the circuit breaker to trip again. Remember to compensate for elevation and temperature changes when reconnecting loads.

NOTE: An appliance or load may have a short if it causes a circuit breaker to trip after reconnection. DO NOT continue to reset breaker. Have the problem corrected before resuming operation.

Generator Exercise

If use of the generator is infrequent, “exercise” the generator once a month by operating it at approximately half the maximum rated output for two hours. This “exercise” will help promote better starting, more reliable operation and longer engine life. This procedure drives off moisture, relubricates the internal engine parts and replaces the old stale fuel with a fresh supply. It also promotes removing the oxides from the electrical switches and contacts.

INVERTER/CONVERTER (Optional)

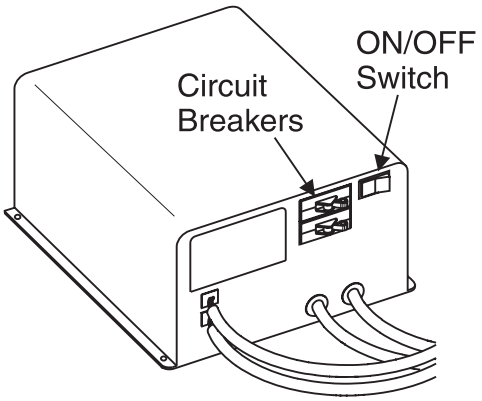

Use the inverter when shore power is not available and the generator is not going to be used as the secondary AC power source option. To turn the inverter on or off, momentarily depress the remote “on/off” button. This will supply silent AC power to most receptacles, the television and microwave. It is important to remember that use of the inverter will greatly increase house battery power consumption. Turn off the inverter when not in use to conserve house battery power.

NOTE: The switch on the inverter unit is to remain in the ON position.

Stand-by Operation

RC8 Remote Control.

The “stand-by” mode is activated by momentarily depressing the “on/off” inverter remote button while the unit is plugged into shore power or running from the genset. “Stand-by” mode is indicated by the remote status light. If for any reason the AC input has been discontinued to the inverter, the inverter will automatically start inverting. When AC power is resumed, the inverter will go back into “stand-by” mode.

NOTE: Remember to disable this function when not in use. It may run down the house batteries.

Battery Charging with the Inverter

The internal battery charger of the inverter will automatically charge the batteries when AC power is supplied to the AC input terminals of the inverter, either from shore power or from the generator. The time it takes to charge the batteries back to a full state varies greatly. It can take several hours or even days, depending on the inverter's internal setup parameters and state of charge of the batteries. Once the inverter has initiated a charge "cycle," the cycle is done in three steps.

The first step is "bulk" charge. The "bulk" charge will bring the DC voltage up high, initially between 14.2-14.5 Volt DC, depending on conditions. The bulk charge cycle is a timed event that the inverter manufacturer has built into the inverter.

The second step is the "absorb" cycle. A battery's voltage in this cycle is approximately 14.0 Volt DC. The length of the absorb cycle will vary with state of charge of the batteries.

The final step is the "float" charge cycle. Approximately 80% of the charging has been completed at this time. The float charge voltage is generally around 13.3-13.7 Volt DC. The last 20% of the charge cycle of the batteries typically takes the most amount of time. The charging cycle is initiated each time the inverter is disconnected or reconnected to AC power. Repeated charging cycles in succession can lead to boiling of the batteries from a constant higher than normal DC voltage. The inverter has a "pass-through" relay that trips when AC power is supplied to the input terminals. This will pass the power through the inverter and out to the outlets, appliances or sub panel.

NOTE: The inverter will still charge the batteries with AC applied regardless of the inverter's remote status.

Battery Temperature Sensor (BTS)

The inverter uses a battery temperature sensor to adjust charge voltage. When the battery temperature rises the BTS will send this information, registering as counts, to the inverter to decrease charge voltage. Voltage compensation with temperature variation is necessary to keep charge voltage at optimum figures. The BTS should be adhered to a house battery. If the BTS is unplugged the inverter default setting of 77º is used as the charge temperature reference point.

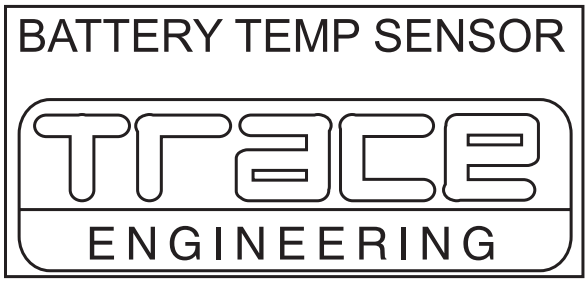

DISTRIBUTION PANEL - HOUSE 110
AC Panel

The AC distribution panel is located in the bedroom. The main AC panel 120 Volt circuit breakers receive power from the transfer switch, which is powered by either shore power or the on board generator. Power is introduced into the panel to the 50 Amp MAIN breaker first, followed by power being fed to the individual branch circuit breakers. The panel label describes the breaker layout and the item, outlet or appliance to which they pertain.

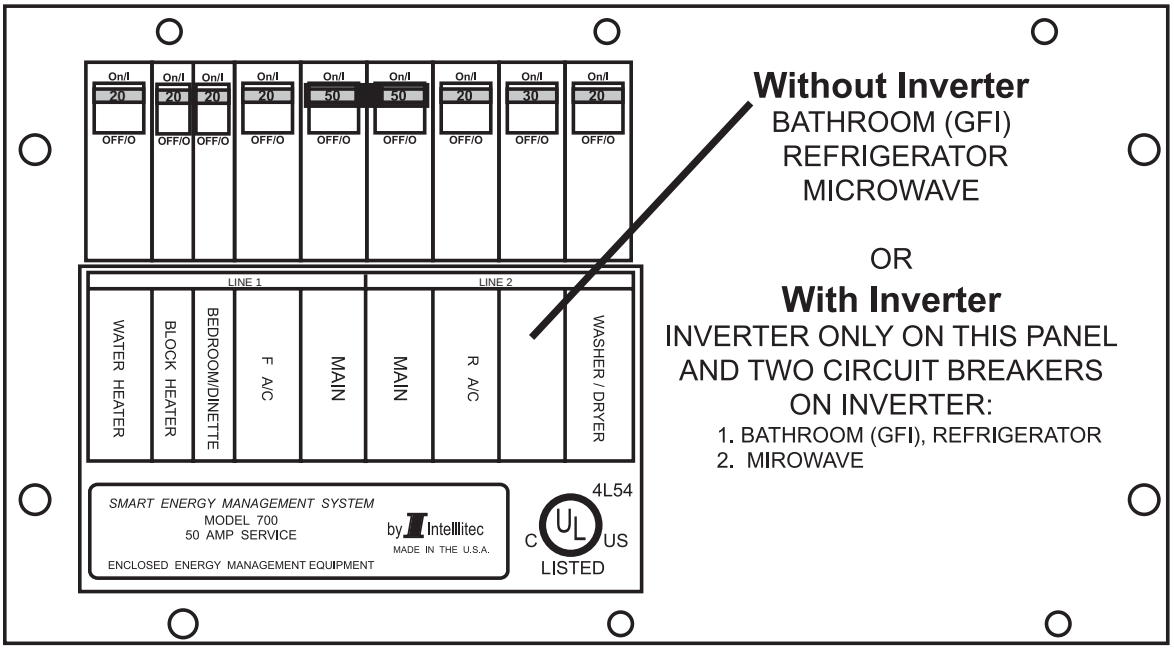

WARNING: This panel contains high voltage which can cause serious injury or death. Before beginning any work or testing procedures involving the electric panels, or any of the branch circuits, be sure the motorhome is unplugged from shore power, the generator is not running and the inverter is in the OFF position. Certain testing procedures can require the AC power to be on. Only qualified personnel or personnel with electrical backgrounds should attempt any testing procedures.

Branch circuit breakers supply AC power to the different items or “loads.” An electrical load is any item or device that will use current when supplied with an electromotive force. Should a breaker “trip” from over current use, or a short circuit condition, the load to which the breaker is supplying the electromotive force should be reviewed or disconnected to determine the cause of the trip. If no cause is found, or not readily apparent, reset the breaker by toggling the breaker to the **OFF** position, then back to **ON**. Should the breaker trip again after the load is reapplied it may indicate a fault with that particular load.

Do not continue to reset breaker until the problem has been corrected diagnosed and corrected.

Breaker current ratings are current set points in which the breaker is designed to operate. The internal configuration of the circuit breaker is designed

to trip when excess current is drawn through the breaker. The trip action of the circuit breaker can occur within milliseconds due to the speed at which electricity can travel. Breaker ratings are set to operate on a continuous load at 80% of the breaker's rated capacity. For example: A breaker with a 20 Amp rating will handle a continuous load of 16 Amps. This designed set point is when an inductive load is applied, such as when an electric motor turns on. As the motor starts to spin current consumption may momentarily exceed the rated capacity of the breaker. As the electric motor comes up to operating speed the electric motor's current consumption will fall. The AC current load then falls back into the breaker's rated 80% set point. This electric principle should be kept in mind when using anything other than 50 Amp shore service and using appliances with electric motors.

When using outlets, care should be considered when applying loads such as electric motors, heaters, coffee makers, toasters, hair dryer or other large current consuming loads. If the current rating of a load is not known it is usually stated on most electrical items. The rating will either be in amps or watts.

Current ratings stated on electrical items will change slightly with voltage fluctuations. As voltage increases current consumption decreases. As voltage decreases current consumption increases. This may explain why in some instances items operated at borderline voltage to current tolerances may seem fine in one location, but problematic in another.

NOTE: To calculate watts to amps, simply divide the watt figure by the voltage of which the item operates from. For example: The electrical item is rated at 1,370 watts. Divide that by the operating voltage of 115 Volts which equals 11.913 Amps. Use this formula to calculate load to current supply ratio.

Energy Management System - 50 Amp (Optional)

The Energy Management System is easily identified by the remote display panel located in the inside overhead compartment next to the entrance door.

The 50 Amp Smart EMS consists of two elements: the display panel and the bedroom distribution panel. The display panel is mounted in the inside overhead compartment next to the entrance door. The distribution panel, located in the bedroom, is a completely self-contained 120/240 Volt power distribution and energy management system intended to be used in recreational vehicles. It is housed in a sheet metal enclosure with removable front panel. It provides circuit protection for all the 120 Volt AC loads in the motorhome and a system of energy management to minimize the over-loading and tripping of circuit breakers.

Circuit Breakers:

The distribution panel offers slots for eight single or dual, standard 120 Volt circuit breakers. Two of these breakers, located in the two center stab positions, must be a 50 Amp unit that act as a main input protection for each of the lines supplying the remainder of the branch breakers (up to 12).

Energy Management:
The 50 Amp Smart EMS automatically senses the available power to the motorhome. It determines whether it is connected to a 120 Volt AC - 30 Amp shore power source, 50 Amp shore power source or generator source. Depending upon available power, it controls the operation of six possible loads as indicated on distribution panel. These may be any type load, but are typically heavier loads; those whose use can be “postponed” until a time when current is available for their use. If the available power source is 120 Volt AC - 30 Amp shore power it attempts to keep the total 120 Volt current draw to less than 30 Amps.

Operation:
If 120 Volt AC is not available at the distribution panel, L1 or L2 outputs, the system shuts itself off. This feature is intended to prevent the system from drawing current from the +12 Volt DC battery supply when not in operation.

When 120 Volt AC power is applied the system automatically powers up and determines the nature of the power source. If the generator is running 120 Volt AC will be present at the distribution panel L1 and L2 inputs. In this mode the energy management feature is disabled and all control relay contacts are closed, energizing all of the controlled loads. The control Module sends a signal to the display panel causing the load meter to display actual load current, the generator service indicator to light and all power status indicators to light.

If 120 Volt AC is present at the distribution panel L1 and L2 inputs the system will assume that 120 Volt AC, 30 Amp shore power is available and the energy management feature will be enabled. **If only 20 Amp service is available the user must select the 20 Amp service mode by momentarily pressing the 20/30 Amp select switch on the Control Panel.** Initially, all relay contacts are closed and the total current is monitored. If the total current should exceed the service limit the system will turn off the first load in the shedding table. As it turns the loads off it calculates the amount of current that was removed, which is the value for that load. This value is placed in memory. If the current remains above the service limit the system will turn off the next load in shedding table. Again, it calculates the amount of current that was removed and places this value,which is the value of that load, in memory. The system continues to turn off loads until the total current falls below the service limit or all of the six controlled loads have been shed. Through this process the system has “learned” the amount of current that each particular load draws. This feature compensates for the differences in current draw over a range of line voltage and ambient temperature, by re-learning the load each time it is turned off or “shed.”

The 50 Amp Smart EMS now wait until the total current is lower than the service limit and enough current is available (as compared with the amount in memory for the last load shed) before it will turn that load back on. This assures that there is sufficient current to operate the load.

NOTE: There is a two minute minimum delay period after a load is shed before the load will be turned on again to prevent air conditioners from turning on with a head pressure.

Three Hour Averaging:
The RVIA (Recreational Vehicle Industry Association) in conjunction with the NEC (National Electrical Council) have established rules regarding the rating of electrical systems and the use of energy management systems. One of these rules requires that, if any energy management system is used the average total load current for the system over a three hour period be limited to 80% of the service rating. For that reason the 50 Amp EMS calculates the average running current for the system and, if it exceeds 80% of the service rating, the EMS sheds loads to reduce the average current below that limit.

For example: If a system operating under 120 Volt AC, 30 Amp service has been running at the 30 Amp limit for three hours, the EMS will change its shedding threshold to 24 Amps and turn off loads until the 24 Amp limit is attained. If the user selects the 20 Amp service mode this limit will translate to 16 Amps. Because the EMS calculates a running three hour average, if the average load current drops below the limit the system will restore power to loads based on their impact on the limit. If the system is in the averaging mode the decimal point at the lower right corner of the load meter display on the display panel will illuminate.

Display Panel:
The display panel is located in the inside overhead compartment next to the entrance door and connects to the distribution panel located in the bedroom. Six power status LEDS indicate power is applied to those loads. These LEDs are on when the power is applied. The load meter has a two digit display to indicate the amount of current actually being drawn by all the appliances in the motorhome.

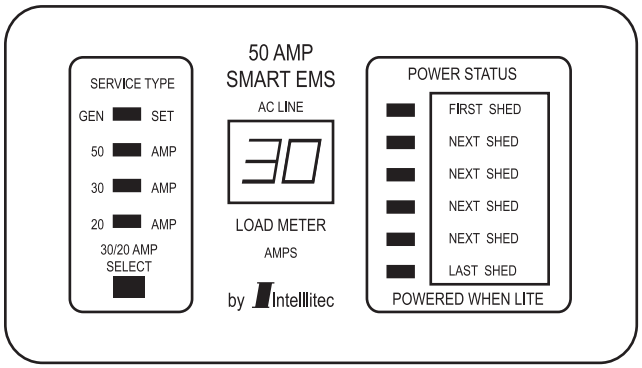

Four service type LEDS indicate the source for 120/240 Volt AC power. Three of these sources are automatically detected and indicated by the EMS: Generator Service, 50 Amp Service and 30 Amp Service.

The 20 Amp service mode is not automatically detected and the operator must manually select the 20 Amp mode when 20 Amp service is available. The service select button allows the current threshold to be set to either 30 Amps or 20 Amps to match the incoming service.

DISTRIBUTION PANEL - HOUSE 12 VOLT

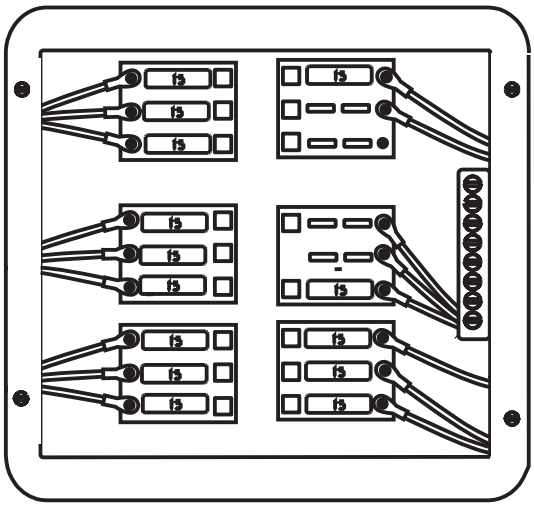

The 12 Volt house distribution panel contains fuses (located in the bedroom overhead cabinet) that protect the electrical circuits. These fuses are the standard automotive type. When a fuse is "blown," the wire in middle of the plastic case will be burnt. A broken, bad or "blown" fuse must be replaced with a fuse of the same rating and type. Use of a fuse with a different rating or type will defeat the circuit protection provided by that fuse and could result in damage to the motorhome's electrical system.

Fuses

AMPERAGE	COLOR
1	BLACK
2	GRAY
3	VIOLET
4	PINK
5	GOLD
7.5	BROWN
10	RED
15	BLUE
20	YELLOW
25	CLEAR
30	GREEN

Amperage Chart

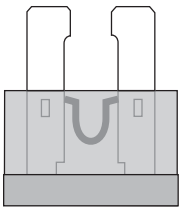

ATO Fuse

The 12 Volt fuses, located in this distribution panel, service the interior house lighting, ventilation fans, monitor panel, furnace and water heater. Should a fuse blow it will be evident by the broken metal strip located in the center of the fuse. Replacement fuses should be of the same amperage. If a higher rated fuse is installed it can damage the wiring. Fuse current set points follow much of the same electrical principle as the 120 Volt AC breakers. Using 12 Volt DC as the electromotive force can make it more susceptible to outside influences, such as corrosion from weathering or oxidation.

The large variety of applications this voltage can be used in makes it a diet staple for most of the recreational vehicle and automotive industries. The danger from shocks with this voltage is minimized, but can still occur. A good example is when a magnetic field is generated, then collapses when the power supply is cut. The result is a discharge that can reach tens of thousands of volts for a short time period. Care should be used when working with this voltage as current values can be quite high, like in the case of a battery cables.

Shorting a battery cable to ground with a battery at a reasonable state of charge can result in a fire or serious personal injury from a burn.

Tools of the Trade

One of the most widely used tools for testing a 12 Volt problem is the test light. Test lights come in a host of varieties, such as a light bulb with a probe and ground clip, to the more elaborate electronic ones that measure a wide scale of voltages and perform a variety of functions. A VOM or Volt Ohm Meter is used to perform a multitude of tests. It is generally used when exact values are needed for evaluation. These meters come in an analog or digital format. Either

of these two testing tools may be used, depending upon personal preference. If a 12 Volt light is not working, the test light may be better suited for this. In the case of a charging system problem the meter may be the tool of choice. In any situation the testing tool is an invaluable piece of equipment when it comes to determining an electrical problem.

Know When to Say No

Should it become necessary to use testing tools take certain precautions and consider three things. First, recognize when the problem is beyond your skill level. Nothing will create more mayhem than being armed with tools and going in an unknown direction. Good intentions have led to major problems. The second item to keep in mind is if something will cause more grief by being dealt with now than if it were left alone and repaired by a professional at a more convenient time. How many times have you said to yourself, “Oh this will only take a few minutes,” only to find it is taking an entire day and you wished you had not touched it? The third item to consider is whether or not the current situation may be potentially dangerous if left to be repaired at a more convenient time.

NOTE: Check all related fuses before assuming you have encountered an electrical problem or situation. Spare fuses should be kept on hand and can be purchased from an auto parts stores. A fuse description label is on the distribution panel cover.

WARNING: If a fuse blows replace the fuse with same amperage rating and type. Installing higher amperage fuses can damage the wiring or the item the fuse is protecting, or may cause a fire. If the fuse repeatedly blows after replacing it do not continue to replace it. Have the problem diagnosed and corrected by a qualified technician.

BATTERY - HOW IT WORKS

Batteries come in different sizes, types, amp hours, voltages and chemistries. There are nearly as many descriptions of battery types and how they should be used as there are people willing to offer advice on them. Although it is not possible to cover batteries in their entirety, there are guidelines that can be followed to ensure that the batteries are well maintained.

The operation of the battery is based on a chemical reaction. The battery is a container of lead plates, insulators and a solution of distilled water and sulfuric acid. The solution, when mixed together, is known as “electrolyte.” The 12 Volt battery is actually six batteries in one case. When charged, each cell has a voltage of 2.1 Volts. When six cells are hooked together this makes a 12.6 Volt battery (fully charged).

Electrons are stored on the negative plates. When a load (eg. a light bulb) is put between the positive and negative terminals, the electrons move from the

negative plate to the positive plate through the “load” and then back to the ground terminal. At this time the sulfuric acid leaves the water and adheres onto the plates of the battery. The electrolyte solution keeps the electrons from flowing while the battery is in the “at rest” position.

Charging the battery moves the sulfuric acid back into solution with the distilled water. A battery left in a low or discharged state will cause the acid to “sulphate.” In attempting to recharge the battery, the acid has become hardened and no longer will leave the plates and enter into the liquid solution with the distilled water. The lowered acid to water ratio has a direct affect on the battery’s ability to release the stored electrons (power output) and the length of time it can perform (reserve capacity). Batteries left in a discharged condition will readily freeze. This can crack the case allowing the solution to spill, it can also warp the plates. The acid acts like an “antifreeze” for the battery. This is why batteries should not be left or stored in a “discharged” condition.

Starting Battery

Starting batteries are designed for high output cranking power, but not for deep cycling like the house batteries are designed to do. Starting batteries will not last long in deep cycle application. The way they are rated should give a good indication of their intended use. “Cold Cranking Ampere” is a measurement of amperage output that can be sustained for 30 seconds. Starting batteries use thin plates to maximize the surface area of the battery. This allows a very high starting current but lets the plates warp when the battery is deep cycled (discharged).

Deep Cycle Battery

Deep cycle batteries are best suited for use with 12 Volt operated lights, appliances and inverters. Deep cycle batteries are designed to have a majority of their capacity used before being recharged. These are available in many sizes and types. The most common is a non-sealed, liquid electrolyte battery. The non-sealed types have battery caps. The caps should be removed periodically to check the level of electrolyte. When a cell is low, only distilled water should be added. Water consumption will vary depending on many factors: how far the batteries are depleted, how long the voltage is being applied to charge the batteries, how much voltage is used and how often this occurs.

NOTE: Tap water contains minerals which can alter battery chemistry and ruin the battery. Use only distilled water when refilling the battery.

Battery Maintenance

At a minimum, the battery electrolyte level should be checked at least once a month. Check the level sooner if the battery is frequently used. The level should be above the top of the plates, but not overfull. Most batteries have a plastic cup or well. The electrolyte level should be approximately 3/8” below the well to allow room for expansion while the battery is being charged. Over-filling the battery will allow the electrolyte solution to boil or gas out of the battery cap. Remember to use only distilled water to refill the battery. A battery with a low electrolyte level will boil the water out rapidly once the plates have been exposed to air. This process may take only a matter of hours. If this has happened the battery is more than likely damaged.

After checking the battery’s electrolyte levels it is also a good idea to check the battery connections for tightness and corrosion. If any corrosion is found disconnect the cables (make sure to mark their locations) and carefully clean them with a mild solution of baking soda and water. There are also aerosol products available that will work. This will neutralize any acid that may be present. Do not allow the solution to enter the battery as this will damage the electrolyte balance. Use water to rinse the top of the battery and surrounding area when done. Carefully hook the cables back to the battery. Coat the terminals with petroleum jelly or an anticorrsion grease.

The battery cable to battery terminal connections should be metal to metal. Periodically check the batteries for corrosion. Look for cracks and check the vent plugs. Replace them if they are cracked or missing. Keep the top of the batteries clean. The accumulation of electrolyte and dirt may permit small amounts of current to flow between the terminals, which can drain the battery.

WARNING: Liquid lead acid batteries produce hydrogen gas while being charged. This is highly explosive. Do not smoke around batteries. Extinguish all flames in the area. The hydrogen gas may explode resulting in fire, personal injury, property damage or death.

Testing the Battery

The only way to test a battery’s electrolyte solution is with a hydrometer. Many styles are available, from types with cylinder graduation (shown here) to types with floating balls. Hydrometers can be purchased from most auto parts stores. The hydrometer tests the battery’s electrolyte solution which is measured in specific gravity. Distilled water has a specific assigned gravity of 1,000. The hydrometer is calibrated to this mark. Pure sulfuric acid has a specific gravity reading of 1,840. The acid is 1.84 times heavier than water. The electrolyte solution is about 64% water to 36% acid (fully charged battery). Hydrometers with cylinder graduation are graphed and the exact state of specific gravity can be determined.

Temperature and recent battery activity (charging or discharging) affect the hydrometer readings. It is best to check the battery when it has been “at rest” for at least three hours, although readings taken at other times will give a “ball

park” figure. When using the hydrometer, draw the electrolyte solution up into the tube. Allow the hydrometer to attain the same temperature as the electrolyte solution. Note the reading for that cell. Complete the same test for the rest of the cells on that battery bank.

The hydrometer is calibrated at 80° F. Temperature affects the hydrometer readings. The higher the electrolyte temperature, the higher the specific gravity reading. The lower the temperature, the lower the specific gravity reading will be. Add or subtract four points for each 10° variance from the 80° F chart. Readings between cells should not vary more than 50 points.

If one cell in a particular battery bank being tested is at a 50% state of charge while the others are indicating a full charge, charge only that battery to see if the low cell will come up. At the same time, do not over charge the “healthy” cells.

If the low cell does not come up after charging, this battery can damage the rest of the battery bank and should be replaced. An accurate digital volt meter + - .5% will also give an indicator of the battery’s state of charge.

Another test that can be performed is to place a specific load on the battery for a predetermined length of time equal to that particular battery’s rating. This machine is usually an adjustable carbon pile that can vary the load being applied to the battery(s) while monitoring voltage to see if they will perform to their specific rated capacities.

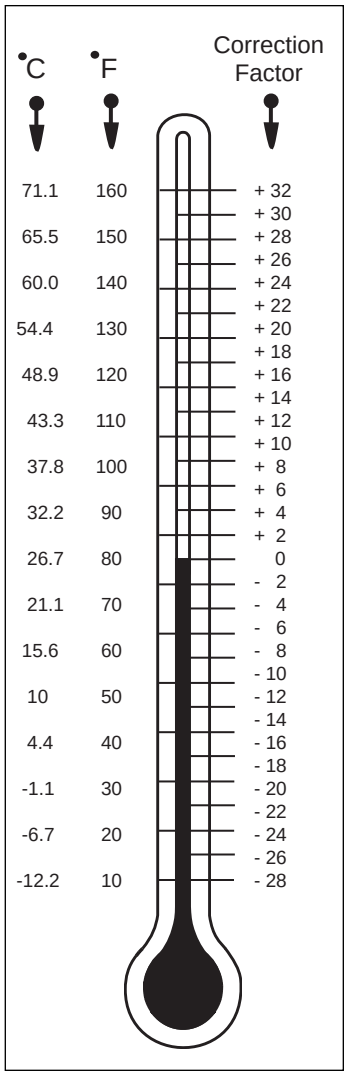

Temperature Correction Chart.

NOTE: See the chart for temperature compensation. Liquid levels should be even between the cells of the battery being tested as it will affect the accuracy of the test.

WARNING: Sulfuric acid in the batteries can cause severe injury or death. Sulfuric acid can cause permanent damage to eyes, burn skin and eat holes in clothing. Always wear splash-proof safety goggles when working around the battery. If the battery electrolyte is splashed in the eyes or on skin, immediately flush the affected area for 15 minutes with large quantities of clean water. In case of eye contact, seek immediate medical aid. Never add acid to a battery once the battery has been placed in service. Doing so may result in hazardous splattering of electrolyte.

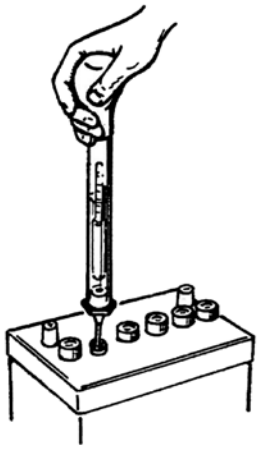

Hydrometer (Cylinder Type).

Reasons Why Batteries Fail

1. Physical Condition:

Active material flakes off the plates and falls to the bottom of the cell. This is normal, but sediment accumulation under the plates can short out a cell. The plate separators fail to insulate positive and negative plates in a cell and the cell becomes shorted, ruining the battery.

2. Insufficient Electrolyte:

This allows exposed portions of the plates to sulfate rapidly. This reduces the battery's ability to accept a charge and the battery capacity is reduced. Accelerated erosion of the lower portions of the plates occur from higher than normal acid content due to water loss. Only the water evaporates, not the acid. The battery also has a higher internal resistance when low on water. Add only distilled water. Fill each cell to the bottom of the vent well when the battery is warm. Filling a very cold battery with water to the bottom of the vent well will cause overspill when the battery warms up and the plates expand. A Battery Formula For Failure: the battery has a higher internal resistance when low on water, therefore: *high resistance = more heat = shorter battery life!*

3. Sulfation:

When a battery remains discharged for too long the accumulated lead sulfate in the plate material solidifies and cannot reenter the electrolyte. When a battery is left in a discharged state the lead sulphate will crystalize. Charging the battery does not move the crystallized lead sulphate off the battery plate. The battery is damaged.

4. Overheating:

The chemical reaction inside of the battery is increased when the battery temperature rises above 125º F. This increases the corrosion of the plates and reduces the battery life. When overheated, the battery plates tend to buckle and destroy the structural integrity of the battery.

5. Freezing:

When the electrolyte freezes, ice formed dislodges the active material from the plates. The battery case may crack and the electrolyte will leak out when thawed. It is especially important to keep a battery at full charge in cold weather to prevent freezing. The high specific gravity of a fully charged battery does not freeze as easily. Never attempt to charge a frozen battery. Warm it up first.

6. Corrosion:

Corrosion from spilled or splashed electrolyte form deposits that can conduct electricity and can cause battery drain. Clean off all corrosion, especially around the battery terminals and on the top of the battery. Prevent accumulation by coating the terminals and the exposed metal cable connectors with high temperature grease.

7. Overcharging:

Overcharging rapidly converts water to gas and decreases the electrolyte's water content as the water evaporates. The electrolyte level drops and becomes more acid in content. This subjects the plates to a higher concentration of sulfuric acid and results in early battery failure.

NOTE: Any time more than one or two ounces of distilled water is added per-cell per-thousand miles, check the motorhome charging system for overcharging. Prolonged overcharging generates excessive heat inside the battery, which buckles the plates and destroys the battery. It is a fact that over 50% of battery failures are caused by overcharging.

Battery Voltage & Current

Why does the voltage on a discharged battery measure the same as a fully charged battery until the loads are applied? The simple answer to this might go as follows: A battery creates electrical power by converting energy from a chemical reaction into electrical energy. As this reaction slows down the battery voltage will drop. In a lead acid battery the electrolyte conductivity (how well electrical current can flow through it) changes. The same current may be available but the rate of the reaction decreases, causing a voltage drop.

Another way of looking at this is to use the analogy of a water pump (a battery is an electric pump). The pressure in psi (pounds per square inch) that a pump delivers is like a battery's voltage. The volume of water in GPM (gallons per minute) is like the electrical current. Look at a 12 psi pump with no loads (the pump is running but the outflow valve is turned off). The pump will run and the internal pressure of the pump will build up to some point higher than 12 psi. When the valve is opened, and the water is free to flow into the loads, the pressure will drop to the rated output pressure of 12 psi, but only if the load is not too big. If the pump is designed to maintain 12 psi at 15 GPM, and a load demanding 20 GPM is connected, the pump will not be able to keep up and the pressure will get sucked down to a lower psi. If the load is reduced or removed the pump will catch up and return to its rated 12 psi pressure. If the pump has an infinite source of water, such as a lake or the water utility (this is like the grid, no battery), the pump will never run out of pressure. If the pump never runs out of pressure, and is operated at or below it's 15 GPM level, it will hold 12 psi. However, a pump that is connected to a water tank with a finite capacity will

start to lose the ability to hold pressure as the level of water in the tank drops. Think of siphoning water from a bucket. As the level of the water drops, the volume of water exiting the siphon slows down.

When the tank is full it is capable of feeding more “pressure” to the pump inlet due to gravity, and the pump always has enough water available to maintain its rated pressure and volume. However, if the water tank gets low the pump will not have enough water volume coming in to maintain 12 psi at 15 GPM. If the loads are removed from the pump by closing the valve on the outflow, even with low pressure in the tank the pump will eventually pressure up to 12 psi. It will just take it longer to get there. When the valve is opened the pump will sustain 12 psi for a brief period, but since the tank is no longer feeding the pump as fast as needed the pressure will eventually drop. This analogy can be restated by replacing the pump with a battery, pressure with voltage, volume with amps, outflow valve with a switch, water with electricity and the water tank with the battery electrolyte.

The level of the tank could be thought of as the rate of the reaction occurring in the electrolyte. When the battery is fully charged the electrolyte has an excess of reactions taking place to feed the battery terminals. This tapers off with time as the electrolyte is spent so maintaining voltage becomes possible. With no loads the discharged electrolyte will be capable of producing close to the rated voltage, but only after a period of time has elapsed for enough of a reaction to take place to bring the voltage back up. Hopefully, this explanation will make clarify why a battery measured at rest can indicate close to its rated voltage but will not run a load.

Battery Charge Time & Consumption Rate

Calculating Run Times:

Calculating run time figures when operating 120 Volt AC electrical items with an inverter can be exponential. This is due to battery characteristics. Flow characteristics of electrons vary with different battery types and chemical compositions. Deep cycle batteries are generally designed to slowly release a majority of their charge capacity. Deep cycle batteries are rated in amp hours (Ahrs) with the discharge occurring over an extended period of time before the battery is charged. Engine starting batteries are designed to quickly release large amounts of current for short durations, without depleting battery reserves. Commercial type batteries bridge the gap of deep cycle and engine batteries. Commercial batteries release medium amounts of current over a longer period of time but they are not designed to cycle their charge capacity.

The working range of a deep cycle battery is between 50 and 100% state of charge (SOC). Deep cycle batteries should not be cycled below 50% state of charge. Discharging a deep cycle battery below 50% state of charge shortens the life of the battery. Deep cycle batteries use an amp hour rating which is usually calculated over a 20 hour discharge interval. For example: A deep cycle battery with a rated capacity of 100 Ahrs. is designed to release current

at the rate of 5Amps per hour. Multiply a 5 Amp load over a 20 hour discharge period equals the rated 100 Ahr. capacity. These discharge figures are calculated with the battery starting at 100% state of charge with the battery at 80º F when the discharge cycle begins. However, increasing the discharge load applied to the battery from five amps to ten amps on a 100 Ahr battery does not yield 10 hours of discharge time. This is due to the internal reactions which occur when a battery is discharging. Actual discharge time for a 10 Amp load may be closer to eight hours of discharge time. Increasing the load applied to the battery to 20 Amps will not yield five hours discharge time but may be less than three hours. It might be understood as a point of diminishing return.

Calculating applied loads to an inverter to approximate run time from the battery amp hours available is not an equal trade up when voltage is inverted and amperage is calculated. When the inverter is used to operate an AC load it uses approximately ten times the DC current needed from the battery when inverting 12 Volts to operate the 120 Volt item. There is also a small efficiency loss of about 10% when inverting. For example: When using the inverter to operate an AC electrical item, which has a current draw rating of 2 Amps, the inverter will use over 20 Amps DC power from the batteries.

Determining Current Consumption:

First determine the amount of current used by an AC item. For example: The television is rated at 200 watts at 120 Volts. Calculate watts to amps. Divide 200 watts by the operating voltage of 120, this equals 1.6 Amps. Multiply 1.6 Amps AC current by a factor of ten the inverter will use, this equals 16 Amps DC battery current. Add the revised 10% efficiency loss figure, this calculates to a total of 17.6 Amps DC. If the battery bank capacity is rated at 500 Ahrs., actual elapsed time to the suggested 50% state of charge would net viewing time for the television at approximately 13 hours in ideal conditions.

The run time figure will vary greatly with the actual state of charge of the battery bank when the discharge process begins. Ambient temperature, combined with other working loads such as lights and parasitic loads applied to batteries, affect run times. Calculating the exact run time is not precise due to all the variables and equations involved; however, an approximate time figure can be obtained. Proper battery maintenance and charge cycles affect battery performance. Observe the battery condition with hydrometer and voltage readings. Use only distilled water when filling batteries. To achieve the highest quality of battery performance and longevity keep batteries in their proper operating range.

Battery Specifications - House

CHASSIS	AH (20HR)	CCA	RC (25A) MINUTES
Chassis 8D MHD (1) 315 HP Only	240	1400	450
Chassis 12 Volt Chassis 31P-MHD (2 each)	240	950	450
6 Volt Domestic U2200 (4 each)	450*	**	447

**Total battery bank capacity. **Battery connections are made in a Series/Parallel connection. Domestic batteries are not rated in Cold Cranking Amps (CCA).*

Battery State of Charge vs Voltage/Specific Gravity

VOLTAGE	SPECIFIC GRAVITY	STATE OF CHARGE	DEPTH OF DISCHARGE
12.66	1.265	100%	0%
12.45	1.225	75%	25%
12.25	1.190	50%	50%
12.05	1.145	25%	75%
11.90	1.100	0%	100%

CUMMINS ENGINE COLD CRANKING AMPS REQUIREMENTS

ISB	1100	CCA	12 VOLTS
ISC	1250	CCA	12 VOLTS
ISL	1500	CCA	12 VOLTS
ISM	1800	CCA	12 VOLTS
N14	1800	CCA	12 VOLTS

BULB USAGE CHART - INTERIOR

INTERIOR BULB CHART

LOCATION	BULB NUMBER
Ceiling Light (Incandescent)	1141
Ceiling Light (Fluorescent)	F815 C/W
Living Room Wall Lamp	C 921
Bedroom Wall Lamp	1075

NOTES

AMBASSADOR

SECTION 9
ELECTRICAL SYSTEM - CHASSIS

9

INTRODUCTION

A majority of the lighting and appliances are designed to operate from 12 Volt DC (direct current) power. This is why the batteries play such an important role in the function of the motorhome. There are exceptions with appliances such as the microwave or television; however, indirectly they still operate from 12 Volt DC power, as they can be operated from the inverter. The chassis functions (engine, transmission, dash air, etc.) are also 12 Volt DC.

With the all technological advancements taking place in the past several years manufacturers have now incorporated electronics into these systems. It is important to keep the 12 Volt system(s) in good working order. These systems, with their incorporated electronics, are voltage sensitive. Some items can be damaged if the DC voltage is not maintained within the designed specifications.

There are two separate 12 Volt systems. One is the chassis system; the other is the house system. These two systems, for the most part, are separate from one another. The house system does not operate engine functions; the engine system does not operate house functions. However, within the two systems there are some inner connections. For example: While the motorhome is in operation, the alternator on the engine charges the house batteries. Likewise, while the motorhome is plugged into shore power or the generator is running the engine battery(s) are being charged. Each system will supply 12 Volt DC power to the 12 Volt distribution panels. The 12 Volt panel that services a majority of the chassis system functions is located outside by the driver's front wheel. The other panel, located in the bedroom, services the house interior functions such as the interior lighting and appliances. Become familiar with these panels and the items they operate.

The two different systems, engine and house, have their own set(s) of battery(s). The engine battery supplies 12 Volt DC power to the front distribution panel located in an outside compartment by the driver's side front wheel. This panel contains mostly engine system fuses and wiring such as headlights, taillight, dashboard functions, gauges, etc. The house battery(s) supplies 12 Volt DC power to the distribution panel located in the bedroom. This panel contains fuses for the house, interior lighting and appliances, such as the furnace and water heater.

BATTERY DISCONNECT - CHASSIS

The main battery disconnect for the chassis battery turns the DC power on or off to the front run box. Most chassis and engine functions are interrupted when the battery disconnect is turned off. Some electronic items require a constant power source for memory retention such as the dash. Some electronic components of the engine and transmission require a constant power source. Turn the main battery disconnect switch off when the motorhome is going to be stored or performing electrical maintenance. If possible, leave the motorhome plugged into an AC source with the battery disconnect switch on. This will

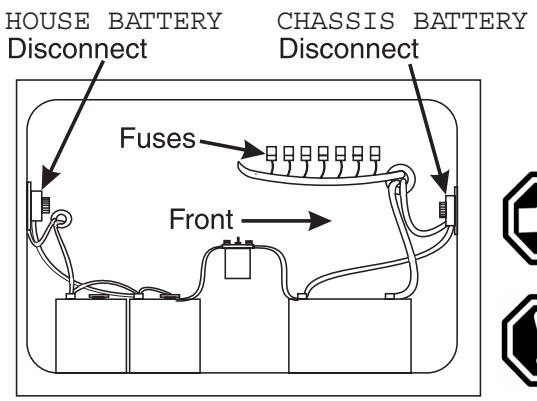

help prevent the possibility of dead batteries. If an AC source is not available and the motorhome is not going to be used or is stored more than 48 hours it is recommended to turn the battery disconnect switch off.

NOTE: The solar panels will charge the batteries with the disconnect switch off.

WARNING: When the frame or other welding is involved for motorhome repair or modification the following precautions are required to protect electronic components in the motorhome chassis:

1. **Disconnect the (+) positive and (-) negative battery connection and any electronic control ground wires connected to the frame or chassis.**
2. **Cover electronic control components and wiring to protect from hot sparks.**
3. **Disconnect the wiring harness connectors at the transmission electronic control unit.**
4. **Do not connect welding cables to electronic control components.**
5. **The welding ground cable should be attached no more than two feet from the part to be welded.**

BATTERY - CHASSIS

The chassis battery operates only chassis and engine functions. The chassis battery is a crank type battery, producing the high amperage needed to start the engine. Engine starters initially require a large amount of current to crank an engine. Initial starter amperage draw exceeds 1,200 amps. The type of application in which the engine battery is used differs from the house battery application. The engine battery state of charge remains consistent. Maintenance is still required with an engine battery. Regular electrolyte level checks and hydrometer readings should be performed. High electrolyte consumption or inconsistent hydrometer cell readings may indicate a charging system problem. Perform a charging system and current draw check if the battery is exhibiting abnormal hydrometer readings.

NOTE: Replacement batteries should have the same cold cranking amp (CCA) rating.

Battery Specifications - Chassis

CHASSIS	AH (20HR)	CCA	RC (25A) MINUTES
Chassis 8D MHD (1) 315 HP Only	240	1400	450
Chassis 12 Volt Chassis 31P-MHD (2 each)	240	950	450
6 Volt Domestic U2200 (4 each)	450*	**	447

**Total battery bank capacity. **Battery connections are made in a Series/Parallel connection. Domestic batteries are not rated in Cold Cranking Amps (CCA).*

Approximate Hours at Ampere Load					
	5 AMPS	10 AMPS	15 AMPS	20 AMPS	25 AMPS
U2200	55.0	22	12.5	9.1	7.0

Battery State of Charge vs Voltage/Specific Gravity			
VOLTAGE	SPECIFIC GRAVITY	STATE OF CHARGE	DEPTH OF DISCHARGE
12.66	1.265	100%	0%
12.45	1.225	75%	25%
12.25	1.190	50%	50%
12.05	1.145	25%	75%
11.90	1.100	0%	100%

CUMMINS ENGINE COLD CRANKING AMPS REQUIREMENTS			
ISB	1100	CCA	12 VOLTS
ISC	1250	CCA	12 VOLTS
ISL	1500	CCA	12 VOLTS
ISM	1800	CCA	12 VOLTS
N14	1800	CCA	12 VOLTS

CCA Rating are at 0º F. These are the minimum requirements.

DASH - *Indicator Lamps*

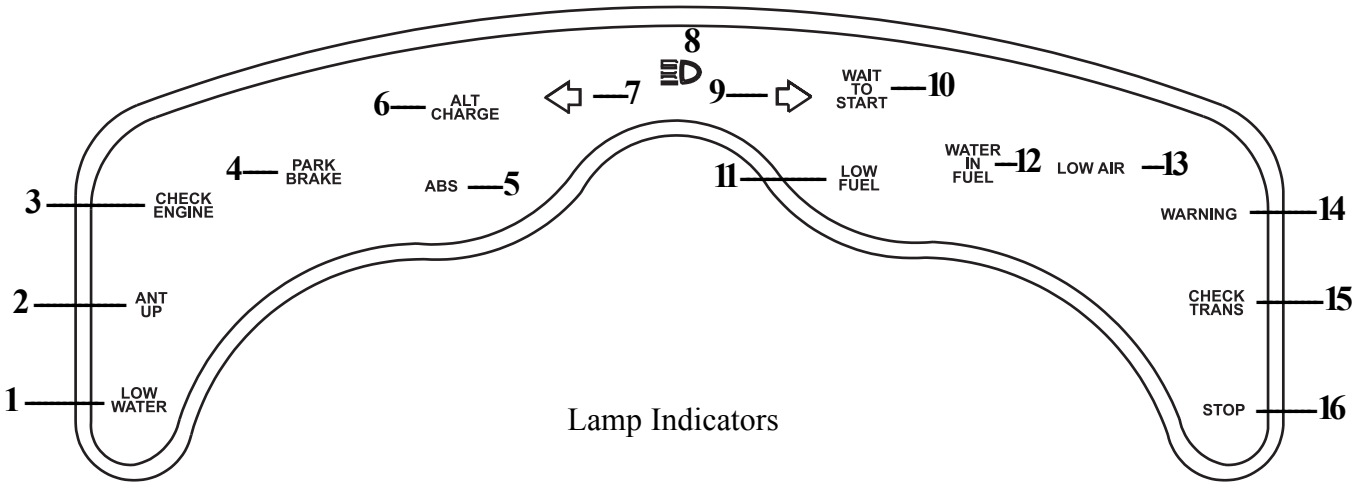

Lamp Indicators

1. Low Water:
Indicates coolant level in the radiator is below acceptable level.

2. Ant Up:
Indicates TV antenna is not resting flat in the storage cradle.

3. Check Engine:
Indicates problems with the Cummins Engine.

4. Park Brake:
Indicates parking/emergency brake is applied.

5. ABS:
Indicates ABS possible fault in the ABS brake system. Also indicates faults codes for service technicians.

6. Alt Charge:
Indicates a failure within the alternator charging system.

7. Left Turn Indicator:
Indicates left turn indicator circuits active.

8. High Beam:
Indicates high beams when illuminated.

9. Right Turn:
Indicates right turn indicator circuits active.

10. Wait to Start:
Monitors the intake air heater and intake manifold temperature.

11. Low Fuel:
Indicates fuel level is becoming low.

12. Water in Fuel:
Indicates water has been detected in the fuel system.

13. Low Air:
Indicates air storage tank low and air systems may not operate properly.

CAUTION: The Low Air Lamp will only illuminate when a low air indication is present. You should check the operation of the Low Air Lamp when air tank is drained.

14. Warning:
Indicates out of range condition exist within the engine protection circuits.

15. Check Trans:
Alerts of problems related to the Allison Transmission.

16. Stop:
Alerts of severe out of range condition within the engine protection circuits.

Range Inhibited Lamp:
Indicates operation of the transmission is being inhibited and range shifts are inhibited. Located on the left switch panel.

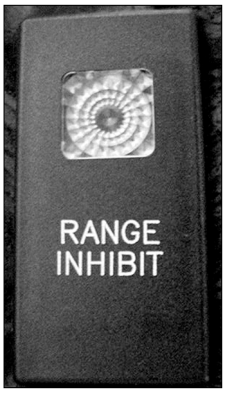

Range Inhibit Lamp.

Gauges

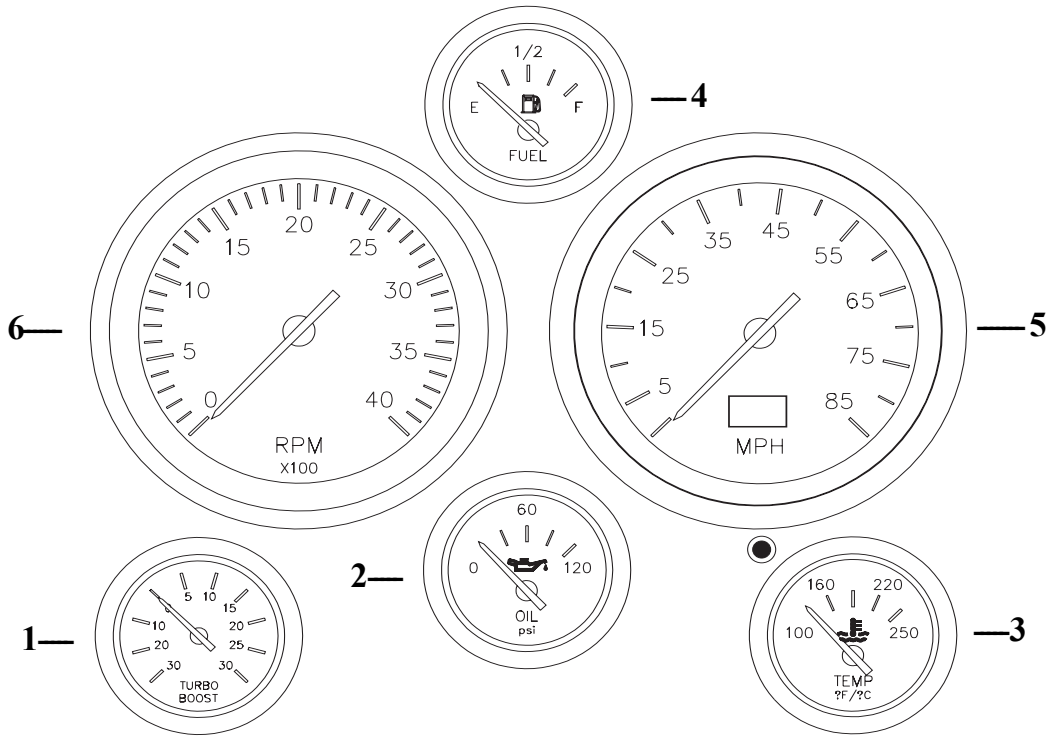

1. Turbo Boost Gauge:
The turbo boost gauge indicates the boost pressure produced by the engine turbocharger.

2. Engine Oil Pressure Gauge:
Indicates the pressure of the oil and not the amount of oil in the system. Normal ranges are between 15 psi and 60 psi.

3. Engine Coolant Temperature Gauge:
Under average conditions, the gauge will read between 160º F and 212º F. Monitor this gauge frequently when climbing hills, towing, or in high ambient temperatures. Overheating may be a result of any of the following conditions:

- Low coolant level.
- Fan failure.
- Mechanical failure of the hoses or belts.
- Something blocking the charge air cooler fins.
- Climbing a long hill on a hot day.
- Towing a heavy trailer.
- Idling for long periods of time.

4. Fuel Gauge:
The fuel gauge will register the approximate fuel level in the tank when the ignition switch is in the run position.

NOTE: Fuel mileage varies with driving style and road conditions. Always average more than one tankful to obtain a more accurate figure. The diesel generator system uses fuel from the main tank, and will affect fuel mileage figures. The diesel generator will not operate below 1/4 tank of fuel to insure there is enough fuel to run the main engine.

5. Speedometer:
Indicates the speed MPH and is located on right side of the instrument cluster. The Odometer/Trip Meter is built in to the meter.

Odometer/Trip Meter:
This meter records the mileage driven, as well as keeps track of mileage on a trip. To operate the trip meter, push the round black button under the speedometer. This changes the odometer mileage reading to the trip mileage reading. The black reset button sets the trip mileage back to zero when held for 2-3 seconds. Release the button and momentarily press the button again. This changes the trip mileage reading to the odometer mileage reading.

6. Tachometer:
Displays the engine speed in revolutions per minute (RPM). Normal low idle speed can vary from 700 rpm to 875 rpm. The tachometer reads the output pulse of the alternator. If the tachometer quits, have the alternator checked immediately.

Switches - Dash

Radio On/Off Switch:
This switch enables 12 Volt DC to power the dash radio from the dash area.

Generator On/Off Switch:
Starts and stops the generator from the dash area.

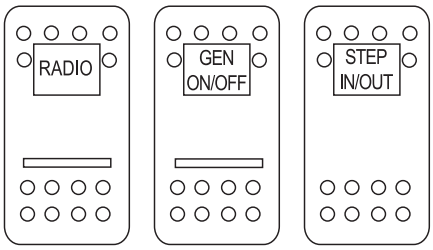

Radio, Generator, Step In/Out Switch.

Step In/Out Switch:
The motorhome is equipped with a sliding stepwell cover that is extended and retracted by use of a dual action air cylinder. The air cylinder is controlled by an electrically operated air valve. The air solenoid, known as a “MAC” valve receives air pressure from the front air tank. The “MAC” valve will direct the air pressure to either side of the dual action air cylinder, moving the stepwell cover in or out. The stepwell cover will not operate without sufficient air pressure (approx. 60 psi).

WARNING: Stepwell cover is under air pressure. When operating the stepwell cover be sure there are no pets, shoes or other obstructions in the stepwell area. Do not operate the stepwell cover while standing in the stepwell area.

MAC Air Valve Adjustment:

The "MAC" air valve is located in the front of the motorhome, behind the generator door mounted to the firewall. The easiest way to identify the location is have someone operate the Stepwell Cover with the generator door open and listen for the release of air. The "MAC" air valve has two adjustment screws. The adjustment screws regulate the air flow to either side of the air cylinder. Adjusting the screws will affect the speed at which the air cylinder moves in or out.

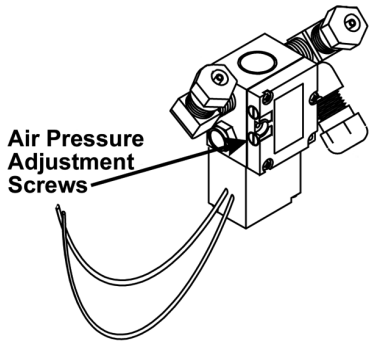

- **Clockwise adjustment on the screw will decrease air flow.**
- **Counterclockwise adjustment on the screw will increase the air flow.**

The front door models are equipped with a sliding Stepwell Cover that is extended and retracted by two switch locations. One switch is located just inside the entry door to the right, next to the passenger seat. The second switch is located on the passenger control panel labeled **Step In/Out**.

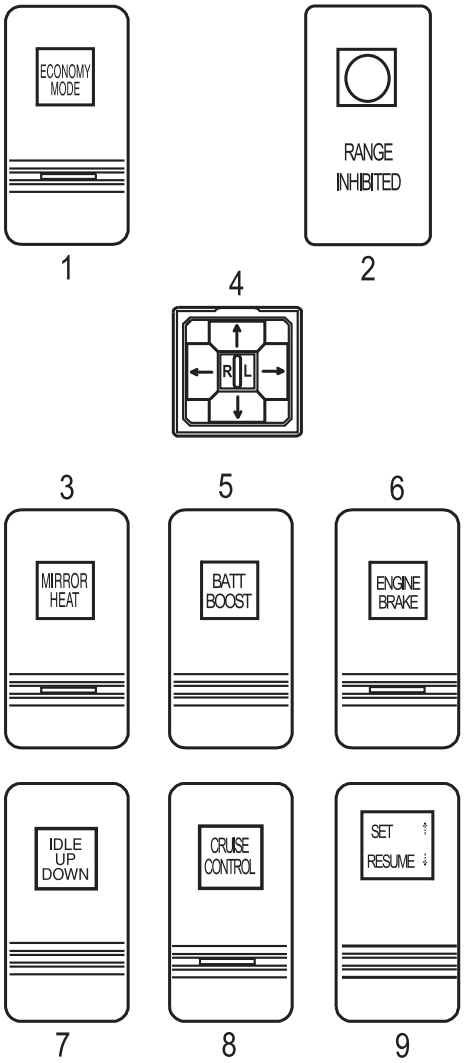

Switch Panel:

1. Economy Mode Switch:

This switch is used in conjunction with Allison Transmission to select secondary shift points to maximize fuel economy.

2. Range Inhibited Lamp:

Lamp indicator.

3. Mirror Heater Switch:

This switch turns on the heaters in outside rear view mirrors. The mirror heaters should be used when defogging or deicing is needed. To use the mirror heat, press the switch to the **ON** position.

NOTE: Mirror heat should not be left on unless continuous fogging conditions occur.

4. Mirror Adjust Switch:

To adjust the rear view mirror the small selector in the middle of the switch must be place in the desired side. The middle position is to prevent accidental bumping of the switch and changing the mirror position. The outside mirrors have been placed so that they can be easily adjusted with the Allen wrench. After taking delivery of the new motorhome it will be necessary to sit in the drivers seat and adjust the mirrors to driver's needs. Both the driver and the passenger side mirrors should be adjusted. Adjustments to the mirrors can be made with little effort, using your hand.

Care and Cleaning:

After completely washing the motorhome (including the mirrors) with hot water and soap, clean the outside mirrors with a good quality glass cleaner.

NOTE: Do not use anything abrasive on the mirror or the outside of the mirror.

5. Battery Boost Switch

In the event the motorhome chassis battery has been drained and cannot start the engine, this switch momentarily "jumps" the auxiliary battery to the motorhome domestic battery to assist in starting the engine.

6. Engine Brake Switch

This switch activates the control solenoid for the engine brake system.

7. Idle Up/Down Switch

This switch will increase and decrease the engine idle in 25 rpm increments. There are limits to the idle speed, about 700 to 875 rpm.

8. Cruise Control Switch

This switch provides the capability of foot off the accelerator drive operation. The cruise control circuitry is incorporated in the ISB engine and controlled by the Cummins Electronic Control Module (ECM). Do not use in heavy traffic or severe weather conditions. Control of the motorhome can be lost.

9. Set/Resume Switch

This switch establishes the parameters for which the cruise module will operate. Once the parameters are established they will remain in effect until either the cruise switch is turned **OFF**, or the ignition key is turned **OFF**. The Cruise Control and Set/Resume switches are used together to provide cruise operations and can be used to control idle operations. When the Cruise is on and the Resume is pushed momentarily, the idle will jump to 200 rpm. If the Resume is pushed a second time, the idle will max out at 1,300 rpm. This is the high idle function. Both operations are cancelled when the service brake is applied. The Set switch, when pushed while driving, will store the parameter for use by the EMC. After a service brake application, speed can be restored by briefly pushing Resume. If the cruise operations are in effect, holding down the Resume switch will cause the ECU to increase the parameters.

Air Dump Switch:

Located the left side of the dash console. Will manually dump air from the air bags. May be an aid in leveling the motorhome. Releasing the air from air bags will give the leveler more range of travel for leveling.

NOTE: Never drive the motorhome with the air bags deflated. This may damage the motorhome.

Headlight Switch:

Pull one click to operate the parking lights. Pull two clicks to operate the headlights. Rotating the headlight switch clockwise will dim the dash lights. Counterclockwise rotation will illuminate the map light in the overhead compartment.

Daytime Headlight System/CSA Standard:

The Hamsar Daytime Running Light (DRL) module is a solid state component which is installed on all CSA (Canadian Standard Approved) motorhomes. The daytime running light module operates only the low beam elements at 50% of their normal rated voltage to prolong bulb life. The module activates the headlights low beam when the ignition key is turned on and the park brake is released. Tailights and clearance lights are not illuminated when the DRL module is activated. The headlight switch will deactivate the DRL module resuming normal headlight/taillight operation.

Wiper/Washer Switch:

This is a multi-function switch which controls the speed and delay of the wiper motor. Push the control to activate the washer pump motor.

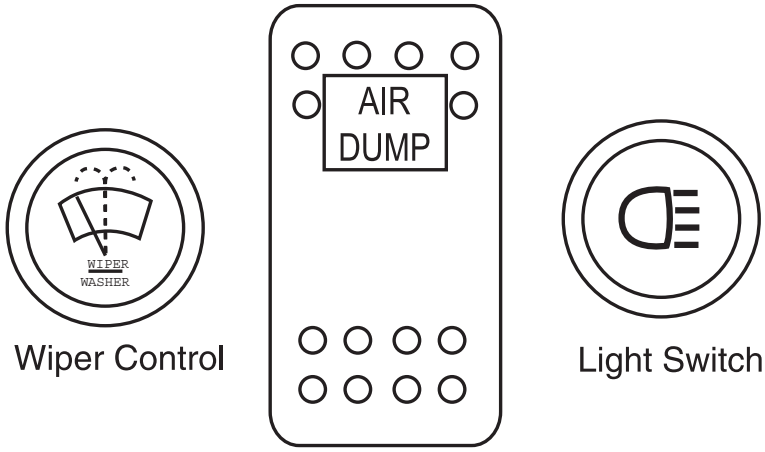

Leveling Panel:

This control panel is for remote operations of hydraulic leveling system. The module consist of four rocker switches and three indicator lamps. Rocker switches are three position spring loaded switches.

The center position is neutral or **OFF**. The up position is used for the extend functions. The down position is for the retract functions. Switch 1, 2, 3 control movement of the leveling jacks. Switch 4 is for power and retracting all leveling jacks.

- **Green** light indicates power is **ON**.
- **Red** light indicates jack is extended or low fluid level.
- **Amber** light indicates all jacks are retracting.

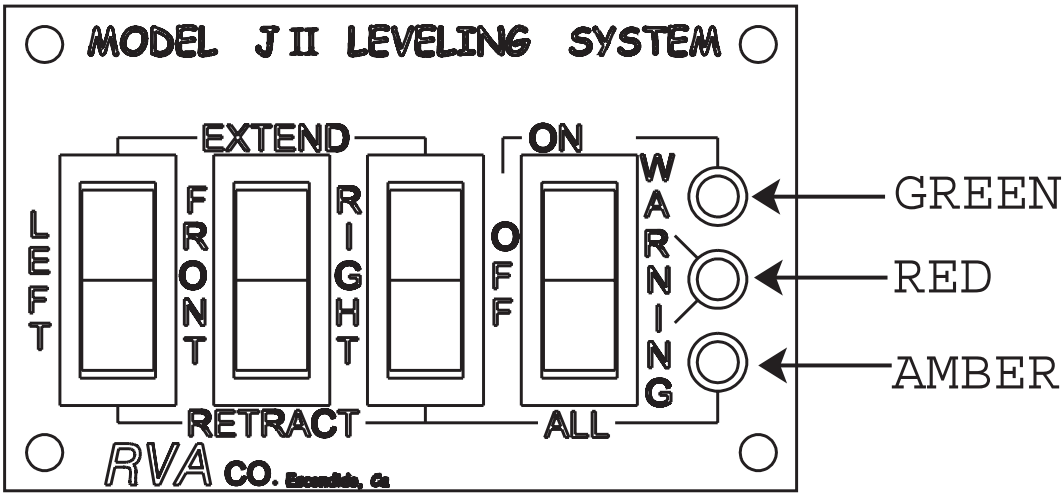

Parking Brake

The parking brake system is activated when the push-pull control knob (located on the drivers left console panel) is pulled. When the knob is pushed, the brake is released. Prior to driving, allow time for the air compressor to build up sufficient air to shut off the air warning lamp.

WARNING: If the air tank is not dumped, there is the possibility of an accidental release of the parking brake. Traveling with small children and/or pets may require a small block to be fabricated to prevent accidental release. The block should be placed under the knob and rested on the dash panel. A wooden clothes pin clasped at the base of the shaft will work.

Air Conditioner & Heater Controls

The system is designed to only provide heating, cooling and defrost capabilities for the pilot/co-pilot area only. The system is not capable of heating or cooling the entire motorhome.

Blower Operation:

The blower is selected automatically when the desired feature is selected with the "select switch." The system is shut off by placing the mode control switch in the **OFF** position.

A/C Operation:

The A/C dash system will operate in all modes except **VENT**, **FLOOR**, and **OFF**. The **A/C** and **MAX** positions engage the A/C compressor. When the switch is positioned in the **A/C** mode, fresh air is drawn through the front air intake of the unit through the A/C coil. In the **MAX** position, a damper door closes off the fresh air, while another door opens to permit only air from inside the coach to be used. When maximum cold air is desired, this position should be selected. Also use this position when you do not wish to introduce outside air into the coach.

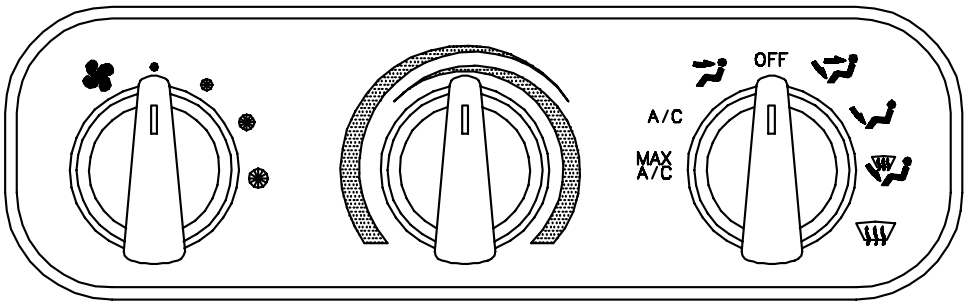

Blower Speed Control *Temperature Control* *Mode Control Switch*

Air Distribution Switch (Mode Control):

This switch is used to direct air where it is needed to maximize the comfort of the motorhome.

MAX A/C - Recirculated air is drawn from the passenger area and discharged through the dash louvers.

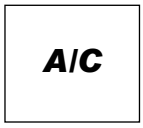

A/C - Fresh Air is drawn from outside into the system and discharged through the dash louvers.

VENT - Fresh air is drawn in and discharged throughout the dash and defrost louvers.

OFF - The blower motor does not operate. The fresh air inlet door will close, minimizing outside air infiltration into the the motorhome.

BI-LEVEL - Fresh air is drawn in and discharged through the dash, floor and defrost louvers.

FLOOR - Fresh air is drawn in and discharged through the floor louvers. A small amount of air is used to defrost the windshield.

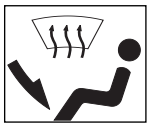

MIX - Fresh air is drawn in and discharged through the floor and defrost louvers. The A/C system operates to dehumidify the discharged air.

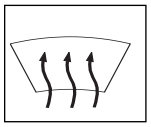

DEFROST - Fresh air is drawn in and discharged through the defrost louvers. The A/C system operates to dehumidify the discharged air.

Temperature Control Switch:
This switch controls an electric water valve regulating the amount of engine coolant passing through the heating and cooling coils in the system. Rotating to the red area provides warmer air. Rotating to the blue area provides cooler air.

Blower Control Switch:
This switch controls the speed of the blower motor. This is one of the best and most effective ways of controlling the temperature. The switch will provide four speeds in all modes except **OFF**.

Operating Tips:
Air intake and discharge temperatures are greatly effected by ambient temperature and relative humidity. A large amount of cooling capacity is used to dehumidify air as well as cool it. After three to five minutes of A/C operations, the discharged air temperature should be approximately 30º F cooler than the fresh or recirculated air entering the A/C system.

Winter Use:
De-ice the windshield using the **DEFROST** mode. Air will heat up faster with a slower blower speed until normal operating temperature ranges are reached.

Summer Use:
Close all windows and vents to hot, humid outside air. **MAX A/C** and **HI** blower will provide quick cool down. Lower blower speed will produce cooler air.

Troubleshooting:

This dash A/C Heat system uses a combination of compressed air (developed by the chassis system), vacuum air (developed by a small vacuum generator) and electric relays and vacuum switches. Therefore, any repair can be classified in one of five categories.

• Electrical • Vacuum • Air Conditioner • Heater • Defroster

The motorhome compressed air tank must have adequate pressure to operate the vacuum generator or damper doors will not function. Also, the dash A/C Heat unit must be switched to **ON** to provide electric current to the relays, vacuum switches, etc. The dash A/C and heater system should be used monthly to keep the compressor lubricated.

The following information is provided to assist in troubleshooting common operational problems which may occur.

No Heating:

1. **A/C** switch is turned off.
2. Blower switch is turned on.
2. Verify the proper engine coolant level.
3. Verify that the engine is reaching operating temperature.
4. Verify engine coolant is reaching water valve attached to unit.
5. Verify operation of water valve to permit engine coolant to pass through valve to heater core.
6. Check unit fuses.
7. Check power supply to water valve and grounding.
8. Check wiring.
9. Engine thermostat faulty.

No Cooling:

1. Check blower is operating, **A/C** switch is in **A/C** or **Max** position, temperature control is turned to max cooling (blue area).
2. System fuses are not blown.
3. Condenser fan is operating.
4. Check power supply to unit and grounding of system.
5. Check wiring.
6. Coolant valve leaking.
7. Drive belt loose or broken.
8. Compressor Clutch inoperative, will not engage.
9. Expansion Valve faulty or frozen.
10. Thermostat control faulty.
11. Mode control switch faulty.
12. Compressor faulty.
13. Loss of refrigerant.

Reduced Cooling:
1. Coolant valve not operating correctly.
2. Air passages obstructed.
3. Loose or worn drive belt.
4. Check blower and select switch.
5. Thermostat control valve faulty.
6. Expansion valve faulty.
7. Compressor faulty.
8. Low refrigerant charge.

Blower Does Not Operate or Runs Slow:
1. Check fuses.
2. Check for loose or corroded connection.
3. Check wiring.
4. Check ignition switch is **ON**.
5. Check blower and select switch.
6. Is the motor shaft seized?
7. Is the blower wheel out of alignment?

Damper Doors Do Not Operate:
1. Does motorhome air tank have pressure?
2. Check vacuum generator is being powered and producing vacuum.
3. Check vacuum line entering unit for vacuum.
4. Check that the vacuum solenoids mounted on unit are receiving power from the mode switch. If operating properly, the vacuum solenoid will feel hot if current is engaging the solenoid.
5. Check mode switch.
6. Check wiring.
7. Check for pinched vacuum line leading to the vacuum motor operating the damper door in question.

REAR VIEW SYSTEM
- Monitor Controls

The system is designed to provide the driver with a view of the rear of the motorhome. The field of view is 140º in the diagonal plane, 121° in the horizontal plane, and 90º in the vertical plane. Power will be supplied to the system when the ignition key is turned to the Accessory or **ON** position. The **green** LED will illuminate. The display on the monitor is controlled by the position of the power switch. When in the **ON** position, display is present. When placed in the **S/B** (Standby) position, display is off until the gear shift lever is set to Reverse.

Power Switch:
The switch, when **ON** (IN) position, turns on the monitor for viewing. The **green** LED indicator will illuminate. When the switch is **OFF** (OUT), the monitor is in a standby mode of operation. The **green** LED will remain illuminated when the ignition is **ON**. The monitor will display rear viewing when the transmission is shifted to Reverse.

Camera Selector:
This switch should be left in the **CA1** (OUT) position. **CA2** (IN) position is not used in the motorhome.

Day/Night Switch:
This switch should be left in the **DAY** (OUT) position for normal viewing. When set in **NIGHT** (IN), picture brightness is reduced. **NIGHT** should be used for night viewing and driving through tunnels.

Bright Control:
Clockwise rotation will increase the picture brightness. Counterclockwise rotation will decrease the picture brightness.

Contrast Control:
Clockwise rotation will increase the picture contrast. Counterclockwise rotation will decrease the picture contrast.

Audio Control:
Clockwise rotation will increase the volume level. Counterclockwise rotation will decrease the volume level.

The camera angle may be adjusted to display a suitable rear view. The camera housing cover will need to be removed to gain access to the hexagon mounting bolts. The mounting bolts can be repositioned to the desired angle. Refasten the camera housing cover and seal using an appropriate sealant.

DIAGNOSTIC PLUG LOCATION

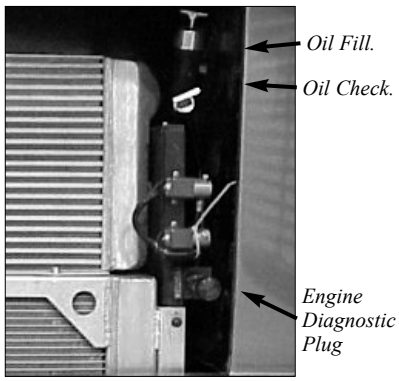

The engine maintenance checks and fills can be accessed through the rear access doors. The doors swing open allowing access to compartment. When fully opened, the doors will lock in place. To release, the small metal button must be pressed when closing the door.

NOTE: Engine oil may also be added from the bed access compartment inside the motorhome.

STEERING WHEEL
Tilt & Telescope

The tilt and telescope steering wheel control lever is located on the steering column.

- To tilt the steering wheel, pull the lever up. Tilt the steering wheel where you want it. Release the lever and it will lock the steering wheel in the new position.

- To telescope the steering wheel, push and hold the lever down. Push down or pull up on the steering wheel until the wheel is where you want it. Release the lever and the steering wheel will lock in the new position.

Turn Indicator Lever/Headlight Dimmer

Turn indicator and headlight dimmer control lever is located on the steering column.

- Pushing the lever forward will activate the right turn indicator circuits when the ignition is on.

- Pulling the lever down will activate the left turn indicator circuits when the ignition is on.

- Pulling the lever up will select high/low beam circuits when the headlights are on.

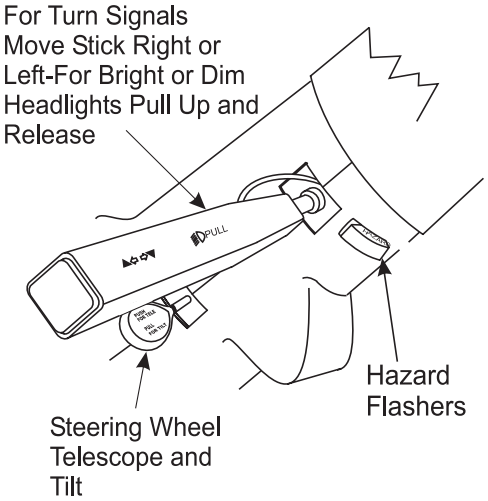

Hazard Flasher

The flasher button is located on steering column.
- To turn four way flasher on, pull out on flasher button.
- To shut off flasher, push button in.

FUSES & CIRCUITS - CHASSIS

The front electrical panel is located on the roadside, ahead of the front wheel. It contains the fuses, self resetting supply circuit breakers, solenoid and relays.

There are two types of fuses used: “ATC” and “ATO.” Both are a blade style fuse. The ATO fuses are the larger style fuse located in the front distribution panel (big fuse box). The ATC fuses are located in the two fuse boxes below the front distribution panel (FDP).

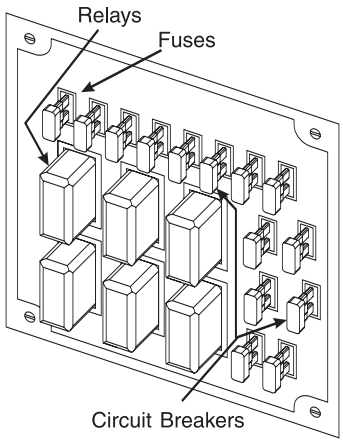

It is recommended that you carry spare fuses of both types, which can be purchased from auto parts stores. Should a fuse blow, it is visible when the fuse is pulled and looked at. The wire in the middle of the plastic fuse will be broken.

Bad or blown fuses must be replaced with the same amperage rated fuse and type. Replacing the fuse with a larger amp rating can damage the electrical system, the item it is operating or start a fire. If the fuse continues to blow, do not attempt to keep replacing the fuse. This is an indication there is a malfunction in the system, item or wiring. Have the problem diagnosed and corrected by a qualified technician. A fuse description label is located on the panel or lid of the fuse box.

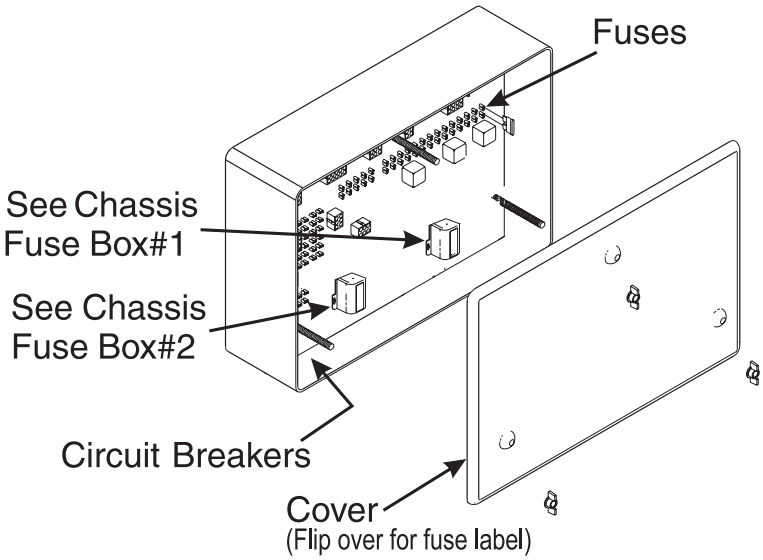

Front Distribution Panel

ALTERNATOR

The alternator is designed to convert mechanical energy produced from the engine, and convert the mechanical energy into an electrical energy. The electrical energy is first internally generated in the form of an AC voltage. The AC voltage is then passed through a diode bridge to rectify the voltage to a DC voltage level. The DC voltage level is used to maintain a proper level of voltage for operating the motorhome. The alternator is designed to operate at 12 Volt DC with a maximum output of 160 Amps.

Features:

- Enclosed brushes.
- Directional fan design.
- Lightweight compact construction.
- Simple two wire connection (B+ and B-).
- One terminal for Tachometer (AC).
- One terminal for Dash warning lamp (L).

Checkout Procedure

- The output of the alternator range is 13.5 to 14.2 Volt DC. Connect a voltmeter to the (B+) terminal of the alternator and chassis ground. Idle the engine up to 1,200 rpm.
- Check all wiring for burnt or loose connections. Repair as needed.
- Check all grounds and connections to ensure they are clean and tight.
- Inspect the alternator for damage. A broken fan blade can damage an alternator or make it out of balance.
- Check belt, pulley and fan for wear. Replace as needed.
- Never attempt to disconnect the battery or battery wire from the alternator with the engine running. This can cause damage to the alternator or the regulator.
- The pulley for the alternator should be torqued to 80 foot pounds.

Remember the alternator is not a battery charger. It is designed to maintain the proper operating voltage level for the motorhome. A battery with a low charge or a dead battery may cause damage to the alternator.

BULB USAGE CHART - EXTERIOR

EXTERIOR BULB CHART	
LOCATION	**BULB NUMBER**
Headlight - High/Low	**9006**
Headlight - High	**9005**
Front Turn (2)	**194**
Tail/Brake Light	**1157**
Turn Signal	**1156**
Corner Marker	**194**
Overhead Clearance	**194**
Third Brake Light	**562**

NOTES

10

INTRODUCTION

This section contains knowledge and information on various components of your motorhome chassis. Following the guidelines and procedures will help in understanding and operating the motorhome. Complete instructions for various components can be located in the operator's manual included in the Owner's Information File box.

WARNING: When frame or other welding is involved for motorhome repair or modification the following precautions are required to protect electric components in the motorhome chassis.

1. **Disconnect the (+) positive and (-) negative battery connection and any electronic control ground wires connected to the frame or chassis.**
2. **Cover electronic control components and wiring to protect from hot sparks.**
3. **Disconnect the wiring harness connectors at the transmission electronic control unit.**
4. **Do not connect welding cables to electronic control components.**
5. **The welding ground cable should be attached no more than two feet from the part to be welded.**

CHASSIS

The Roadmaster chassis has been designed to provide exceptional balance, handling and braking characteristics. The rear engine chassis is an engine and frame unit featuring a C-channel ladder rail frame design, providing greater structural integrity and more uniform stress distribution. Incorporated in the Roadmaster chassis is the Neway air suspension system using mounted air bags and shock absorbers. The chassis is equipped with a three-point hydraulic leveling system. The setup and design of the chassis provides a smooth ride with trouble-free service, while delivering top drivability.

TOWING CAPACITY

The towing system incorporated in the construction of the frame is rated at 4,000 lbs. towing and 400 lbs. tongue weight. The optional hitch rating is 5,000 lbs. towing and 500 lbs. tongue weight.

Suspension

The Neway air suspension system uses air drawn from an air system to pressurize the air bags. The height control valves regulate the air pressure required for varying loads and maintains ride height. The suspension can provide a cushioned ride throughout the load range. It will also provide excellent side to side and axle to axle, which helps equalize and control braking.

AIR SUPPLY SYSTEM

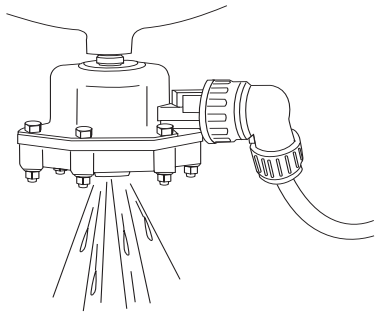

Air Purge Valve.

The chassis uses a single, dual chamber, air storage tank mounted between the C-channel rails forward in the chassis. The tank is rated at 1900 cubic inches with a maximum capacity of 150 psi. **Air is supplied to the air tank from a compressor that is part of the ISB engine. The air governor is set to maintain air pressure between 105 and 120 psi.** The tank is equipped with a pop valve, manual drain and automatic drain valve. The manual drain is located on the DRY side of the tank. The pop valve and automatic drain valve are located on the WET side. The pop valve is designed to release pressure in the tank when the pressure exceeds 130 psi. The automatic drain valve wired to the brake light circuit will activate each time the service brakes are applied, with the ignition switched to ON. Only a small amount of air/water is expelled. The momentary release of air/water from the tank is audible. Color coded air lines help identify air system malfunctions. The air tank should be drained every 30 days. **The low air lamp will only illuminate when a low indication is present. You should check the operation of the low air lamp when the air tank is drained.** The air tank should be left open using the manual drain until all air has escaped. An additional five minutes will permit the moisture to escape. The air tank will provide air to the air bags, height control valves, parking brake and step slide cover. The air system is monitored by a low pressure air switch connected to a lamp indication on the dash console.

COLORED AIR LINE	SYSTEM USAGE
Orange	Low Air Switch
Black	Height Control Valves, Front Dump Valve, Step Slide
Blue	Rear Dump Solenoid, Park Brake Valve
Red	Park Brake Valve, Vacuum Generator
Yellow	Turbo Boost Gauge
Green	Exhaust Brake System (Jacobs)
Silver	Air Governor

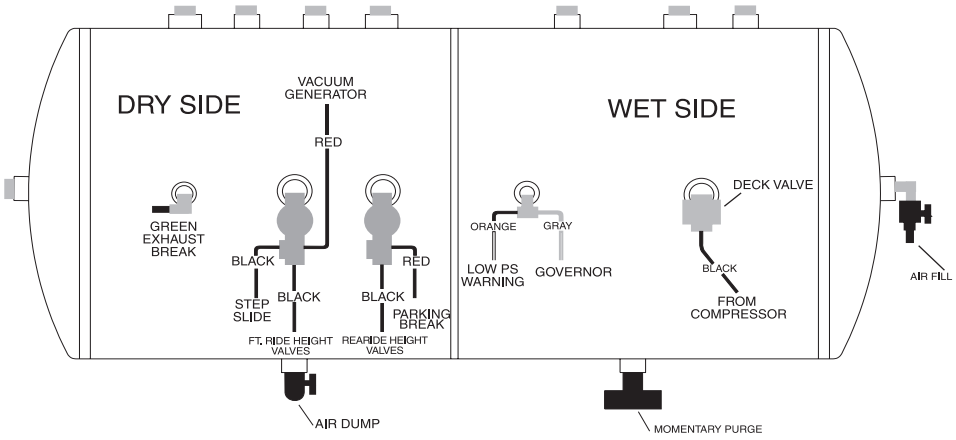

SUSPENSION

The Neway air suspension system uses air drawn from an air system to pressurize the air bags. The height control valve regulates the air pressure required for varying loads and maintains ride height. The suspension can provide a cushioned ride throughout the load range. It will also provide excellent side to side and axle to axle, which helps equalize and control braking.

Each axle has two Firestone air bags and two Monroe shocks to provide the smoothest ride, best handling and top notch drivability. The suspension control arms bushing require no lubrication. The suspension ride height is preset and will maintain proper ride height automatically throughout the load range. Improper ride height adjustment could result in a poor ride or damage to the suspension, thus leading to erratic coach handling. The air bags, shock absorbers, control valves, and link assemblies should be visually checked as part of pre-trip and safety inspections. This should be done on a level surface, allowing two minutes after the low air lamp extinguishes.

Checklist - Periodic Maintenance

Items that can be checked when the motorhome is in for periodic maintenance are listed below.

NOTE: Never attempt to service the air suspension on a motorhome with the air bags inflated.

- Inspect the O.D. of the air springs. Check for signs of irregular wear or heat cracking.
- Inspect the air lines to make sure contact does not exist between the air line and the O.D. of the air springs. Air lines can rub a hole in an air spring very quickly.
- Check for sufficient clearance around the complete circumference of the air spring while at its maximum diameter.
- Inspect the O.D. of the piston for buildup of foreign materials. (On a reversible sleeve style air spring, the piston is the bottom component of the air spring.)
- Correct ride height should be maintained. The specified ride height has been established and set at the factory. This measurement can be checked with the vehicle loaded or empty.
- Leveling valves (or height control valves) play a large part in ensuring that the total air spring system works as required. Clean, inspect and replace if necessary.
- Check shock absorbers for leaking hydraulic oil and a worn or broken end connector. If a broken shock is found, replace it immediately. The shock absorber will normally limit the rebound of an air spring and keep it from overextending.
- Check the tightness of all mounting hardware (nuts and bolts). If loose, tighten. Do not over-tighten.

Steering Axle

5,000 mile inspection (initial):

Bolts and nuts for proper torque; suspension ride height within 1/4”; air bags for equal firmness.

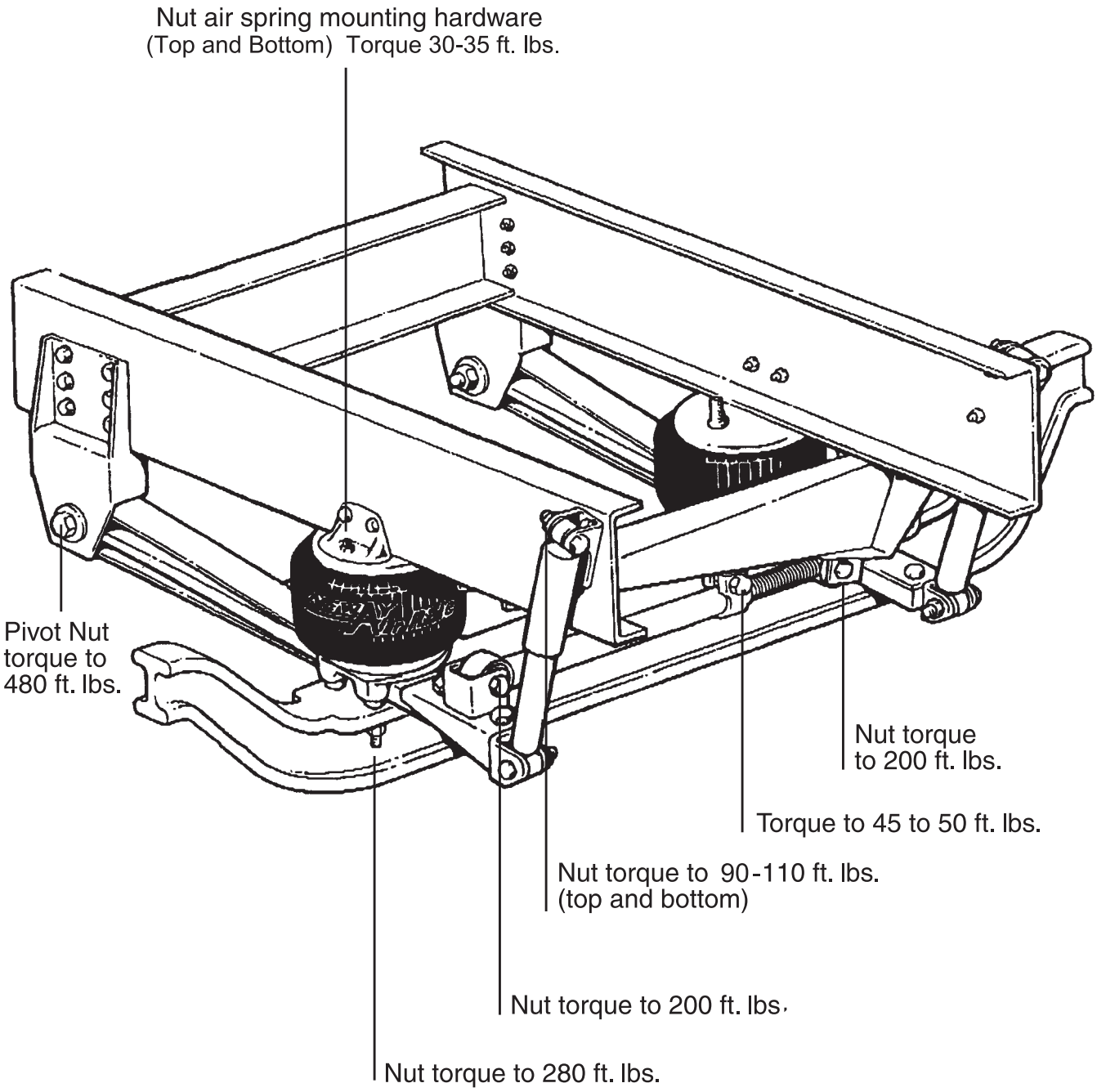

50,000 mile or one (1) year:

Same as the 5,000 mile. Also, all other suspension components for any signs of damage, looseness, wear or cracks.

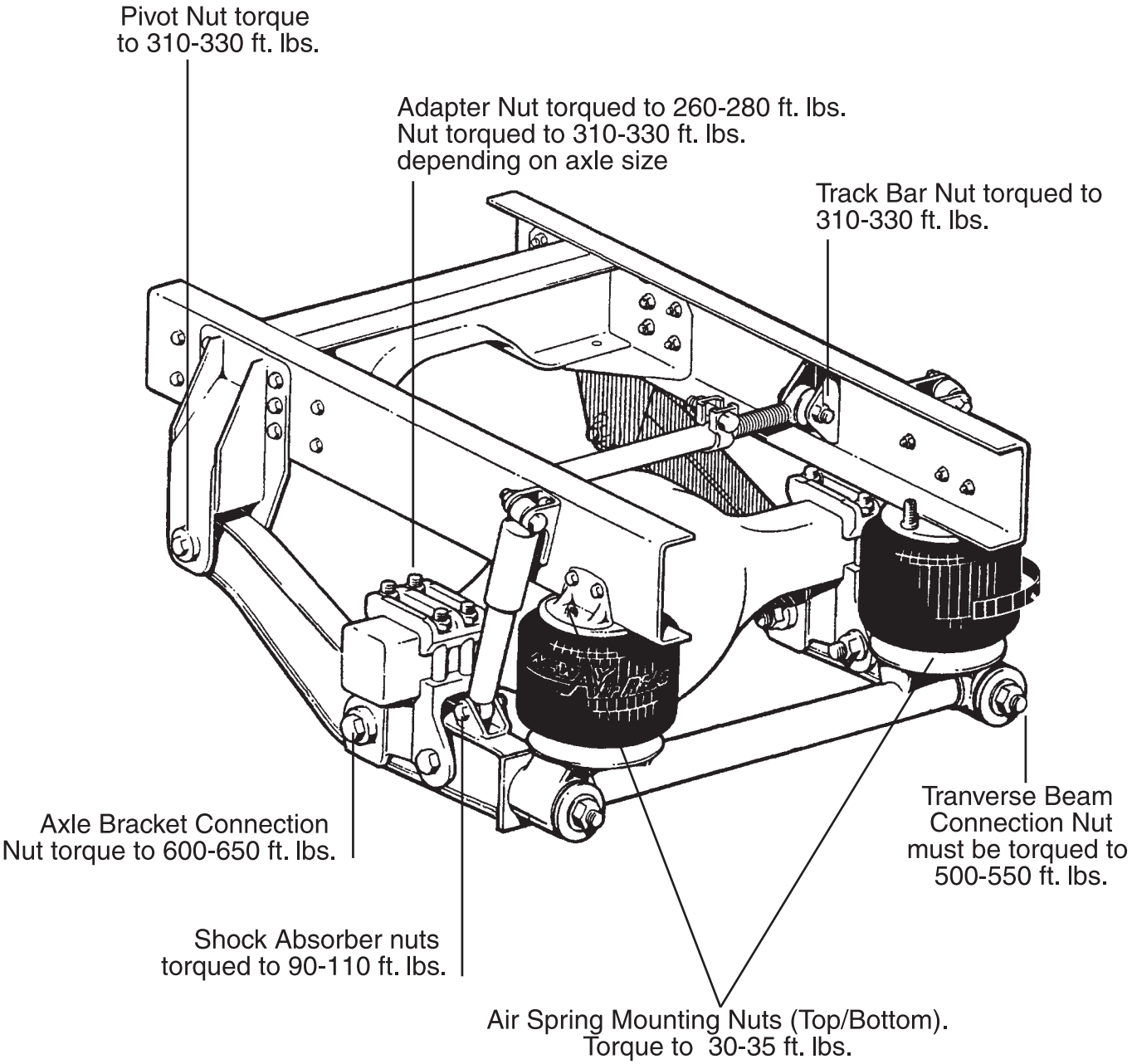

SUSPENSION - AIR RIDE BAGS

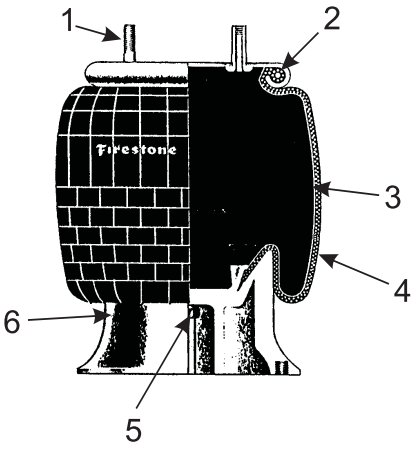

Air Spring (Bag).

Air ride springs, referred to as air bags, are the Firestone single convolution type.

1. **Stud:** Manufactured as a permanent part of the bead plate assembly for maximum strength and durability. Used to attach the spring to the vehicle's suspension.
2. **Bead Plate:** Crimped onto the bellows at the factory for a durable design and maximum quality control. Allows 100% leak proof testing prior to shipment.
3. **Bellows:** "Air bag" includes four plies of material: an inner layer, two plies of cord-reinforced fabric and an outer cover. Natural rubber construction provides functional properties to -65º F.
4. **Bumpers:** A solid rubber or engineered plastic device designed to prevent significant damage to the vehicle, or suspension in the event of a sudden loss of air pressure in the spring.
5. **Piston:** Provides a lower mounting arrangement for the air spring. Controls characteristics of the spring under changing pressure loads.
6. **Piston Bolt:** Attaches the piston to the bellows. Sometimes it is extended as a means of attaching the spring to the vehicle suspension.

Cleaning

The approved cleaning method is to use soap and water, methyl alcohol, ethyl alcohol and isopropyl alcohol. Unapproved cleaning methods include all organic solvents, open flames, abrasive and direct pressurized steam cleaning.

Ride Height Adjustment

The chassis has three height control valves. The drive axle suspension ride height is the distance from the underside of the C-Channel Rail to center line of the axle. Comparing this measurement to the height of the air bag will ensure an accurate adjustment. The steer axle suspension ride height is the distance from the underside of the C-Channel rail to the top of the axle. The air bag height measured from the top plate to the bottom plate should be 10.5". In order to obtain the ride height measurement for the rear axle, measure from the underside of the C-Channel Rail to the center line of the axle. The ride height measured for the drive axle should equal 7.5". Front axle ride height measured should equal 9.5".

NOTE: Ride height has + or - ¼" tolerance.

BRAKE SYSTEMS

The chassis incorporates four separate braking systems: The Primary Brake System, the Parking/Emergency Brake System, the Antilock Braking System (ABS) and the Engine (Exhaust) Braking System. The Primary Brake System uses a hydraulic brake actuation system. This system includes a hydraulic booster assembly, a master cylinder assembly and a monitoring system. A reserve electric hydraulic pump is included as a safety feature to provide limited power assisted stops should the primary system fails.

The Hydro-Max brake system gets primary power for the booster from the power steering pump. The reserve electric motor pump is turned on by a relay which is activated when an integral flow switch detects the lost flow of power steering fluid. The brakes will remain operational with a greatly increased stopping distance in the event that both the primary hydraulic and the backup electrical pump fail to operate.

BRAKE - PARKING & EMERGENCY SYSTEMS

The parking brake system is activated when the push-pull control knob (located on the drivers left console panel) is pulled. When the knob is pushed, the brake is released. Prior to driving, allow time for the air compressor to build up sufficient air to shut off the air warning lamp.

BRAKES - ABS SYSTEM *(Anti-lock Brakes)*

The Hydraulic Antilock Braking System is an electronic wheel speed monitoring and control system. The Electronic Control Unit (ECU) receives and processes signals sent from the wheel sensors located on each of the wheels. The ECU will process the signals and generate the commands to the solenoid control valves housed in the Modulator Assemble used to control the brake pressure. This process commences when the wheels begin to lock. The rapid valve operations may even be noticed in the brake pedal.

The ABS indicator light located on the dash will alert the driver to possible system faults and is used by service personnel to assist in troubleshooting. In the event the ABS indicator light remains illuminated, the motorhome brake system may not be affected. However, continue to drive at a reduced rate of speed to the nearest repair facility.

BRAKES - EXHAUST BRAKE SYSTEM

The exhaust brake, located in the exhaust system of the engine, is designed to supplement the primary hydraulic braking system. Various features and benefits are obtained with this application. Attached directly to the engine turbocharger, the exhaust brake is activated when the dash switch at the drivers console is switched “ON” and the throttle is “RELEASED.” The exhaust brake will not disengage the cruise control. This must be

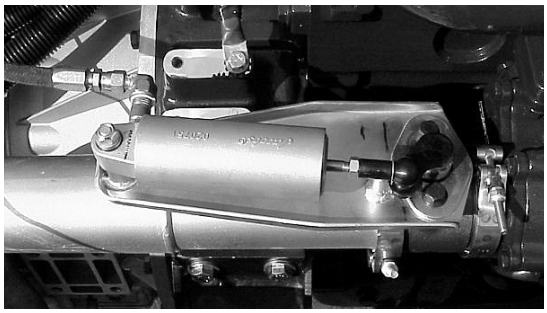

Exhaust Brake.

accomplished by tapping the service brake pedal. The amount of braking power developed, which is applied to the drive wheels only, is relevant to the engine speed (RPM). A butterfly plate inside the brake moves to restrict the flow of exhaust gases, causing an increase of back pressure in the engine. The increase of back pressure slows down the engine and creates an increased control in the coach braking performance. The slowing power reduces the use of the service brake and results in a service brake conservation. The exhaust brake is not a substitute for the service brake and cannot stop the coach completely. It can, however, be used continuously on steep downhill grades or long freeway off ramp. Use of the exhaust brake system allows the engine temperature to drop while going downhill. The exhaust brake should be turned off prior to starting the engine and when the engine is left idling for long periods of time.

CAUTION: Use of the exhaust brake on wet and slippery surfaces can result in overbraking and loss of traction.

When the exhaust brake is activated, the sound of the engine may vary and the slowing effect may or may not be felt. Once deactivated, normal throttle response with a slight change in RPM should occur.

Maintenance

The exhaust brake system, used routinely at normal exhaust operating temperatures, is virtually maintenance free. Some contributing causes which can result in failures with the exhaust brake include moisture, dirt, carbon and improper usage.

Starting the engine and idling for short periods of time is not recommended. Moisture is created within the engine and the exhaust system during cold start-ups. When normal operating temperatures are not obtained, moisture may get trapped in the valve housing resulting in rust, leading to insufficient operation of the exhaust brake.

Some problems that may be encountered with the exhaust brake include, but are not limited to, will not activate or deactivate, intermittent on/off operations or actuates with the switch off. These are commonly related to electrical symptoms. Slow operations or delays in operations, as well as limited performance, are mechanical symptoms. Refer these problems to the dealer for diagnosis.

BRAKES - MAINTENANCE & TROUBLESHOOTING

The most critical part of the service brake system is bleeding the system. Prior to bleeding the system, ensure all hose clamps, line connector and fittings are tight enough to prevent air from entering the system or fluid from leaking. The hydraulic brake system must be free of air to function properly. When bleeding, check the fluid level in both the power steering reservoir and master cylinder.

NOTE: The power steering system and Hydro-max system are two separate hydraulic systems. The fluids are not compatible and should not be mixed. Mixing of fluids will damage the systems and reduce service life.

NOTE: Do not attempt to move the motorhome in the event any line is disconnected, component removed or part of the hydraulic brake system is opened. There will be no braking capabilities until the affected system is bled.

If power steering fluid is noticed in the master cylinder, End Cap service on the power booster assembly can correct the leak. The Hydro-Max system should be bled prior to the brake system. Applying the brakes will cycle the pump and purge any air from the electric pump system. The engine will need to be started to bleed the booster. When started, applying the brakes two to three times will purge the air from the booster. Inspect fluid levels, add fluid as required.

WARNING: Brake lining may contain asbestos material and should only be serviced by qualified service technicians who are trained in the appropriate precautionary procedures.

Bleeding the System

It is important a supply of clean brake fluid be used during bleeding. Also, maintain the proper fluid level in the reservoir during bleeding. The sequence for opening the bleeder valves is curbside rear, roadside rear, curbside front and roadside front. A clear plastic tube inserted over the bleeder valve can aide in viewing air. Place the other end of the plastic tube in a container to catch the drain. When the valve is opened, observe the flow of fluid. Once a steady flow of fluid is present, close the bleeder valve. Check the fluid level in the master cylinder and repeat the process for the remaining calipers.

Flushing the system requires that the bleeder valve be left open until the fluid appears clear and uncontaminated. The system should be flushed whenever any repair has been performed, ensuring clean and uncontaminated fluid in the system.

NOTE: Do not reuse brake fluid which has been drained as the fluid may be contaminated.

Tires, suspension, wheel alignment and shocks can affect braking performance and should be inspected prior to checking the braking system. Some problems and repairs are listed below:

- Pedal fade is a good indication of leaks in the system. Inspect and repair leaks.

- Sluggish brake response indicates air has been introduced into the system. Bleed the brake system.
- Excessive pedal travel or excessive pedal effort relates to booster and master cylinder.
- Booster doesn't function properly in power or back up mode. Repair the booster and pump assembly.
- Booster works only in the back up mode. Repair the booster assembly.
- Booster works only in the power mode. Repair the back up pump.
- Dragging, grabbing, squealing or pulling brakes require servicing pads and calipers.

ELECTRIC PUMP & MASTER CYLINDER

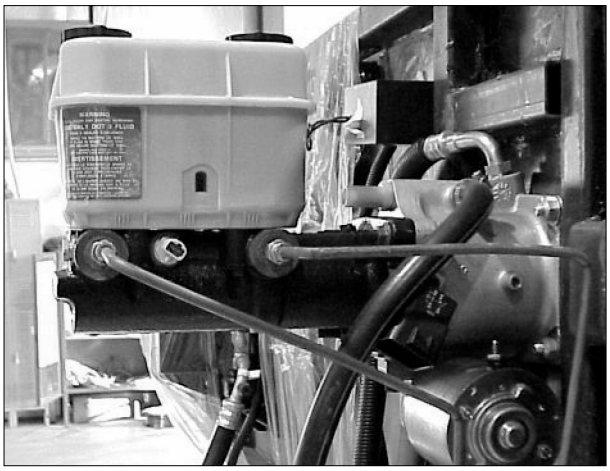

Hydramax right side view.

The electric pump motor is reserve power for the booster assembly. The entire assembly should be replaced when a failure occurs. When the electric pump motor is working you will only have ½ the brake boost. Caution should be taken as braking distance will be increased. The reserve power test is a quick test to ensure that the electric pump motor is operational. You would simply apply the brake pedal with the ignition "OFF." The electric pump should run and be audible.

The design of the master cylinder provides two separate brake fluid systems (front and rear). One system will operate should a failure occur in the other. When checking the fluid level in the master cylinder, the fluid should be clean with no evidence of contamination. A surge of fluid should occur when the brake pedal is applied, and fluid level should be at the bottom of the port ring openings. Since the master cylinder is the highest point of the system, gravity flow bleeding can be accomplished. Gravity flow bleeding requires only one person and NO pressure bleeder. Each caliper has a bleeder valve for removing any air in the system.

BRAKES - AIR OVER HYDRAULIC (Optional)

The brake system on the motorhome is designed to accommodate the weight of the vehicle and towing loads. The air brake system **(not available on 30 or 32 foot models)** is different from the conventional automotive hydraulic brake system and should be treated differently.

When operating a vehicle equipped with air brakes, considerations need to be given to stopping distances and air system pressures. The heavier the

vehicle, the greater the kinetic energy. The motorhome has longer stopping distances than a car. Each brake application uses air from the air system. Engine speed is directly proportional to how fast the air system is replenished. Prepare for downhill grades. Grades are generally posted in percentages. It may be necessary to select a lower gear. Use the exhaust brake.

When making brake applications, use individual short applications down long hills rather than "riding" the brakes. This will extend the life of the brake linings. Avoid overheating the brakes. Hot brakes have less stopping power. When maneuvering the motorhome around in small areas or backing into spaces, several individual brake applications might be made. Plan when parking to make it easier on yourself. When preparing to back into a space, maneuver the motorhome so it is aligned with the parking slot before backing up.

Should a low air condition arise while the vehicle is under operation a dash warning light will illuminate alerting the operator of the situation. This warning occurs at approximately 60-65 psi (pounds per square inch).

A simple mechanical explanation of what occurs when a brake application is made is as follows: The air over hydraulic system uses air from the air tank to operate two air brake chambers. The air brake chambers operate two separate hydraulic master cylinders. The rest of the brake system is hydraulic. One master cylinder operates the front brakes; the other master cylinder operates the rear brakes.

LEVELING SYSTEM
-Hydraulic

The three point leveling system features a multiple warning system with flashing lights and a bong alarm to alert you of the jack position. The system also features a remote control location from the driver seat. The torsion stress is significantly reduced during proper operating procedures. Damage resulting from improper procedures can range from windshield damage to entry doors jamming.

The model 22.5A J-II leveling system pump is located curbside front with easy access from the generator door. The valve assembly manifold is mounted on the the pump motor, providing easy access to the manual retract valves. The system is designed to be self bleeding in the event any component of the hydraulics has been removed or repaired. Fully extend and retract each jack twice. The remote rocker switches will operate with a minimum of 7.5 Volt DC. Optimum requirements for operating the system are voltages above 9.6 Volt DC.

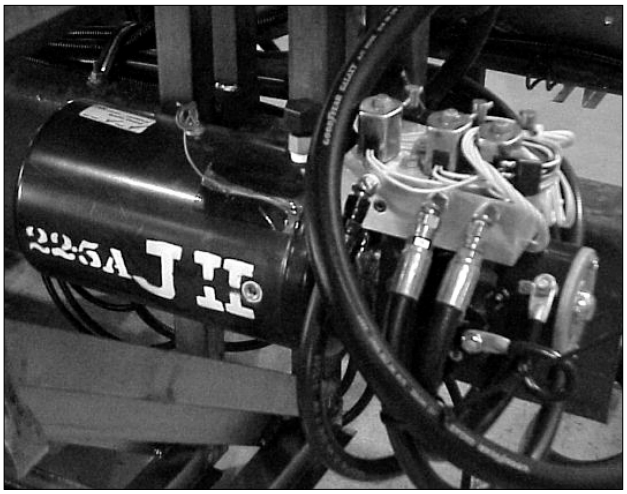

Hydraulic Reservoir.

NOTE: The leveling system jacks are not designed for use in changing tires. This can cause problems with the suspension system, frame alignment and damage to the windshields.

Manual Leveling System

When manually operating the leveling system, always lower the front jack first. The front jack acts as a pivot point for chassis and reduces torsion stress on the body of the motorhome.

NOTE: In the event the front of the motorhome is high and does not require elevating, it will be necessary to raise front of motorhome a minimum of ½ inch to allow jacks to act as a pivot point.

The leveling system was designed to reduce site selection problems. If possible, park the motorhome with the front facing downhill. If the ground is soft, place a wooden 2 X 8 board under the foot of each jack pad to prevent sinking.

The front jack will be the pivot point for the chassis and is always lowered first. This reduces the torsion stress on the body of the motorhome. The Bong alarm will activate when any jack is extended more than 2” to 6” from fully retracted position and will indicate low fluid level for the pump motor. The Bong alarm may momentarily activate when driving over rough roads, or negotiating curves and corners. Usually this indicates low fluid level.

NOTE: Air will not automatically dump from air bags when leveling cycle begins. To expedite the air dumping, a manual air bag release switch is located on the dash panel.

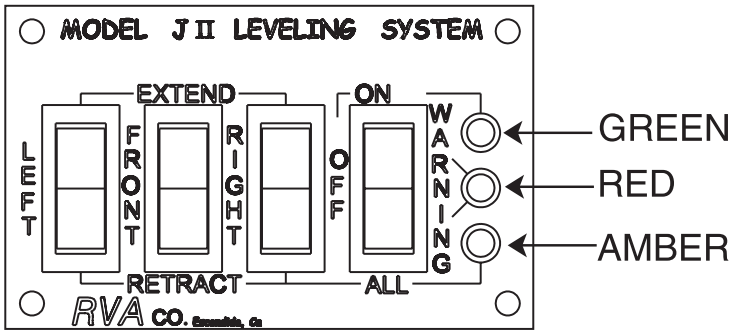

- Place the gear selector in PARK.
- Apply the parking brake.
- Turn the ignition switch to the ON position.
- Switch the main jack control power switch ON.
- To extend a particular jack, push the appropriate rocker switch to extend position and hold it until the desired extension is reached.
- To retract a particular jack, simply push the rocker switch to the retract position and hold until the desired retraction is reached.
- Turn off the switch labeled POWER on the jack control panel.
- Turn off the ignition switch.

Retracting the System

- Ensure the gear selector is in PARK.
- Ensure the parking brake is applied.
- Turn the ignition switch to the ON position.
- For manual control of the system, switch the control panel power switch ON.
- To retract a particular jack, simply push the rocker switch to the retract.
- All jacks may be retracted by selecting the ALL position on the power switch.

NOTE: Do not move the motorhome until the jacks are fully retracted. A visual check of the jacks is recommended to ensure full retraction. Do not rely solely on the lights and alarms.

Manual Retract Valves

In the event of mechanical or electrical failure that would prevent the leveling jacks from being automatically retracted, the motorhome is equipped with manual emergency retract valves. These valves are located inside the front generator access. The manual system will release fluid under pressure in each jack and allow fluid to return to the reservoir. The jacks will then retract.

To operate the manual system, turn all three valves counterclockwise until they stop. Once the jacks are fully retracted, rotate all the valves fully clockwise. In the event one of the jacks is not holding pressure, check to make sure all valves are fully closed.

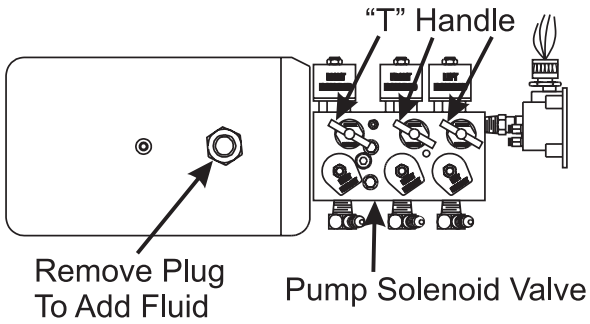

Maintenance

Occasionally, while the jacks are fully extended, wipe dirt from the jack rod. This will help lengthen the life of the jacks. This can vary from the amount and type of usage of the jacks. Dexron III will serve as a solvent as well as a lubricant. Occasional oil or grease on the extended jack ram is normal and aids in the lubrication of the ram. It helps to learn the sound of the normal pumping and gurgling sounds of the pump when it is low on fluid.

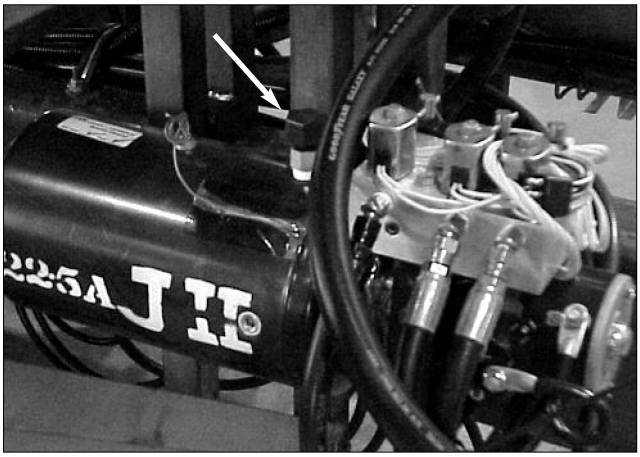

Fill Cap.

Adding Fluid:

1. Use ***Dexron III*** automatic transmission fluid.
2. Extend any jack six inches from the full retracted position. All other jacks should be fully retracted.
3. Unscrew the reservoir cap from the top of the pump.
4. Turn the ignition switch to the **ON** position. Turn the rocker switch to **ON**. Open the window so the bong alarm is audible from outside the motorhome. Slowly fill the reservoir with fluid until the bong alarm stops sounding.
5. Replace the reservoir cap.
6. Turn the ignition switch and the remote panel **OFF**.

ENGINE-INTRODUCTION

The diesel engine operates differently from the conventional gasoline engine. Gasoline engines control engine speed using a butterfly throttle plate controlling air/fuel mixture inlet flow. As the throttle plate opens, vacuum created by the piston velocity draws the metered fuel/air charge into the combustion chamber, then ignited from a controlled electric ignition source. Closing the throttle plate limits the fuel/air supply, slowing engine speed, increasing intake manifold vacuum.

The diesel engine in the motorhome controls engine speed by varying fuel supply only. No throttle plates are used. An exhaust driven turbine system (turbocharger) compresses the fresh air supply into the engine. The fuel is injected under pressure into the combustion chamber. Ignition of the fuel/air charge occurs from heat generated by rapid high compression. The turbo boost gauge registers the amount of intake manifold pressure measured in lbs./in². Therefore, no intake manifold vacuum exists.

Diesel engine RPM (revolutions per minute) operating speeds are generally much lower than that of the gasoline engine. Peak torque and horsepower output values occur at much lower engine speeds. Idle speeds between the two engine types are similar, however maximum engine speeds are quite different. The gasoline engine generally is not regulated to a maximum engine speed. The maximum engine speed on a diesel engine is controlled by an engine speed governor set by the engine manufacturer.

WARNING: Do not operate a diesel engine where there are or can be combustible vapors. Vapors can be drawn through air intake system and cause engine acceleration and over-speeding, resulting in fire, explosion and extensive property damage. Numerous safety devices are available, such as air intake shutoff devices, to minimize risk of over-speeding where an engine (due to its application) might operate in a combustible environment, such as fuel spills or gas leaks. The equipment owner and operator is responsible for safe operation of the engine. Consult an authorized engine repair location for further information.

Maintenance guidelines found in the Cummins Operation and Maintenance (O & M) manual are recommended for the engine. When these guidelines are followed, the engine will have a longer life, better performance and more cost efficient operations. A good maintenance schedule begins with a daily awareness of the engine's various systems.

The engine is equipped with an intake manifold grid heater. The grid heater helps engine starting in cold weather. Intake manifold air temperature is monitored by the Electronic Control Module on the engine. If intake manifold temperature is below specified level (approximately 40º F.) the manifold grid heater will be activated. Grid heater activation is indicated by the **WAIT TO START** indicator lamp.

WARNING: Use of ether starting fluids may cause an explosion upon grid heater activation.

ENGINE STARTING PROCEDURE

With the throttle in an idle position, turn the ignition to the ON position allowing the **WAIT TO START** lamp to extinguish. Turn the key to the **START** position. When the engine is started, the grid heater will again energize for a time period determined by the intake air temperature and fuel temperature. Allow the engine to idle with no load for three to five minutes. The engine coolant temperature should be up to normal operating range (140º F/60º C to 212º F/100º C) before operating the engine under full throttle.

NOTE: It is not recommended to idle the engine for long periods of time as this wastes fuel. Consistent periods of long idle may cause damage to the engine.

STARTING PROCEDURE - COLD WEATHER

The engine block heater may need to be plugged in two to three hours prior to starting. The engine block heater is rated at 1,500 watts, 110 Volts AC and requires the motorhome be plugged into shore power or have the generator running. It is not necessary to leave the block heater plugged in for long periods of time. The block heater requires about 13 Amps to operate.

OIL RECOMMENDATIONS (ENGINE)

The maintenance guidelines found in the Cummins O & M manual is recommended for the engine. When followed, it will help with a longer life, better performance and more cost efficient operations. A good maintenance schedule begins with a daily awareness of the engine's various systems.

A high grade 15W-40 multiviscosity heavy duty lubricating oil meeting Cummins Engineering Specification CES 20071 or CES 20076, American Petroleum Institute (API) specification CH-4 which can be used as an alternative to CES 20071 is recommended. Lubricating oils meeting API CG-4 specifications may be used at a reduced drain interval. Holiday

Rambler uses Pennzoil 15W-40 heavy duty engine lubricating oil that meets Cummins specifications. A critical factor in maintaining engine performance and durability is the use of high grade multigrade lubricating oil and strict adherence to the maintenance service intervals.

A straight weight or monograde lubricating oil is not recommended. Shortened drain intervals may be required as determined by a close monitoring of the lubricating oil condition by means of a oil sampling program. The use of oil analysis to extend drain interval is not recommended. There are numerous variables which is the basis of the recommendation.

Synthetic oils API category III specifications are recommended for extreme cold temperatures only. Low viscosity oils used for winter operations will aid in starting. Synthetic oils or oil with adequate low temperature properties used for Arctic operations, where the engine can not be kept warm when shut down, will aid in starting.

The use of synthetic oils should not be used to extend drain intervals. Extended oil change intervals can decrease engine life and possibly affect the engine warranty.

Oil additives should not be used unless the oil supplier or oil manufacturer has been consulted and provided positive evidence or data establishing satisfactory performance in the engine.

Function of Engine Oil:

If a lubricating oil is to work in an engine it must be capable to perform various functions. Lubrication of the moving parts is the primary function. The lubricating oil should be able to form a film between metal surfaces preventing metal to metal contact and reducing fiction. When you have a metal to metal contact, fiction heat is generated. Welding of the part can occur and metal transfer will result in scuffing or seizing. The film of oil contacting the surfaces will provide cushioning and shock dampening as well.

Cleaning is another function. The oil should perform as a cleaner in the engine by flushing contaminates from critical components. These contaminates should be removed in the filtration system or during the course of an oil change. Oil will provide a protective barrier to prevent corrosion of non-like metals.

Internal components of the engine require cooling. The primary coolant system cannot provide this cooling. Oil will transfer heat by contacting the various components then transferring to the primary cooling system at the oil cooler. The uneven surfaces are filled to react as a combustion seal within the cylinder liner and other internal components.

Synthetic Engine Oil:

Extreme environments where ambient temperatures can be as low as -45º C (50º F) a petroleum based oil will not perform satisfactorily in diesel engines. Synthetic oils were developed for this type application. The synthetic oils are blended from ester and/or hydrocarbon based oils. These base oils

are produced by chemically reacting lower molecular weight materials to manufacture lubricants of desired properties. All synthetic based oils must meet the API category III classifications and SAE viscosity grades. Synthetic oils and petroleum based oils should never be mixed.

Viscosity:

Viscosity is simply a measure of resistance of molecule layers moving relative to an adjacent layer. All fluid viscosity are affected by temperature. A multigrade lubricating oil tends to be less sensitive to temperature changes due to their formulation. Lubricating oils are generally selected for use with viscosities appropriate for the expected operating temperature. The correct selection of a lubricating oil of correct viscosity is critical for optimum performance. Some effects of incorrect viscosity when the oil is too thick range from difficulty in starting to increased fuel consumption and reduced power output. When the oil is too thin, oil consumption is increased as well as wear from the metal to metal contact. This will also increase engine noise.

Low temperature viscosity specifications are identified by a “W” (winter). High temperature viscosity that meets the 100º C (212º F) requirements have no suffix. When a lubricating oil meets both high and low temperature requirements they are classified as multi-viscosity or multigrade.

Routine Maintenance Recommendations:

1. Check oil level daily.
2. Replace oil filter at every oil drain interval.
3. Cummins Engine Company, Inc. recommends the use of high quality, API (American Petroleum Institute) licensed CH-4 or CES20071, 15W-40, multiviscosity oil or premium oil.
4. The recommended oil drain interval is defined by the API oil performance classification and the engine duty cycle.

Refer to the Cummins Operation and Maintenance Manual for complete details.

Oil Recommendations - Cold Weather

It is possible to operate diesel engines in extremely cold environments. The engine should be properly prepared and maintained. The correct lubricants, fuels and coolant MUST be used for the cold weather range for which the motorhome is being operated. Cold weather operation can be defined in two categories: Winterize and Arctic.

Refer to the Operations and Maintenance Manual for more detailed information.

WINTERIZE (32º to -25º F) (0º to -32º C)

Use a 50 antifreeze/50 water coolant mixture, use multi-viscosity oil meeting Cummins specifications and fuel to have maximum cloud pour points 10º F (6º C) lower than the ambient temperature in which the motor home operates.

ARCTIC (-25º to -65º F) (-32º to -52º C)

Use a 60% antifreeze/40 water coolant mixture, use oil meeting Cummins specifications and fuel to have maximum cloud pour points 10º F (6º C) lower than the ambient temperature in which the motorhome operates.

Engine Maintenance & Coolant Fluid Fill

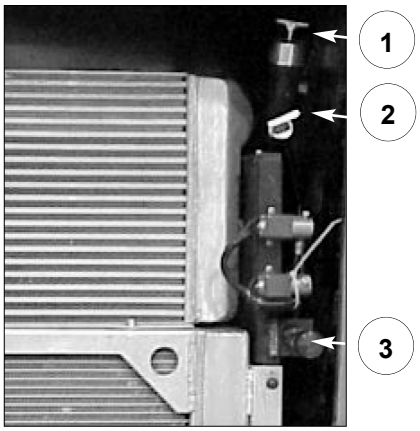

1. Oil Fill. 2. Oil Check. 3. Diagnostic Plug.

The engine maintenance checks and fills can be accessed through the rear access doors. The doors swing open allowing access to compartment.

When fully opened, the doors will lock in place. To release, the small metal button must be pressed when closing the door.

ENGINE SHUTDOWN

General guidelines for shutting the engine down are fairly simplistic. Allow the engine to idle three to five minutes after a full load operation. This allows adequate cool down of pistons, cylinders, bearings and turbocharger components. Under normal driving conditions, exiting the highway is generally lighter engine operation and the need for the three to five minutes is not necessary.

ENGINE SHUTDOWN - *Extended*

When the motorhome has been sitting for extended periods, 30 days or more, verify all the fluid levels are correct. Follow the normal starting procedures. If the oil pressure gauge does not register within 15 seconds, shut off the engine immediately to avoid damage. Consult the Cummins Operations and Maintenance Manual for guidelines on troubleshooting low oil pressure, or contact a qualified service technician. Allow the engine to idle for three to five minutes before operating under a load.

COOLANT

Use of a fully formulated antifreeze or coolant containing a precharge of Supplemental Coolant Additives (SCA) is recommended. Both the fully formatted antifreeze and a fully formatted coolant significantly simplify coolant system maintenance; however, the difference between the two is the percentage of

water. Both contain balance amounts of antifreeze, SCA, buffering compounds and a percentage of good clean quality water. The antifreeze of coolant must meet ethylene glycol or propylene glycol recommendations. Distilled water in a 50/50 ratio (40 to 60% working range) mixed with fully formatted antifreeze will provide protection from -34º F to 228º F. The 50/50 mix ratio must be premixed prior to being put in the system. Placing antifreeze and water in the cooling system is not recommended. Consult the O&M manual for more details.

NOTE: An over concentration of antifreeze, or the use of high silicate antifreeze, can cause damage to the coolant system and engine. Antifreeze is essential in every climate.

WARNING: The ISB engine is equipped with an intake air heater. Use of ether starting fluids can cause an explosion!

NOTE: Any item on the back of the motorhome which blocks the grill opening or changes the air flow may cause an overheating condition under some circumstances.

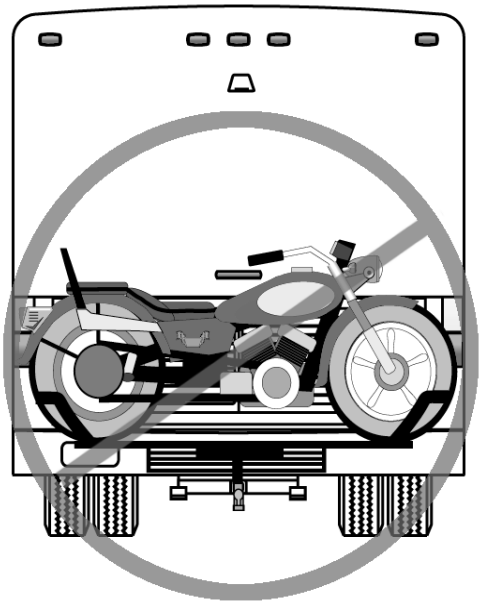

The coolant fluid freeze point should be checked with every oil change interval at 15,000 miles, 500 hours or six months, whichever comes first. Also change the coolant filter at the same interval unless SCA concentration is over three units. The coolant should be drained and flushed at 6,000 hour or two years of service, whichever comes first.

Engine Coolant Reservoir:

A "see-through" plastic reservoir, similar to the familiar windshield washer jar, is connected to the radiator by a hose. As the motorhome is driven, coolant is heated and expands. A portion of fluid displaced by this expansion flows from the radiator into the reservoir tank. When the engine is stopped, and coolant cools and contracts, displaced coolant is drawn back in the radiator by a vacuum. Thus, the radiator is kept filled with coolant to the desired level at all times, resulting in increased cooling efficiency. The coolant level should be at or above the appropriate mark on the reservoir tank when the system is cold.

- Check the coolant level daily or when refueling.
- Drain and flush the coolant system every 60,000 miles or two years, and refill with a heavy-duty coolant (50/50 mix of distilled water and anti-freeze).
- If the coolant is below the **MIN** mark, the low coolant alarm will sound and the low coolant light will appear on the dash. You will need to stop and check for coolant loss before driving.
- The coolant level is to remain between the **MAX** and **MIN** level in the reservoir.

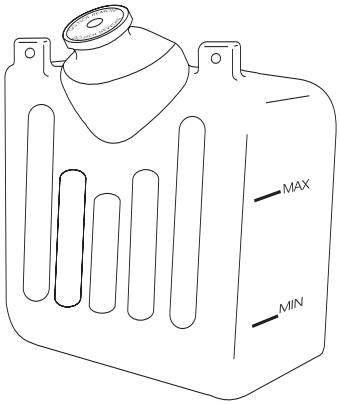

The coolant capacity, when changing the antifreeze, is approximately 11½ gallons.

Routine Maintenance Recommendations:

1. Check the SCA concentration level every 15,000 miles/six months.
2. Change the coolant filter every 15,000 miles/six months.
3. Drain and flush the system every 240,000 miles/two years, and refill with a heavy-duty coolant (50/50 mix of distilled water and antifreeze).
4. Always use antifreeze. In addition to freeze protection, antifreeze is essential for overheat and corrosion protection.
5. The supplemental coolant additive (SCA) is required.
6. Freeze point should be measured every 15,000 mile/six months.

Coolant - Additive (SCA)

Fully formulated products contain SCA and are required to protect the cooling system from fouling, solder blooming and general corrosion. The cooling filter is required to protect the coolant system from abrasive materials, debris and precipitated coolant additives.

Supplement coolant additives, or equivalent, are used to prevent liner pitting, corrosion and scale deposits in the cooling system. Use the correct Fleetguard coolant filter to maintain the recommended SCA concentration in the system. Maintain the correct concentration by changing the service filter at each oil drain interval.

NOTE: The correct filter is determined by the total cooling system capacity and oil drain interval. Refer to the Coolant Capacity Specifications in this section.

CAUTION: Insufficient concentration of the coolant additives will result in liner pitting and engine failure. The SCA concentration must not fall below 1.2 units or exceed 3 units per gallon of cooling system capacity.

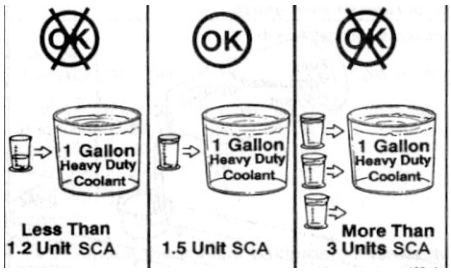

Use the correct Fleetguard coolant filter to maintain the recommended SCA concentration in the system. Maintain the correct concentration by changing the service coolant filter at each oil drain interval. The oil pressure gauge, temperature gauge, warning lamps and other safety lamps should be checked daily to ensure proper operations.

NOTE: The correct filter is determined by the total cooling system capacity. If you have any questions refer to the Cummins manual.

NOTE: The engine does not require a “break-in” procedure.

BRAKE - AUXILIARY

Auxiliary braking devices are designed to supplement a standard wheel braking system. These devices are not designed to bring the motorhome to a complete stop; however, they can assist in controlling the speed of the motorhome. Proper use of the auxiliary braking device can save on costly service brake repairs.

BRAKE - EXHAUST

The exhaust retarder is an auxiliary braking device which is attached directly to the engine turbocharger. Operate the exhaust brake by using either a dash switch or a foot operated switch. The dash mounted switch will operate the exhaust brake when dash switch is "ON" and the throttle is "RELEASED." If the motorhome has a foot operated exhaust brake switch it will not disengage the cruise control. Application of the service brake is required to disengage the cruise control. When the exhaust brake is activated a flapper inside exhaust brake moves and restricts the flow of exhaust gases and causes an increase of exhaust pressure within the engine.

The increased back pressure quickly slows the engine speed, resulting in powerful engine braking action. When the exhaust brake is activated, the amount of engine braking power developed is related to engine speed (RPM). When a exhaust brake application is made, the engine braking effect increases with higher engine RPM. When the exhaust brake is activated going down a hill, the exhaust brake will help control road speed or slow down the motorhome's road speed until the Allison Transmission automatically downshifts to the next lower gear. Downshifting automatically occurs from high gear down through second gear. Certain road conditions and engine speeds may require the transmission be manually down shifted in order to generate adequate engine RPM and increase the engine brake effect.

Exhaust Brake - Maintenance

The Exhaust Brake system, used routinely at normal exhaust operating temperatures, is virtually maintenance free. Some contributing causes which can result in failures with the exhaust brake include moisture, dirt, carbon and improper usage.

Starting the engine and idling for short periods of time is not recommended. Moisture is created within the engine and the exhaust system during cold startups. When normal operating temperatures are not obtained, moisture may get trapped in the valve housing resulting in rust, leading to insufficient operation of the exhaust brake.

Some problems you may encounter with the exhaust brake include, but are not limited to, will not activate or deactivate, intermittent on/off operations or actuates with the switch off. These are commonly related to electrical symptoms. Slow operations or delays in operations, as well as limited performance, are mechanical symptoms. You should refer these problems to your dealer for diagnosis.

TRANSMISSION (T-1000 5 Speed Models)

The Allison 1000 series transmission is a fully automatic, torque-converter driven, electronically controlled transmission. The electronic controls provide automatic gear selection in all drive ranges and automatic engagement of the torque converter lockup clutch.

The electronic control system has five major components: the Transmission Control Module (TCM), engine throttle position sensor, three speed sensors, Neutral Start Back Up (NSBU) switch and the control valve module. The TCM processes information received from the throttle position sensor, speed sensor, NSBU switch and control valve module. The electronic control system optimizes shift quality by using "Adaptive Shifting." A wide variety in shifting under varied conditions is required before optimizing the shift quality. Generally, five typical shifts of a shift type are needed for shift calibration.

Shift Selector

Park (P):
Places the transmission in neutral and engages the park pawl.

Reverse (R):
For backing up the motorhome.

Neutral (N):
Neutral operation.

Overdrive (OD):
Highway driving range 5.

Drive (D):
City driving range 3 and 4.

Second Range (2):
Heavy city traffic and braking on steeper downgrades.

First Range (1):
Driving on steep grades.
Pulling through mud or snow.
Maneuvering in tight spots.

First range provides the maximum driving torque and braking effect.

Range Inhibited Light

The Range inhibit lamp, located on the left dash console, is an indicator that range shifts requested may not occur. Certain operating conditions when detected by the TCM will inhibit shifting to protect from damaging operations. This is in response to diagnostic trouble codes received by the transmission control system.

Shift Inhibits

Shift inhibits falls within certain categories. Above-idle neutral range shifts are shifts from **N** (Neutral) to **R** (Reverse) or **N** (Neutral) to a forward range when the idle is in excess of 900 rpm (Above-idle). Forward/Reverse directional shifts are not permitted when measurable output shaft speed is detected.

Range Inhibit Lamp.

NOTE: Sudden movements or lurching the motorhome with an open throttle can result in damage to transmission. Avoid this condition by making shifts only when the throttle is closed and engine is at normal idle.

Certain unusual transmission operating conditions detected by the TCM will temporarily limit transmission operations. These conditions are transmission problems. The TCM will lock the Transmission in a safe gear range to permit the motorhome to be driven to a service location. The TCM may not respond to additional shift requests. Upshift and downshift may not occur and directional changes will not occur.

Transmission - Check Light

The electronic control system is programmed to inform the operator of a problem with the transmission system and automatically take action to protect the operator, motorhome and transmission. When the TCM detects a Range inhibit or Shift inhibit condition, the TCM restricts shifting, turns the **CHECK TRANS** light on the instrument panel and registers a diagnostic code.

NOTE: For some problems, diagnostic codes may be registered without the ECU activating the CHECK TRANS light. The Allison Transmission authorized service outlet should be consulted whenever there is a transmission related concern. They have the equipment to check for diagnostic codes and to correct problems which arise.

Each time the engine is started the **CHECK TRANS** will light, then turn off after a few seconds. This momentary lighting is to show that the status light circuits are working properly. If the **CHECK TRANS** light does not illuminate during start up, or if the light remains on after start up, the system should be checked immediately. Continued illumination of the **CHECK TRANS** light during vehicle operation (other than start up) indicates that the TCM has signaled a diagnostic code.

Rocking Out

It may be possible to rock the motorhome out if it is stuck in snow, mud or deep sand. Shift the selector to **D** (Drive) and apply a steady light throttle. Never apply full throttle as the wheels may spin and bury the motorhome deeper. When the motorhome has moved forward as far it will go, apply and hold the service brakes. Allow the engine to return to idle before selecting **R** (Reverse). Release the brake and apply light throttle until the motorhome has

rocked as far it will go. Again, apply the service brake and allow the engine to return to idle. Repeat this process if the motorhome has moved a greater distance. If the process does not free the motorhome, call for towing assistance.

NOTE: Sudden movements or lurching the motorhome with an open throttle can result in damage to transmission. Avoid this condition by making shifts only when the throttle is closed and engine is at normal idle.

Parking

Bring the motorhome to a complete stop using the service brakes and hold the brake pedal down. Allow the engine to come to a low idle (500 to 800 rpm). Apply the parking/emergency brake by pulling up on the knob. When the parking/emergency brake is set, move the shifter to the **P** (PARK) position. This engages the park pawl. Release the brake pedal.

NOTE: Chock all the wheels securely if the motorhome is left unattended.

A Park Pawl is used with the transmission which effectively grounds the output shaft preventing rotation of the driveline. An attempt to engage the park pawl with the motorhome in motion will ratchet the park pawl. The park pawl will not hold the motorhome and will not engage. When the motorhome is stationary, the park pawl is automatically engaged by shifting the shift lever to **P** (Park). Parking on an incline and not following parking procedures can result in a condition known as “Torque Lock.” Torque lock can occur when an excessive amount of torque is placed on the park pawl. It may be difficult to shift the transmission out of **P** (Park). Setting the Park brake before shifting to **P** (Park) can help prevent torque lock.

Periodic Inspections

For easier inspection, the transmission should be kept clean. Make periodic checks for loose bolts and leaking fluid lines. Check the condition of the electrical harnesses regularly. Check the engine cooling system occasionally for evidence of transmission fluid which would indicate a faulty oil cooler. Report any abnormal condition to the Allison dealer.

Prevent Major Problems

Help the electronic control system oversee the operation of the transmission. Minor problems can be kept from becoming major problems if you notify an Allison Transmission distributor or dealer when one of these conditions occur:

1. The shifting feels odd.
2. The transmission leaks fluid.

3. Unusual transmission-related sounds (changes in sound caused by normal engine thermostatic fan cycling, while climbing a long grade with a heavy load, have been mistaken for transmission-related sounds).
4. The **CHECK TRANS** light comes on frequently.

The Importance of Proper Fluid Levels

Because the transmission fluid cools, lubricates, and transmits hydraulic power, it is important that the proper fluid level be maintained at all times. If the fluid level is too low, the converter and clutches do not receive an adequate supply of fluid. If the fluid level is too high, the fluid can aerate. Aerated fluid can cause the transmission to shift erratically or overheat.

NOTE: The motorhome should be stationary for approximately two minutes prior to checking the fluid levels to ensure fluid is stabilized

Checking Fluid Levels

Any fluid meeting *Dexron-III* specifications are acceptable for use in the transmission. Transmission performance, reliability, and durability are important influences in the type of fluids used. Change the fluid and remote spin-on filter after the first 8,000 km (5,000 miles). The dipstick/oil fill is located between the engine and transmission underneath the engine access door in the bedroom. Change the transmission fluid and remote spin-on filter every 50,000 miles or 24 months, whichever occurs first.

The fluid and remote spin-on filter may require changing sooner depending on the severity of operating conditions. The fluid must also be changed whenever there is evidence of dirt or high temperature conditions as indicated by discoloration, strong odor or fluid analysis. Local conditions, severity of operation or duty cycle will dictate more or less frequent service intervals.

For more detailed information consult the Allison Transmission Owner's Manual.

Cold Check:

The concept of a cold check is to determine adequate fluid level for safe operating until hot check can be performed.

- Park the motorhome on a level surface using the service brakes.
- The engine is operated at a low idle, put the transmission in P (Park).
- Apply the parking brake and chock the wheels to prevent the motorhome from moving.
- Allow the engine to run at idle (500-800 rpm) for one minute.

- Apply the service brakes and shift to **D** (Drive), then to **N** (Neutral) and then to **R** (Reverse) to fill the system. Finally shift to **P** (Park) and release the service brakes. Allow the engine to continue to run at idle (500-800 rpm).
- Remove the dipstick and wipe clean. Reinsert the dipstick fully into the tube and remove to check fluid level. Repeat this to verify the reading if needed.
- Safe operating level is anywhere within the **COLD CHECK** band on the dipstick. The fluid level is sufficient enough to operate until a **HOT CHECK** can be run.
- If the level is not within this band, add or drain the fluid as necessary to bring the level to the middle of the **COLD CHECK** band.
- Perform the **HOT CHECK** the first opportunity after reaching normal operating temperatures (160º-200º F/71º-93º C).


Transmission Oil Level Dipstick.

Hot Check:

- Because the fluid level rises as the temperature increases, the fluid must be hot to ensure an accurate check.
- Be sure the fluid has reached normal operating temperature (160º-200º F/71º-93º C). If a transmission temperature gauge is not present, check the fluid level when the engine water temperature gauge has stabilized and the transmission has been operated under a load for at least one hour.
- Park the motorhome on a level surface and shift to **P** (Park). Apply the parking brake and allow the engine to idle (500-800 rpm).
- After wiping the dipstick clean, check the fluid level. Safe operating level is anywhere within the **HOT RUN** band on the dipstick.
- The width of the **HOT RUN** band is approximately one quart of fluid at normal temperature range.
- If the level is not within this band, add or drain the fluid as necessary to bring the level within the **HOT RUN** band.
- Be sure that the fluid level checks are consistent. Check the level more than once. If the readings are not consistent ensure that the transmission breather is clean and not clogged. If the readings are still not consistent, contact the nearest Allison distributor or dealer.

TRANSMISSION MH 3000 Model - (Optional)

Shift Selector

The Allison World transmission incorporates the World Transmission Electronic Control (WTEC) system. The system is compromised of five major components connected by a wiring harness: the electronic control unit (ECU), engine throttle position sensor, three speed sensors, remote shift selector (keypad) and the control module. The ECU will process information

received from the throttle position sensor, speed sensor, pressure switch and shift selector to activate solenoids on the control module in the transmission. The solenoids control oncoming and off going clutch pressure to provide closed loop shift control. This is accomplished by matching rpm during a shift to an established desired profile within the ECU.

The system is monitored within the first 30 seconds of each engine start. This is referred to as "autodetect." Autodetect searches for presence of data inputs or transmission components. The autodetect enables the ECU functional or diagnostic response to the items which are detected.

Another feature of the transmission is the ability to "learn" or "adapt." The electronic control system optimizes shift quality by using "Adaptive Shifting." A wide variety in shifting under varied conditions will be required before optimizing the shift quality. Generally, five typical shifts of a shift type is needed for shift calibration.

The range selection is accomplished via the remote pushbutton selector. The selector is simplistic in appearance. The controls are **R**, **N**, **D**, arrow **UP**, arrow **DOWN**, **MODE** buttons and a digital display window. Under normal operations the "**D**" button is pressed and the digital display shows the highest forward range attainable for the shift selection in use. The digital display window will also indicate codes for abnormal conditions, and can even be a useful troubleshooting aid. When the ignition is turned ON, the display should be visible. This display indicates the presence of neutral start command. If this display indication is not visible, there is no power to the selector and may indicate electrical problems with the batteries.

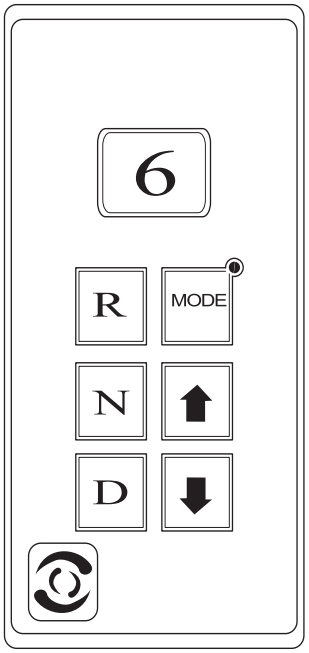

- Digital display window enables information requested to be easily read.
- Select the **REVERSE** gear by pressing "**R**".
- Select **NEUTRAL** by pressing "**N**". The area around the "**N**" button is a raised ridge so the driver can orient his hand to the push buttons by touch, without looking at the display.
- Select **DRIVE** range by pressing "**D**". The highest forward gear appears on the **SELECT** display and the transmission will shift to the starting gear.
- The **UPSHIFT** and **DOWNSHIFT** arrow buttons are used to select a higher (if not in "**D**") or lower (if not in "**1**") forward range. These buttons are not functional in **NEUTRAL** or **REVERSE**. One press changes the range selected by one range. If the button is held continuously, the selected range will continue to change up or down until the button is released or until the highest/lowest possible range of gears is selected.
- The **MODE** button enables a secondary shift point to be selected. This is commonly referred to as "Economy." It is further used by the service technician to access diagnostic codes when troubleshooting. The diagnostic circuitry must be enabled to display.

Transmission - Check Light

The electronic control system is programmed to inform the operator of a problem with the transmission system and automatically take action to protect the operator, motorhome and transmission. When the Electronic Control Unit (ECU) detects a **DO NOT SHIFT** (DNS) condition the ECU restricts shifting, turns the **CHECK TRANS** light on the instrument panel and registers a diagnostic code.

NOTE: For some problems, diagnostic codes may be registered without the ECU activating the CHECK TRANS light. An Allison Transmission authorized service outlet should be consulted whenever there is a transmission related concern. They have the equipment to check for diagnostic codes and to correct problems which arise.

Each time the engine is started the **CHECK TRANS** will light, then turn off after a few seconds. This momentary lighting is to show that the status light circuits are working properly. If the **CHECK TRANS** light does not illuminate during start up, or if the light remains on after start up, the system should be checked immediately.

Continued illumination of the **CHECK TRANS** light during vehicle operation (other than start up) indicates that the ECU has signaled a diagnostic code. Illumination of the **CHECK TRANS** light is accompanied by a flashing display from the shift selector. The shift selector display will show actual range attained and the transmission will not respond to shift selector requests.

Indications from the shift selector are provided to inform the operator that the transmission is not performing as designed and is operating with reduced capabilities. Before turning the ignition off, the transmission may be operated for a short time in the selected range in order to “limp home” for service assistance. Service should be performed immediately in order to minimize potential for damage to the transmission.

When the **CHECK TRANS** light comes on and the ignition switch is turned off, the transmission will remain in **N** (Neutral) until the condition causing the **CHECK TRANS** light is corrected. Generally, while the **CHECK TRANS** light is on, upshifts and downshifts will be restricted and direction changes will not occur. Lever and push-button shift selectors do not respond to any operator shift request while the **CHECK TRANS** light is illuminated. The lockup clutch is disengaged when transmission shifting is restricted, or during any critical transmission malfunction.

Diagnostic Codes:

The diagnostic codes are numerical representations of malfunctions in the transmission operations. Each code is a two digit main code and a two digit sub code. The codes, when detected, are logged in the ECU memory. These codes will fall in two classes: active and inactive. Active codes are codes currently effecting the ECU process. Inactive codes are retained but may not

effect the ECU process. The diagnostic mode must be entered. A maximum of five codes, **D1** to **D5**, may be listed at one time. The highest priority code will be listed in **D1**. The **MODE** button will enable selection of sequential codes.

- Enable Diagnostic Code Selection Display.
- Stop the motorhome at a safe location.
- Apply the parking brake.
- Simultaneously press the **UP** and **DOWN** arrows twice to enter the stored codes. The first time the arrows are pressed will indicate the oil level sensor information.
- The codes will display one digit at a time.
- The mode button is pressed to scroll through the codes.
- Any code obtained should be noted and reported to an Allison Service Center for evaluation and possible repair.
- Inactive codes can be cleared by holding the **MODE** button for approximately three seconds. Some codes are self clearing while others will require service or ignition cycles to clear.

Transmission -Periodic Inspections

The Allison MH Series requires minimum maintenance. Careful attention to the fluid level and the connections for the electronic and hydraulic circuits is very important.

For easier inspection the transmission should be kept clean. Make periodic checks for loose bolts and leaking fluid lines. Check the condition of the electrical harnesses regularly. Check the engine cooling system occasionally for evidence of transmission fluid which would indicate a faulty oil cooler. Report any abnormal condition to an Allison dealer.

Prevent Major Problems:

Help the WTEC III control system oversee the operation of the transmission. Minor problems can be kept from becoming major problems if an Allison Transmission distributor or dealer is notified when one of these conditions occur:

1. The shifting feels odd.
2. The transmission leaks fluid.
3. There are unusual transmission-related sounds (changes in sound caused by normal engine thermostatic fan cycling, while climbing a long grade with a heavy load, have been mistaken for transmission-related sounds).
4. The **CHECK TRANS** light comes on frequently.

The Importance of Proper Fluid Levels:

The transmission fluid cools, lubricates and transmits hydraulic power. Proper fluid levels must be maintained at all times. If the fluid level is too low, the converter and clutches do not receive an adequate supply of fluid. If the fluid level is too high, the fluid can aerate. Aerated fluid can cause the transmission to shift erratically or overheat.

The MH Series oil level sensor (OLS) allows the operator to obtain an indication of sensor fluid level from the keypad shift selector. Frequently check for the presence of oil level diagnostics in the transmission. If the OLS has not been detected, troubleshooting of the OLS circuit is required. This will have to be performed by an Allison Service Center. After the OLS circuit is repaired, ensure that reset of the "autodetect" or manual selection of the OLS function, using the Pro-Link, has been accomplished.

Fluid Level Check with the Keypad:

- Park the motorhome on a level surface, place the transmission in "**N**" and set parking brake.
- The transmission should be at normal operating temperature.
- The motorhome should be stationary for approximately two minutes to ensure fluid is stabilized.
- Simultaneously press the arrow **UP** and arrow **DOWN** buttons one time.
- The delayed fluid level check will display in the digital display window. The display will be one character at a time. The "**o,L**" represents oil level check mode. This will be followed with fluid level indication readings. The "**o,K**" indicates a correct fluid level. Reading between the OLS and the dipstick may not agree because the OLS compensates for fluid temperatures. Abnormal indications of the OLS will be "**Lo**" representing a low fluid level, "**HI**" for a high fluid level or "**oL**" for invalid information and system problems. All indications will be followed by numeric values. The "**Lo**" and "**HI**" followed by the numeric value represents the quarts of fluid required for the system. The invalid code numbers represent specific symptoms.

Common Oil Level Fault Codes:

- 0,5 settling time too short.
- 5,0 speed RPM too low.
- 5,9 speed RPM too high.
- 7,0 sump temperature too low
- 7,9 sump temperature too high
- 9,5 OLS FAILURE

Exit the fluid level display by pressing any range button on the keypad.

NOTE: To correctly check the transmission fluid level using the dipstick, the transmission fluid must be at operating temperature. The oil level sensor method of checking the fluid level compensates for transmission fluid temperature between 60º C - 104º C (140º F - 220º F). Any temperature below 60º C (140º F), or above 104º C (220º F), will result in an Invalid for Display condition.

Transmission Lubricating Fluid

Any fluid meeting Dexron-III specifications are acceptable for use in the transmission. Transmission performance, reliability and durability are important influences in the type of fluids used. Change the fluid internal filters after the first 8,000 km (5,000 miles). The dipstick/oil fill is located between the engine and transmission underneath the engine access door in the bedroom. Change the transmission fluid and internal filters every 40,000 km (25,000 miles) or 18 months, whichever occurs first.

Fluid and Internal Filters Change Interval Recommendations:

The fluid and internal filters may require changing earlier depending on the severity of operating conditions. The fluid must also be changed whenever there is evidence of dirt or high temperature conditions as indicated by discoloration, strong odor or fluid analysis. Local conditions, severity of operation or duty cycle will dictate more or less frequent service intervals.

Transmission Fluid Levels - Cold Check

Cold Check - Manual Check Procedures:

The concept of a cold check is to determine adequate fluid level for safe operating until hot check can be performed.

- Park the motorhome on a level surface using the service brakes.
- The engine is operated at a low idle. Put the transmission in **N** (Neutral).
- Apply the parking brake and chock the wheels to prevent the motorhome from moving.
- Allow the engine to run at idle (500-800 rpm) for one minute.
- Apply the service brakes and shift to **D** (Drive), then to **N** (Neutral) and next to **R** (Reverse) to fill the system. Finally shift to **N** (Neutral) and release the service brakes. Allow the engine to continue to run at idle (500-800 rpm).
- Remove the dipstick and wipe clean. Reinsert the dipstick fully into the tube and remove to check fluid level. Repeat this to verify the reading if needed.

- Safe operating level is anywhere within the **COLD CHECK** band on the dipstick. The fluid level is sufficient enough to operate until a **HOT CHECK** can be run.
- If the level is not within this band, add or drain the fluid as necessary to bring the level to the middle of the **COLD CHECK** band.
- Perform the **HOT CHECK** the first opportunity after reaching normal operating temperatures (160º-200º F/71º-93º C).

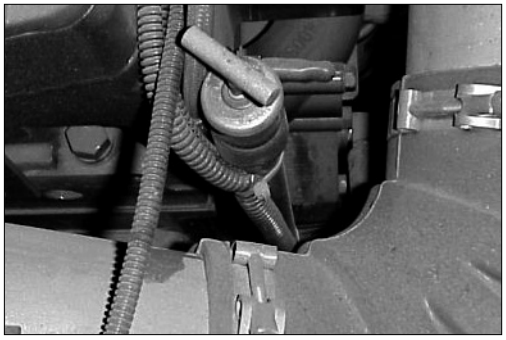

Transmission Oil Level Dipstick.

CAUTION: Low or high fluid level can cause overheating and irregular shift patterns. These conditions can damage the transmission if not corrected.

Transmission Fluid Levels - Hot Check

- The fluid level rises as the temperature increases. The fluid must be hot to ensure an accurate check.
- Be sure the fluid has reached normal operating temperature (160º-200º F/71º-93º C). If a transmission temperature gauge is not present, check the fluid level when the engine water temperature gauge has stabilized and the transmission has been operated under the load for at least one hour.
- Park the motorhome on a level surface and shift to **N** (Neutral). Apply the parking brake and allow the engine to idle (500-800 rpm).
- After wiping the dipstick clean, check the fluid level. Safe operating level is anywhere within the **HOT RUN** band on the dipstick.
- The width of the **HOT RUN** band is approximately one quart of fluid at normal temperature range.
- If the level is not within this band, add or drain the fluid as necessary to bring the level within the **HOT RUN** band.
- Be sure that the fluid level checks are consistent. Check the level more than once. If the readings are not consistent check to be sure that the transmission breather is clean and not clogged. If the readings are still not consistent, contact the nearest Allison distributor or dealer.

FUEL SYSTEM

Low sulphur #2 diesel fuel or #1 and #2 commercial winter blend diesel fuels are the most common commercially available and recommended for use. The Cummins Engine Company Inc. recommends the use ASTM #2D fuel. The use of #2 diesel fuel will result in optimum engine performance.

WARNING: Do not mix gasohol with diesel fuel. This mixture can cause an explosion.

NOTE: Due to the precise tolerances of diesel injection systems, it is extremely important that fuel be kept clean and free of dirt or water. Dirt or water in the system can cause severe damage to both the fuel pump and the fuel injector. Fuel additives for lubricity are not recommended. There are numerous diesel fuel additives to help remove moisture from fuel, prevent microbe growth and to prevent freeze-up during cold weather. Any fuel additives product should show supporting data for performance and benefits. Engine failures caused by incorrect fuel are not covered under warranty.

FUEL TANK

The diesel fuel tank is made of a 12 gauge aluminumized steel. The capacity of the tank is 75 gallons. The engine pickup tube is cut at a 45° angle to allow optimum flow to the engine.

NOTE: If the coach has been stored for any length of time you should check the vent for blockage. It is not uncommon for insects to plug the vent tube. If the tank appears to be pressurized the vent tube may be blocked. To inspect the vent tube check on the roadside of the fuel tank, near the bottom. Always store the motorhome with a full fuel tank.

Routine Maintenance Recommendations:

1. Change the fuel filter at every oil change interval.
2. Change the fuel-water separator filter every 12-18 months or every 25,000 miles.

FUEL/WATER SEPARATOR

Fuel/Water separator is located in rear engine compartment on the left side of the frame. If the **WATER IN FUEL** light is illuminated, the fuel filter will need to be drained. Shut off the engine and open the drain valve. Turn the valve counterclockwise approximately 1½ to 2 turns until draining occurs. Drain the fuel/water separator of water and sediment until clear fuel is visible. Turn the valve clockwise to close the drain valve.

In the event the engine runs out of fuel, the lift pump on the fuel pump will run for approximately one minute with the ignition ON. The ignition may have to be turned on and off several times before attempting a start. If unable to restart, contact the nearest Cummins Center or phone **1-800-343-7357** for Cummins Customer Assistance Center.

FUEL SENDING UNIT

The Centroid fuel sender has no moving parts. It works by measuring capacitance, an electrical property, between its inner and outer tubes in the tank. The more fuel between the tubes, the higher the reading. Electronics in the hockey-puck head of the sender convert the capacitance to current to drive the fuel gauge.

Connections:
The Centroid sender has four connections:
- **Positive and Negative:** Battery voltage to run the electronics in the sender head.
- **Send:** Connects to the Send terminal of the gauge on the dash.
- **Alarm:** Makes a connection internally to the Negative terminal when the low alarm fuel level is reached (when gauge is reading about 1/8 tank). This turns on the alarm light on the dash. It is not adjustable.

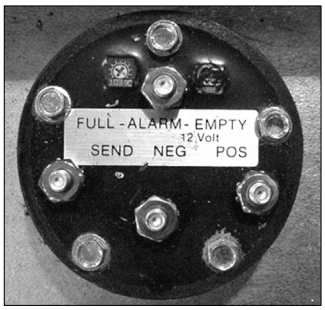

Fuel Sending Unit.

Adjustments:
The Centroid sender has two adjustments:
- **Empty:** Adjusts for length of sender. It has been set at the factory and covered with a sealant. It should not be changed.
- **Full Adjustment:** The full adjustment can be used to correct for slight differences between fuel meters. During installation, it has been calibrated for your meter and should not need readjustment.

The correct adjustment technique, with a full tank of fuel, is to start with the full adjustment screw completely clockwise. This should cause the reading to be above full. Then adjust slowly counterclockwise until the full mark is reached.The intent is to always adjust downscale rather than upscale.

Troubleshooting:

A. **Electronic output:** The sender has a transistorized output. This prevents an ohmmeter from getting a correct reading of its output resistance.

B. **Fuel Only:** The sender will not work correctly in conducting fluids such as water (it will read above full all the time in water). One possibility is that when there is a constant above-full reading there may be water in the bottom of the fuel tank.

C. **Contact Centroid:** Probably 90% of the returns Centroid tests work okay on the bench. If you have incorrect readings contact Centroid (telephone: 800-423-3574 or, preferably, fax: 904-423-3709) with the symptoms. A short,“fill in the blanks” troubleshooting test is provided, appropriate to the sender. It is easier to find the problem that way than after the sender has been removed from the system, since the problem is not necessarily with the sender.

POWER STEERING RESERVOIR

On a walk around and pre-check of the motorhome, look for oil leaks under the coach and around hose fittings. If a hose connection appears to be leaking, clean the filter and the surrounding area. If the seepage continues, have the problem corrected to prevent an untimely failure.

The power steering reservoir is located curbside in the engine access area under the bed. The reservoir is filled with *Dexron III* Automatic Transmission Fluid from the factory.

Check the oil level in the reservoir every 6,000 miles or three months. The oil dipstick fill is located on top of the reservoir in the rear compartment. The oil level should be kept between the full and add marks on the dipstick. Change the hydraulic oil filter every 15,000 miles, or once a year for cellulose element. A synthetic media filter is available, which will extend the interval to once every five years.

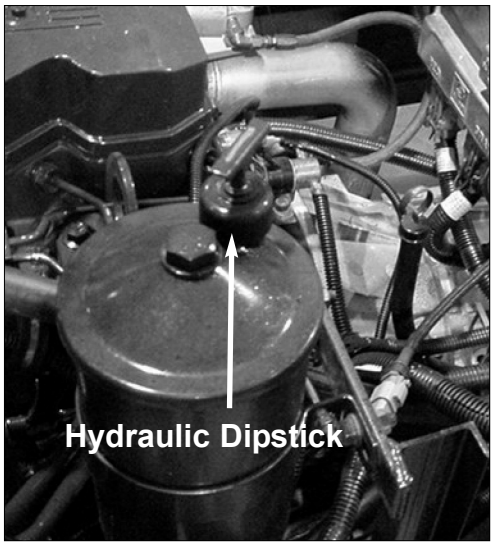

STEERING GEAR

The M-80 series Sheppard steering gear requires no maintenance. Power steering is provided by using hydraulic pressure to assist rotating the output shaft of the steering gear. Located at the end of the input shaft of the steering gear is poppet valve and worm drive. The poppet valve directs the hydraulic fluid pressure to a type of spool. There are worm drive threads in the center of the spool. When in the center position, pressurized hydraulic fluid bypasses the spool. When a turn is made, the poppet valve shifts to one direction or the other, directing the hydraulic pressure to one side of the spool depending on turning direction. The hydraulic fluid is then cooled before returning to the reservoir. Inspect for signs of leakage when performing fluid level checks. Changing the hydraulic filter at regular intervals will help ensure trouble-free operation.

AIR FILTER MINDER

The air filter minder is a precision airflow restriction gauge designed to take the guesswork out of air cleaner replacement. The air filter minder is located in the engine rear compartment. Its operation is simple and virtually foolproof. As dirt captured by filter cartridge slowly builds up, the system pressure drop increases and is indicated by the filter minder on an easy to read scale. The indicator locks up at the point of maximum restriction so readings can be taken with or without the engine running. When the desired change-out point is reached, the air filter should be replaced, and the service indicator is easily reset by pushing the button at the bottom of the minder.

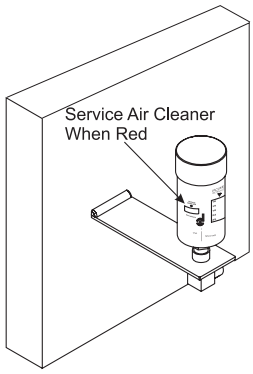

Located in the engine compartment.

AIR FILTER -CHANGING

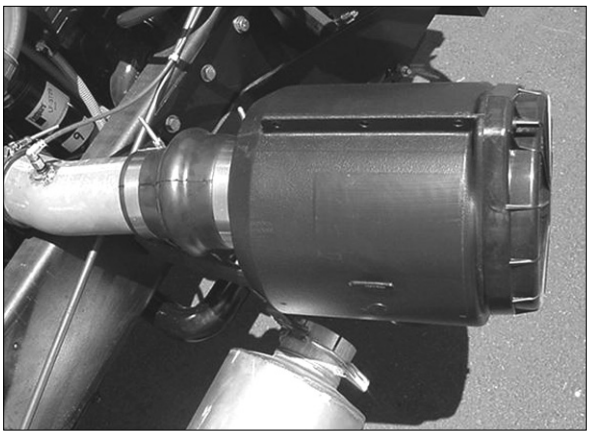

Air Filter.

The red section of the filter minder indicates airflow is being restricted to the engine and the air filter needs to be changed. To replace the filter element, unscrew the two plastic screws located on the end of the filter housing. Remove the housing end plate and slide the old filter out.

DRIVE AXLE LUBRICANT

Proper Drive Axle Lubricant Level:

- Regular inspection of the drive axle lube levels is an essential maintenance procedure.
- The lubricant should be level with bottom of the hole.
- Important: The lube level close enough to the hole to be seen or touched is not sufficient. The lube must be level with the hole.
- The differential is filled with API GL-5 or MT-1 type gear lubricant, Pennzoil Gear Plus Super-EW 75w-90.

NOTE: When checking the lube level, also check the housing breathers. Clean the breathers if dirty, replace them if damaged.

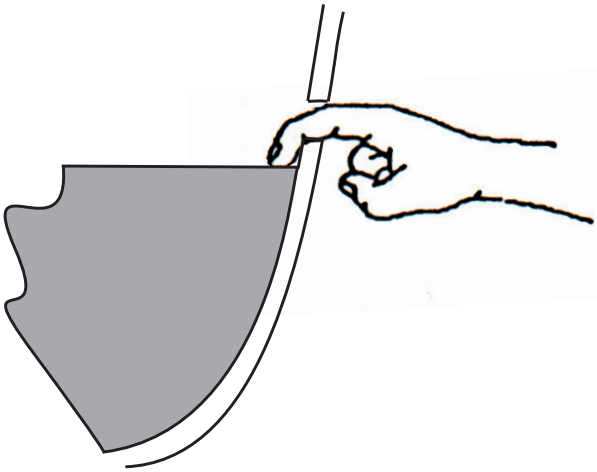

Incorrect Oil Level.

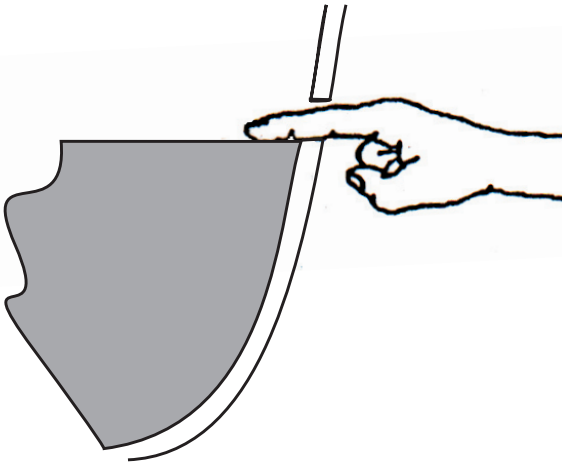

Correct Oil Level.

DRIVELINE

Greasing the Driveline Universal Joint:

1. Check the driveline for looseness. If loose, service the driveline as necessary.

2. Apply the specified grease at the grease fitting on the universal joint. Apply grease until the new grease purges from all the seals.

3. If the new grease does not purge at the seals, loosen the bearing cap bolts and regrease until all four caps purge. If the new grease still does not purge, replace the universal joint.

Greasing the Driveline Slip Yoke and Splines:

1. Check the driveline for looseness. If loose, service the driveline as necessary.

2. Cover the air hole so that grease can flow easily to the seal. Apply the specified grease at the grease fitting on the slip yoke. Apply grease until new grease purges from the air hole in the end of the slip yoke. Greasing Intervals-10,000 miles or annually.

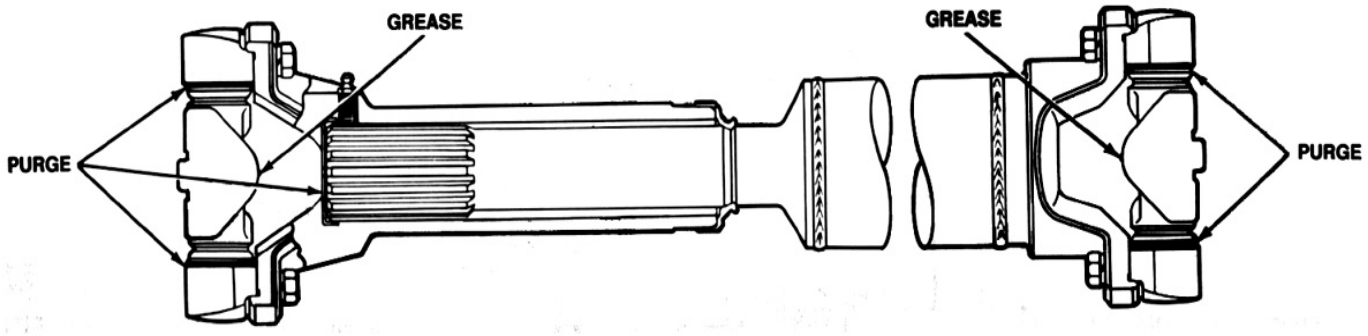

LUBRICATION - CHART

Front of Coach

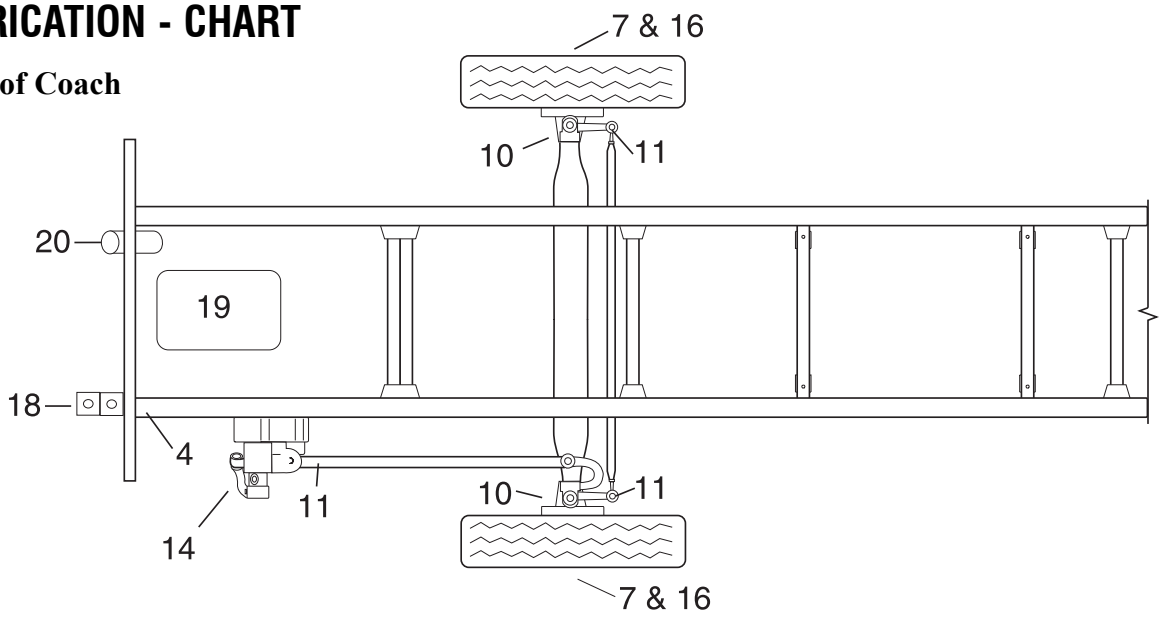

Service must be performed every twelve (12) months regardless of actual mileage, to protect seals, bearings and gaskets from drying out and failing. The motorhome must be started and driven for at least 20 miles bimonthly.

Component	Action	When	Code - Refer To Chart
1. Engine Oil	Keep To Full Mark	Check Daily	EO
2. Engine Oil Filter	Replace	At Oil Change	OP
3. Transmission	Keep To Full Mark	Refer O & E Manual	TF
4. Steering Shaft	3 Fittings	30,000 or Annually	CL-4
5. Drive Shaft U-Joints	2 Fittings	10,000 or Annually	CL
6. Drive Shaft Slip Joint	1 Fitting	10,000 or Annually	CL
7. Steering Axle Hubs	Check Oil level line	1,000	GO
8. Battery Terminals	Apply Coating	10,000 or Annually	P
9. Rear Axle Differential	Replace	50,000 or 3 Years	MP
10. King Pins & Knuckles	2 Fitting Each End	5,000 or 6 months	CL
11. Drag Link/Tie Rod	4 Fittings	5,000 or 6 months	CL
12. Power Steering Reservoir	Keep To Full	6,000 or 3 months	TF
13. Power Steering Filter	Replace	15,000 or Annually	TF
14. Steering Gear Box	1 Fitting	30,000 or Annually	CL
15. Engine Coolant	Replace	Every 2 Years	AF
16. Steering Axle Hubs	Change	30,000 or Annually	GO
17. Engine Fuel Filter	Change	15,000 or 6 months	FF
18. Master Cylinder	Keep to Full	6 months	BF
19. Generator Set	Hours	Refer O & E manual	OP
20. RVA Reservoir	Fill	As Required	TF

It is important to remember the generator lubrication interval is based on hours of usage. Consult the O & E manual for the generator service interval.

Rear of Coach

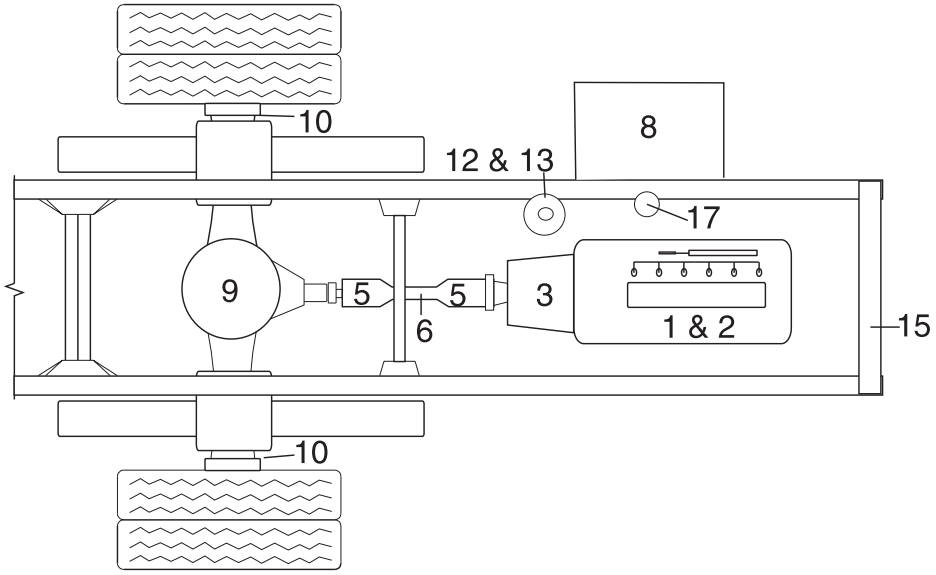

Lubrication Code Chart:

CL-4 U-Joints located inside coach under steering cover.
EO Engine oil as recommended by engine manufacturer.
OP Refer to operators manual.
MP API GL-5 or MT-1 type gear lubricant - Pennzoil Gear Plus SUPER-EW 75W-90, Synthetic.
GO EP-SAE 90 gear oil.
CL Chassis lubricant should be a high quality non corrosive multipurpose lithium soap pressure gun lubricant that is water resistant and designed to withstand extremely high operating temperatures.
TF Transmission fluid. Use *Dexron III* transmission fluid only.
P Petroleum jelly, or a commercial battery terminal corrosion inhibitor.
AF Consult Cummins Owners manual for antifreeze type.
BF Dot-3 Brake fluid.
FF Fuel Filter.

PARTS - COMMON SOLENOIDS & SENDERS

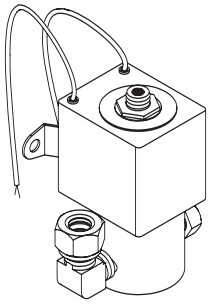

Rear Bag Dump Solenoids.

Rear Bag Dump Solenoids:
- Only used for the hydraulic leveling.
- Dumps air in the rear bags.
- Two air bag solenoids, one for each side.
- Location - Open rear the engine compartment door, the solenoids are located on the curbside next to the radiator.

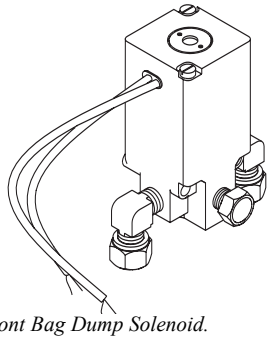

Front Bag Dump Solenoid.

Front Bag Dump Solenoid:
- Only used on hydraulic leveling.
- Dumps the air in the front air bags.
- Location - Open the generator door and the solenoid is located on the center front firewall.

Sending Unit Locations:

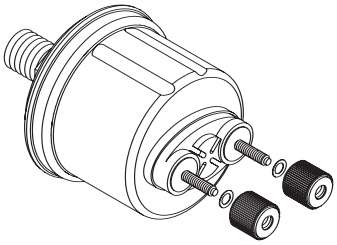

Sending Unit.

Oil Pressure/Low Oil Pressure Warning Dual Post Sending Unit:
- One post oil pressure.
- ISB 260 engines, the sending unit is located on the curbside under the ECM.

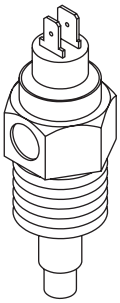

Water Temperature Sender.

Water Temperature/High Water Temp Dual Post Sending Unit:
- One post water temperature.
- ISB 260 engines, the sending unit is located in the engine block.

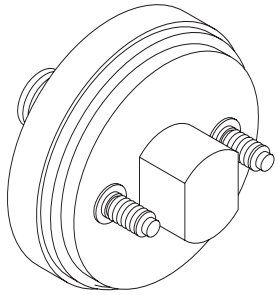

Low Air Switch.

Low Air Switch:
- 1/8-27 NPTF thread.
- Actuates at 66 psi.
- Single pole, two terminal.
- Switch used to illuminate park brake lamp under left dash console.
- Switch used to illuminate low air lamp located behind the dash cluster.

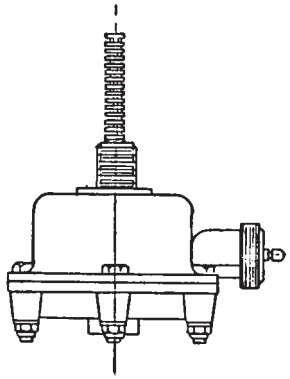

Drain Valve.

Automatic Drain Valve:
- Momentary release of air/water.
- Activated through brake light circuit.
- Located WET side of the Air Storage tank.

FILTERS & BELTS
ISB Engines

ISB FILTERS AND BELTS	MANUFACTURER	NUMBER
Oil Filter	Fleetguard	LF 3729
Fuel Filter Primary	Raycor	S3201T
Fuel Filter Secondary	Fleetguard	FS 19519
Transmission Filter Remote Spin On	Filtech	29531007
Power Steering Filter	Nelson	84365 cellulose (one year)
“ ”	Nelson	87904 synthetic (five year)
Alternator Belt	Dayco	3911584
A/C Belt	Dayco	17435
Air Filter	Donaldson	P527484

NOTE: These filter and belt numbers were correct at the printing of this manual. Please verify number at removal. Holiday Rambler will not be responsible for incorrect filter or belt usage. Please refer to the engine manufacturer’s operating instructions for specific maintenance information.

ISC Engine - (Optional)

ISC 315 FILTERS AND BELTS	MANUFACTURER	NUMBER
Oil Filter	Fleetguard	LF 3000
Fuel Filter Primary	Raycore	S3201T
Fuel Filter Secondary	Fleetguard	FS 1022
Coolant Filter	Fleetguard	WF 2071
Power Steering Filter	Nelson	84365 cellulose (1 year)
	Nelson	87904 synthetic (5 year)
Alternator Belt	Dayco	3911581
A/C Belt	Dayco	17475
Air Filter	Donaldson	P527484

*MP = Manufacturer's Part #

NOTE: Filter and belt numbers were correct at the time of printing. Verify the numbers at time of removal. Holiday Rambler will not be responsible for incorrect filter or belt usage. Please refer to the engine manufacturer's operating instructions for specific maintenance information.

CHART - SPECIFICATIONS

MEASUREMENTS	34Y	34H	36Z	36R
Wheelbase	204"	204"	228"	204"
Overall Length	34' 4"	34' 4"	36' 4"	34' 4"
Overall Height with A/C	12' 0"	12' 0"	12' 0"	12' 0"
Interior Height	6' 6"	6' 6"	6' 6"	6' 6"
Interior Width	94.5"	94.5"	94.5"	94.5"
Exterior Width	100.5"	100.5"	100.5"	100.5"

CHASSIS LOG

Date	Mileage	Dealer Address	Service/Remarks

CHASSIS LOG

Date	Mileage	Dealer Address	Service/Remarks

CHASSIS LOG

Date	Mileage	Dealer Address	Service/Remarks

CHASSIS LOG

Date	Mileage	Dealer Address	Service/Remarks

CHASSIS LOG

Date	Mileage	Dealer Address	Service/Remarks

GLOSSARY OF TERMS

AC Electricity - Alternating current also known as household power.

Ampere (Amp) - The unit of measure of electron flow rate of current through a circuit.

Ampere-hour (Amp-hr. AH) - A unit of measure for a battery electrical storage capacity, obtained by multiplying the current in amperes by the time in hours of discharge (Example: a battery which delivers 5 amperes for 20 hours, delivers 5 amperes times 20 hours, or 100 Amp-Hr. of capacity.)

Black Water - Term associated with the sewage holding tank. The toilet drains directly into this tank.

Chassis Battery - Powers chassis 12 Volt accessories and starts engine.

Circuit - An electric circuit is the path of an electric current. A closed circuit has a complete path. An open circuit has a broken or disconnected path.

City Water - A term associated with the water supply that you hook-up to when you are at campgrounds. It is called city water because you pull water from a central source (like in a city) and not the fresh water tank.

Curbside - This refers to the side of the motorhome which faces the curb when it is parked. Often called the door side.

Current (Alternating) (AC) - A current that varies periodically in magnitude and direction. A battery does not deliver alternating current. Also referred to as shore power, utility power, inverter power, generator power, etc.

Current - The rate of flow of electricity or the movement rate of electrons along a conductor. It is comparable to the flow of a stream of water. The unit of measure for current is the ampere.

Cycle - In a battery, one discharge plus one recharge equals one cycle.

DC Electricity - Direct current also known as battery power.

Direct Current (DC) - Power that is stored in a battery bank or supplied by photovoltaics, alternator, chargers and DC generators.

Drain Trap - This is a curve that is in all drains. Water is trapped in the curve and this creates a barrier so tank odors cannot escape through the drain.

Dry Camping - Camping in the motorhome when there is no city water hook-up or shore power. In other words, using only the water and power that is in the motorhome and not anything from another source.

Dump Station - Sites where you can drain your waste (grey) and sewage (black) tanks. In most states it is illegal to drain your tanks anywhere except at dump stations.

Dump Valve - Another name for the T-handle valve used to drain the sewage (black) and waste (grey tanks).

Egress Window - The formal name for the emergency window located in the rear of the motorhome. Egress windows can be easily identified by their red handles.

Full Hook-Up Site - A campground that has city water, shore power and sewer hook-ups or connections available.

Grey Water - Term associated with the waste water holding tank. Water from the sink drains, the shower and the washer/dryer (if equipped) go into this tank.

House Battery - Powers 12 Volt lights and accessories inside motorhome.

LED - (Light Emitting Diode) Indicator light.

Low Point - The lowest point in the plumbing. Drains are placed here so that water will drain out of the lower end of the motorhome. These drains must be closed when you fill the water tank.

OHM - A unit for measuring electrical resistances.

Ohm's Law - Express the relationship between volt (E), amperes (I) in an electrical circuit with resistance (R). It can be expressed as follows: $E = IR$ If any two of the three values are known, the third value can be calculated by using the above formula.

Road Side - This refers to the side of the motorhome which faces the road when it is parked. Often called the off-door side.

Shore Line - This is the electrical cord which runs from the motorhome to the campground 120 Volt electrical supply.

Shore Line Plug - This is the 120 Volt outlet that you can plug your motorhome into a campground.

Stinger - An arm attachment on a tow truck that is used to lift motorhome slightly so that it can be towed.

Volt - The unit of measure for electric potential.

Watt - The unit for measuring electrical power, i.e., the rate of doing work, in moving electrons by or against an electric potential.

Wet Cell Battery - A type of battery that uses liquid as an electrolyte. This type of battery requires periodic maintenance such as cleaning the connections and checking the electrolyte level.

A

B

C

D

E

F

G

H

I

J, K, L

M, N

O

P, Q

R

S

T

V

W, X, Y, Z

TECHNICAL PUBLICATIONS

Manager Vance Buell
Designer/Director Dawn Davis
Editing Technical Publications

OREGON OPERATIONS

Technical Writers
William Birch
Robert Buckholtz

Creative
Layout Design Kelly Stroble, Dawn Davis
Cover Design Kelly Stroble
Technical Illustrator Judie Pressler

Printing
Technaprint

INDIANA OPERATIONS

Technical Writer
Fran Weisenstein

Creative
Layout Design Penny Eddinger, Sue Stover
Cover Design Rob Taylor
Technical Illustrator Judie Pressler

ONLINE

CORPORATE SITE
www.monaco-online.com

MONACO PRODUCTS
www.monacocoach.com

ONLINE TOURS
www.monaco-tours.com

NOTES