WARRANTY - LIMITED: 2004 NAVIGATOR . . . . . .1
WARRANTY - LIMITED: 2004 ROADMASTER CHASSIS . . .6
WARRANTY INFORMATION FILE . . . . . .10

# WARRANTY - LIMITED: 2004 NAVIGATOR

## HOLIDAY RAMBLER MOTORHOME LIMITED WARRANTY

If you use your Holiday Rambler® motorhome only for recreational travel and family camping purposes, the Limited Warranty provided by Holiday Rambler ("Warrantor") covers your new motorhome when sold by an authorized dealer, for twelve (12) months from the original retail purchase date or the first 24,000 miles of use, whichever occurs first. However, the Limited Warranty provided by Warrantor covers the steel or aluminum frame structure of the sidewalls (excluding slide outs), roof, and rear and front walls for sixty (60) months from the original retail purchase date or the first 50,000 miles of use, whichever occurs first.

If you use your motorhome for any rental, commercial or business purposes whatsoever, the Limited Warranty provided by Warrantor covers your new motorhome when sold by an authorized dealer for ninety (90) days from the original retail purchase date or the first 24,000 miles of use, whichever occurs first. In addition, the Limited Warranty provided by Warrantor covers the steel or aluminum frame structure of the sidewalls (excluding slide outs), roof, and rear and front walls for twelve (12) months from the original retail purchase date or the first 24,000 miles of use, whichever occurs first. A conclusive presumption that your motorhome has been used for commercial and/or business purposes arises if you have filed a federal or state tax form claiming any business tax benefit related to your ownership of the motorhome.

The above Limited Warranty coverage applies to all owners, including subsequent owners, of the motorhome. However, a subsequent owner must submit a warranty transfer form by filing the form through an authorized Holiday Rambler dealer. A subsequent owner's warranty coverage period is the remaining balance of the warranty coverage period the prior owner was entitled to under this Limited Warranty. Warranty transfer forms can be obtained by contacting the Customer Relations Department. There is no charge for the transfer.

### *Limitations of Implied Warranties*

**ANY IMPLIED WARRANTIES ARISING BY WAY OF STATE LAW, INCLUDING ANY IMPLIED WARRANTY OF MERCHANTABILITY AND ANY IMPLIED WARRANTY OF FITNESS FOR A PARTICULAR PURPOSE, ARE LIMITED IN DURATION TO THE TERM OF THIS LIMITED WARRANTY AND ARE LIMITED IN SCOPE OF COVERAGE TO THOSE PORTIONS OF THE MOTORHOME COVERED BY THIS LIMITED WARRANTY.** Warrantor disclaims all implied and express warranties, including the implied warranty of merchantability and the implied warranty of fitness for a particular purpose, on components and appliances excluded from coverage as set forth below. There is no warranty of any nature made by Warrantor beyond that contained in this Limited Warranty. No person has authority to enlarge, amend or modify this Limited Warranty. The dealer is not the Warrantor's agent but is an independent entity. Warrantor is not responsible for any undertaking, representation or warranty made by any dealer or other person beyond those expressly set forth in this Limited Warranty. Some states do not allow limitations on how long an implied warranty lasts, so the above limitation may not apply to you.

### *What the Warranty Covers*

Warrantor's Limited Warranty covers defects in the manufacture of your motorhome and defects in materials used to manufacture your motorhome. Also see the section "What the Warranty Does Not Cover" set out below.

### *What We Will Do to Correct Problems*

Warrantor will repair and/or replace, at its option, any covered defect if: (**1**) you notify Warrantor or one of its authorized servicing dealers of the defect within the warranty coverage period and within five (5) days of discovering the defect; and (**2**) you deliver your Motorhome to Warrantor or Warrantor's authorized servicing dealer at your cost and expense. It is reasonable to expect some service items to occur during the warranty period. The performance of warranty repairs shall not extend the original warranty coverage period. Further, any performance of repairs after the warranty coverage period has expired or any performance of repairs to component parts and appliances excluded from coverage shall be considered "good will" repairs, which shall not alter the express terms of this limited warranty.

Warrantor may use new and/or remanufactured parts and/or components of substantially equal quality to complete any repair.

Defects and/or damage to interior and exterior surfaces, trim, upholstery and other appearance items may occur at the factory during manufacture, during delivery of the motorhome to the selling dealer or on the selling dealer's lot. Normally, any such defect or damage is detected and corrected at the factory or by the selling dealer during the inspection process performed by the Warrantor and the selling dealer. If, however, you discover any such defect or damage when you take delivery of the motorhome, you must notify your dealer or Warrantor within five days of the date of purchase to have repairs performed to the defect at no cost to you as provided by this Limited Warranty.

If either three or more unsuccessful repair attempts have been made to correct any covered defect that you believe substantially impairs the value, use or safety of your motorhome or repairs to any covered defect(s), which you believe substantially impairs the value, use or safety of your motorhome, have taken 30 or more days to complete, you must, to the extent permitted by law, notify Warrantor directly in writing of the failure to successfully repair the defect(s) so that Warrantor can become directly involved in exercising a final repair attempt for the purpose of performing a successful repair to the identified defect(s).

## How to Get Service

The Warranty Registration form must be returned to Warrantor promptly upon purchase to assure proper part replacement and repair of your motorhome. Failure to return the warranty registration form will not affect your rights under the Limited Warranty so long as you can furnish proof of purchase. For warranty service simply contact one of Warrantor's authorized service centers for an appointment, then deliver your motorhome (at your expense) to the service center. If you need assistance in locating an authorized warranty service facility, contact:

**Warrantor's Warranty Department**
**1-877-466-6226**
**91320 Coburg Industrial Way**
**Coburg, Oregon 97408**

In the event the motorhome is inoperative due to malfunction of a warranted part, Warrantor will pay the cost of having the motorhome towed to the nearest authorized repair facility provided you notify Warrantor prior to incurring the towing charges to receive directions to the nearest repair facility.

Because Warrantor does not control the scheduling of service work by its authorized servicing dealers, you may encounter some delay in scheduling and/or in the completion of the repairs.

### *What the Warranty Does Not Cover*

This Limited Warranty does not cover: any motorhome sold or registered outside of the United States or Canada; items which are added or changed after the motorhome leaves Warrantor's possession; items that are working as designed but which you are unhappy with because of the design; normal wear and usage, such as fading or discoloration of fabrics, or the effects of condensation inside the motorhome; defacing, scratching, dents and chips on any surface or fabric of the motorhome, not caused by Warrantor; routine maintenance, including by way of example wheel alignments; the automotive chassis and power train, including, by way of example the engine, drivetrain, steering and handling, braking, wheel balance, muffler, tires, tubes, batteries and gauges; appliances and components covered by their own manufacturer's warranty including, by way of example the microwave, refrigerator, ice maker, stove, oven, generator, roof air conditioners, hydraulic jacks, VCR, television(s), water heater, furnace, stereo, radio, compact disc player, washer, dryer, inverter and cellular phone; or flaking, peeling and chips or other defects or damage in or to the exterior or finish caused by rocks or other road hazards, the environment including airborne pollutants, salt, tree sap and hail.

### *Events Discharging Warrantor from Obligation Under Warranty*

Misuse or neglect, accidents, unauthorized alteration, failure to provide reasonable and necessary maintenance (See Owner's Manual), damage caused by off road use, collision, fire, theft, vandalism, explosions, overloading in excess of rated capacities, and odometer tampering shall discharge Warrantor from any express or implied warranty obligation to repair any resulting defect.

### *Disclaimer of Consequential & Incidental Damages*

**THE ORIGINAL PURCHASER OF THE MOTORHOME AND ANY PERSON TO WHOM THE MOTORHOME IS TRANSFERRED, AND ANY PERSON WHO IS AN INTENDED OR UNINTENDED USER OR BENEFICIARY OF THE MOTORHOME , SHALL NOT BE ENTITLED TO RECOVER FROM WARRANTOR ANY CONSEQUENTIAL OR INCIDENTAL DAMAGES RESULTING FROM ANY DEFECT IN THE MOTORHOME. THE EXCLUSION OF CONSEQUENTIAL AND INCIDENTAL DAMAGES SHALL BE DEEMED INDEPENDENT OF, AND SHALL SURVIVE, ANY FAILURE OF THE ESSENTIAL PURPOSE OF ANY LIMITED REMEDY**. Some states do not allow the exclusion or limitation of consequential or incidental damages, so the above exclusions may not apply to you.

## *Legal Remedies*

**THESE WARRANTIES ARE NOT INTENDED TO "EXTEND TO FUTURE PERFORMANCE" AND ANY ACTION TO ENFORCE THESE EXPRESS OR ANY IMPLIED WARRANTY SHALL NOT BE COMMENCED MORE THAN NINETY (90) DAYS AFTER THE EXPIRATION OF THE RESPECTIVE WARRANTY COVERAGE PERIOD DESIGNATED ABOVE. THE PERFORMANCE OF REPAIRS SHALL NOT SUSPEND THIS NINETY (90) DAY LIMITATIONS PERIOD FROM EXPIRING. THESE TERMS AND ALL EXPRESS AND IMPLIED WARRANTY DISPUTES BETWEEN WARRANTOR AND PURCHASER SHALL BE GOVERNED BY THE SUBSTANTIVE LAWS OF THE STATE OF INDIANA, WITHOUT REGARD TO CONFLICTS OF LAW RULES.** Some states do not allow the reduction in the statute of limitations or a choice of law provision, so the above reduction in the statute of limitations and/or choice of law provision may not apply to you.

**THIS WARRANTY GIVES YOU SPECIFIC LEGAL RIGHTS. YOU MAY ALSO HAVE OTHER RIGHTS, WHICH VARY FROM STATE TO STATE.**

*51903*

## WARRANTY - LIMITED: 2004 ROADMASTER CHASSIS

**ROADMASTER CHASSIS LIMITED WARRANTY**

**What the Period of Coverage Is:**

If you use the Roadmaster Chassis that your motorhome is mounted upon for only recreational travel and family camping purposes, the Limited Warranty provided by Roadmaster ("Warrantor") covers your Roadmaster Chassis for thirty-six (36) months from the original retail purchase date or the first 36,000 miles of use, whichever occurs first.

If you use the Roadmaster Chassis that your motorhome is mounted upon for any rental, commercial or business purposes whatsoever, the Limited Warranty provided by Warrantor covers your new Roadmaster Chassis for Ninety (90) days from the original retail purchase date of the motorhome or the first 24,000 miles of use, whichever occurs first. A conclusive presumption that the Roadmaster Chassis has been used for commercial and/or business purposes arises if you have filed a federal or state tax form claiming any business tax benefit related to your ownership of the motorhome.

### *Limitations of Implied Warranties*

**ANY IMPLIED WARRANTIES ARISING BY WAY OF STATE LAW, INCLUDING ANY IMPLIED WARRANTY OF MERCHANTABILITY AND ANY IMPLIED WARRANTY OF FITNESS FOR A PARTICULAR PURPOSE, ARE LIMITED IN DURATION TO THE TERM OF THIS LIMITED WARRANTY AND ARE LIMITED IN SCOPE OF COVERAGE TO THOSE PORTIONS OF THE ROADMASTER CHASSIS COVERED BY THIS LIMITED WARRANTY.** Warrantor disclaims all implied and express warranties, including the implied warranty of merchantability and the implied warranty of fitness for a particular purpose, on components and appliances excluded from coverage as set forth below. There is no warranty of any nature made by Warrantor beyond that contained in this Limited Warranty. No person has authority to enlarge, amend or modify this Limited Warranty. Any dealer selling a motorhome assembled upon a Roadmaster Chassis is not the Warrantor's agent but is an independent entity. Warrantor is not responsible for any undertaking, representation or warranty made by any dealer or other person beyond those expressly set forth in this Limited Warranty. Some states do not allow limitations on how long an implied warranty lasts, so the above limitation may not apply to you.

### What the Warranty Covers

Warrantor's Limited Warranty covers defects in the manufacture of the Roadmaster Chassis (as defined herein) and defects in materials used to manufacture the Roadmaster Chassis. The term "Roadmaster Chassis" as used herein means only the frame; frame cross members; steering axle, including the axle king pins and bushings; hubs and bearings; brake calipers; rotors, brake backing plates and related parts of the axle; tie rods; drag links; drive shafts, including the U-joints; carrier bearings; and, the axle housing and its internal parts. Also see the section "What the Warranty Does Not Cover" set out below.

### What We Will Do to Correct Problems

**Warrantor will repair and/or replace, at its option, any covered defect if: (1)** you notify Warrantor or one of its authorized servicing dealers of the defect within the warranty coverage period and within five **(5)** days of discovering any such defect; and **(2)** you deliver the Roadmaster Chassis to Warrantor or Warrantor's authorized servicing dealer at your cost and expense. It is reasonable to expect some service items to occur during the warranty period. The performance of warranty repairs shall not extend the original warranty coverage period. Further, any performance of repairs after the warranty coverage period has expired or any performance of repairs to component parts and appliances excluded from coverage shall be considered "good will" repairs, which shall not alter the express terms of this limited warranty.

Warrantor may use new and/or remanufactured parts and/or components of substantially equal quality to complete any repairs.

Defect and/or damage to the Roadmaster Chassis may occur during manufacture at the factory, during delivery of the motorhome to the selling dealer or on the selling dealer's lot. Normally, any factory defect or damage is detected and corrected at the factory or by the selling dealer during the inspection process performed by the Warrantor and the selling dealer. If, however, you discover any such defect or damage when you take delivery of the Roadmaster Chassis, you must notify your dealer or Warrantor within five days of the date of purchase to have repairs performed to any such defect at no cost to you as provided by this Limited Warranty.

If either three or more unsuccessful repair attempts have been made to correct any covered defect that you believe substantially impairs the value, use or safety of your motorhome or repairs to any covered defect(s), which you believe substantially impairs the value, use or safety of your motorhome,, have taken 30 or more days to complete, you must, to the extent permitted by law, notify Warrantor directly in writing of the failure to successfully repair the defect(s) so that Warrantor can become directly involved in exercising a final repair attempt for the purpose of performing a successful repair to the identified defect(s).

## How to Get Service

For warranty service simply contact one of Warrantor's authorized service centers for an appointment, then deliver your Roadmaster Chassis (at your expense) to the service center. If you need assistance in locating an authorized warranty service facility, contact Warrantor's **Warranty Department (1-877-466-6226)**.

**Warranty Department**
**91320 Coburg Industrial Way,**
**Coburg, Oregon 97408**

In the event the Roadmaster Chassis is inoperative due to malfunction of a warranted part, Warrantor shall pay the cost of having the Roadmaster Chassis that the motorhome is mounted upon towed to the nearest authorized repair facility provided you notify Warrantor prior to incurring the towing charges to receive directions to the nearest repair facility.

Because Warrantor does not control the scheduling of service work by its authorized servicing dealers, you may encounter some delay in scheduling and/or in the completion of the repairs.

## What the Warranty Does Not Cover

This Limited Warranty does not cover: modifications and alterations to the Roadmaster Chassis by others; the motorhome that is mounted upon the Roadmaster Chassis, including by way of example the motorhome manufacturer's design, manufacture, assembly and/or installation of the side walls, roof, windows, flooring, electrical system, plumbing system, LP gas system, appliances and slide outs; items that are working as designed but which you are unhappy with because of the design; normal wear and usage; routine maintenance including by way of example wheel alignments; component parts covered by their own manufacturer's warranty, including by way of example the engine, transmission, tires, tubes, batteries, exhaust system and the emission control systems; and, flaking, peeling rusting and chips or other defects or damage in or to the frame and frame cross members caused by rocks or other road hazards and the environment including airborne pollutants and salt.

## Events Discharging Warrantor from Obligation Under Warranty

Misuse or neglect, accidents, unauthorized alteration, failure to provide reasonable and necessary maintenance (See Owner's Manual), damage caused by off road use, collision, fire, theft, vandalism, explosions, overloading in excess of rated capacities, and odometer tampering shall discharge Warrantor from any express or implied warranty obligation to repair any resulting defect.

### *Disclaimer of Consequential & Incidental Damages*

**THE ORIGINAL RETAIL PURCHASER OF THE ROADMASTER CHASSIS AND ANY PERSON TO WHOM THE ROADMASTER CHASSIS IS TRANSFERRED, AND ANY PERSON WHO IS AN INTENDED OR UNINTENDED USER OR BENEFICIARY OF THE ROADMASTER CHASSIS, SHALL NOT BE ENTITLED TO RECOVER FROM WARRANTOR ANY CONSEQUENTIAL OR INCIDENTAL DAMAGES RESULTING FROM ANY DEFECT IN THE MOTORHOME. THE EXCLUSION OF CONSEQUENTIAL AND INCIDENTAL DAMAGES SHALL BE DEEMED INDEPENDENT OF, AND SHALL SURVIVE, ANY FAILURE OF THE ESSENTIAL PURPOSE OF ANY LIMITED REMEDY.** Some states do not allow the exclusion or limitation of consequential or incidental damages, so the above exclusions may not apply to you.

### *Legal Remedies*

**THESE WARRANTIES ARE NOT INTENDED TO "EXTEND TO FUTURE PERFORMANCE" AND ANY ACTION TO ENFORCE THESE EXPRESS OR ANY IMPLIED WARRANTY SHALL NOT BE COMMENCED MORE THAN NINETY (90) DAYS AFTER THE EXPIRATION OF THE RESPECTIVE WARRANTY COVERAGE PERIOD DESIGNATED ABOVE. THE PERFORMANCE OF REPAIRS SHALL NOT SUSPEND THIS NINETY (90) DAY LIMITATIONS PERIOD FROM EXPIRING. THESE TERMS AND ALL EXPRESS AND IMPLIED WARRANTY DISPUTES BETWEEN WARRANTOR AND PURCHASER SHALL BE GOVERNED BY THE SUBSTANTIVE LAWS OF THE STATE OF INDIANA, WITHOUT REGARD TO CONFLICTS OF LAW RULES.** Some states do not allow the reduction in the statute of limitations or a choice of law provision, so the above reduction in the statute of limitations and/or choice of law provision may not apply to you.

•

**THIS WARRANTY GIVES YOU SPECIFIC LEGAL RIGHTS. YOU MAY ALSO HAVE OTHER RIGHTS, WHICH VARY FROM STATE TO STATE.**

**ROADMASTER CHASSIS DIVISION**
**MONACO COACH CORPORATION**
**91320 COBURG INDUSTRIAL WAY**
**COBURG, OREGON 97408**

*02336*

## WARRANTY INFORMATION FILE

In addition to this Owner's Manual you will find a Warranty Information File in your unit. This file contains valuable documents about your motorhome's systems and equipment. Many of the component manufacturer's warranty registration cards can be found in the box. They will need to be filled out and mailed. Be sure you read and understand all the information in this file to help you safely operate, maintain and troubleshoot those items.

### WOOD FINISH

Because no two trees look alike, authentic woods vary in color and character markings such as streaks, knots and grain patterns. Since the stains may attach differently to these grain patterns, some natural light and dark areas may result. The beauty lies in these natural variations of color and grain that give each cabinet its own individual charm.

The beauty of these products is protected with a furniture-quality exterior finish. After a period of time, there may be minimal changes in the finish color as it ages in its surrounding conditions. This is an inherent characteristic of this particular finish, and the natural aging process adds to the unique appearance of the cabinetry. Due to the minor differences in tone, it may not be possible to match the finish color of existing cabinets exactly when replacing doors or adding additional cabinets at a later date.

The foregoing is not a warning. See the Limited Warranty or call (877) 466-6226 for warranty information and limitations.

# The Navigator 2004

## Sections

General Information ~ 1

Driving & Safety ~ 2

Exterior & Interior Care ~ 3

Appliances ~ 4

Equipment ~ 5

Water Systems ~ 6

LP-Gas Systems ~ 7

Electrical Systems - House ~ 8

Electrical Systems - Chassis ~ 9

Chassis Information ~ 10

Index ~ pp 529

# General Information

## Section 1



**SAFETY SYMBOL LEGEND .....15**
**INTRODUCTION .....17**
**CUSTOMER RELATIONS .....18**
**REPORTING SAFETY DEFECTS.....18**
**TAKING DELIVERY.....18**
Holiday Rambler Responsibilities .....18
Dealer Responsibilities.....19
Customer Responsibilities.....19
**SERVICE SUGGESTIONS .....19**
Prepare for the Appointment .....20
Prepare a List .....20
Be Reasonable With Your Requests .....20
No Looking Over the Technician's Shoulder .....20
Inspect the Work Properly.....20
**OWNER'S RECORD.....21**
Serial Numbers .....21
Personal Property .....22
Insurance .....23
**GLOSSARY OF TERMS .....24**
**VENDOR LIST.....28**
**SURVEY .....35**
**LIMITED WARRANTY TRANSFER APPLICATION....37**

The information contained in this document is intended to reflect standard and optional equipment included in a typically equipped model at the time of delivery to the initial retail owner. Your actual unit may vary from this document as a result of optional equipment that is not generally offered on this model. In the case that you are not the initial retail owner of this unit, this document will not reflect modifications that may have been performed by previous owners.

Product information and specifications are shown herein as of the time of printing. The motorhome manufacturer reserves the right to change product specifications, designs and standard equipment without notice and without incurring obligation.

©Copyright Monaco Coach Corporation. All rights reserved. The Navigator® is a registered trademark of Holiday Rambler. All other trademarks or registered trademarks are property of their respective holders. Brand name products of other companies mentioned in this manual are not endorsed by the manufacturer of the motorhome.

*03223*

## SAFETY SYMBOL LEGEND

Indicates a **WARNING**. Information pertaining to personal safety and/or potential extensive or permanent damage to the motorhome.

Indicates a **CAUTION**. Information pertaining to potential damage to the motorhome and/or its components.

Indicates electrical **DANGER**. Information pertaining to danger or caution of potential electrical shock to person(s) or component(s), and/or risk of electrical fire to motorhome.

Indicates **FLAMMABLE** or **EXPLOSIVE**. Information concerning fire or explosive material pertaining to personal safety and/or protection of the motorhome and its components.

Indicates **POISON**. Information pertaining to safety and/or use of a poisonous substance or harmful chemical.

Indicates a **NOTE**. Information and reminders concerning operation of motorhome and/or components.

Indicates **INSPECT**. Inspection of the motorhome and/or its components is required. Additional instruction may follow.

Indicates **LUBE**. Lubrication, or addition of a lubricant product, to the motorhome and/or a specified component or part is required. Additional instruction may follow.

Indicates **ASSEMBLE/REPAIR**. Assembly, disassembly or installation of a component or part, and/or repair to the motorhome may be required. Assistance of Technical Support or Technician may be necessary.

Indicates **INFORMATION**. References to additional information regarding operation of the motorhome and/or its components found in additional sources other than the Owner's Manual. Also refers to the WARRANTY INFORMATION FILE, found within the Warranty Information Box inside the motorhome.

Indicates a **TIP**. Information regarding helpful hints and/or suggestion for ease of operation of the motorhome and/or its components.

This section contains warranty information and knowledge for the operation and care of the motorhome. Not all information may be applicable to your model of motorhome. More detailed information with **CAUTION** or **WARNING** instructions, other than what is found in this chapter, can be found in the manufacturer's owner manuals located in the owner information box.

**Safety Instructions:**

Many of the safety alert symbols are "Personal Safety Instructions." Definitions for the symbols are located on a previous page under "Safety Symbol Legend." It is important to thoroughly read and understand these safety instructions where the symbols are displayed throughout the manual. Failure to comply with specific instructions may result in personal injury or death. Many instructions are required by National Safety Associations.

**Additional Information:**

Changes, additions and supplemental information in the form of Tech Tips and Manual Addendums can be obtained by visiting our Website at **www.monaco-online.com**. Select one of the products from the product lineup. Go to the Service menu. A submenu will appear.

It may also be helpful to browse the “Technical Tips” menu for the other product lines. The tips may not completely apply to your particular model but information contained therein can be useful.

**Out and About in the Motorhome:**

In time you will develop a knack for spotting wonderful little roadside locations by turning off the main highway and exploring. There are many modern recreational vehicle parks (including state, county and federal parks) with good facilities where you can obtain hook-ups for electrical, water and sewage connections. Directories are published which describe these parks and the availability of services and hook-ups. On overnight or weekend trips, chances are you will probably not fill up the sewage holding tanks, deplete the water or LP-Gas supply, or run down the batteries which supply the living area with 12 Volt DC current. On longer trips, when you have stayed where sewer connections and utility hook-ups were not available, it will be necessary to occasionally empty the holding tanks and replenish the water and LP-Gas supply.

Many gas stations have installed sanitary dumping stations. Publications are available which list these dumping stations. When stopped for the night, the motorhome is built to be safely parked in any spot that is relatively level and where the ground is firm. Try to pick as level a parking spot as possible. Your facilities are with you and the motorhome is fully self-contained.

## CUSTOMER RELATIONS

Only by ensuring your confidence and satisfaction with our products and services can we have continued success as a manufacturer of motorhomes. We believe a good relationship with our customers is just as important as improving the technical excellence of our products. Your authorized dealer is pleased to help you with instructions about your motorhome and to offer service when you need it. If problems remain after you have consulted your dealer you are invited to contact our Customer Service Department. Please have all pertinent information (serial numbers, model number, etc.) when calling. We will work with the dealer and see that every attempt to resolve the matter is made.

**Customer Service Department**
**91320 Coburg Industrial Way**
**Coburg, Oregon 97408**
**877-466-6226**

## REPORTING SAFETY DEFECTS

If you believe that your motorhome has a defect which could cause a crash or could cause injury or death, you should immediately inform the National Highway Traffic Safety Administration (NHTSA) in addition to notifying Monaco. If NHTSA receives similar complaints, it may open an investigation, and if it finds that a safety defect exists in a group of motorhomes, it may order a recall or remedy campaign. However, NHTSA cannot become involved in individual problems between you, your dealer or Monaco. To contact NHTSA you may either call the Auto Safety Hot line toll-free at 1-800-424-9393 (or 1-202-366-0123 in the Washington D.C. area) or write to:

**NHTSA**
**U.S. Department of Transportation**
**400 Seventh Street**
**Washington, DC 20590**
**www.nhtsa.dot.gov**

## TAKING DELIVERY

### *Holiday Rambler Responsibilities*

Your motorhome has been manufactured to the highest quality and standards by factory trained personnel. Quality inspections are performed throughout the manufacturing process of your motorhome. The motorhome has been carefully and almost completely hand assembled in our factory. Prior to the motorhome arriving at the dealership, all systems have been carefully tested and inspected to ensure optimum performance. The necessary forms and required manuals have been placed in the motorhome at the time of shipment to the dealership.

### Dealer Responsibilities

The dealer must perform additional pre-delivery inspections and system checks, assist in the customer's understanding of the Limited Warranty and assist in completing any necessary forms. They must do a customer orientation to the motorhome, its systems, components and their operation.

The dealer should also ensure the customer receives a complete Owner's Packet with warranty cards and registrations for the motorhome and for separately warranted products, including detailed operating and maintenance instructions. The dealer is responsible for performing a review of the Limited Warranty provisions with the customer, while stressing the importance of mailing warranty cards and registrations to the manufacturers within the prescribed time limit to avoid loss of warranty coverage. They must assist the customer in completing these forms and locating serial numbers. They should request that the customer reads all warranty information when possible and explain any provision not clearly understood.

The dealer should instruct the customer on how to obtain local and out-of-town service on the motorhome and its various individual warranted components, whether the service is warrantable or out of warranty.

### Customer Responsibilities

As a new motorhome owner you are responsible for regular and proper maintenance. This will help you prevent conditions arising from neglect that are not covered by your Limited Warranty. Maintenance services should be performed in accordance with this Owner's Manual, and any other applicable manuals. As the owner, it is your responsibility and obligation to return the motorhome to an authorized dealer for repairs and service (See the Limited Warranty). Since the authorized dealer where you purchased your new motorhome is responsible for its proper servicing before delivery, and has an interest in your continued satisfaction, we recommend that Inspection, Warranty and Maintenance Services be performed by the dealership. We suggest that you take your new motorhome on a weekend shakedown before leaving on an extended trip.

## SERVICE SUGGESTIONS

Know when to take your motorhome in for service. Give some thought to the appointment time. There are several things to consider when selecting a time for service. Location of the service center and the time of year can be a major issue. Monday and Friday are busy days for most dealers. Therefore, it makes sense to make a mid-week appointment whenever possible. Ask your dealer if additional time is needed for check in and completion of paperwork.

### Prepare for the Appointment

If you're having warranty work done, be sure to have your warranty registration papers with you. All work to be performed may not be covered by the warranty; be sure to discuss additional charges with the service manager. Keep a maintenance log of your motorhome service history. This can often provide a clue to the current problem.

### Prepare a List

Make a written list of specific repairs needed. It is important the service manager be aware of all previous work which has been done on your motorhome. For example: if the motorhome has been repaired due to an accident. While this may not seem important, it could have a significant effect on the dealer's diagnosis of a problem.

### Be Reasonable With Your Requests

Do not leave a list of 20 items to be serviced and expect to have the motorhome back by 5:00 p.m. If you list a number of items, and must have your motorhome back by the end of the day, discuss the situation with the service manager and list items in order of priority. Some items may not be able to be repaired due to work loads or parts availability. Expect to make a second appointment for work not completed or for the long, drawn-out repair item.

### No Looking Over the Technician's Shoulder

Please do not be offended when you are told you cannot watch the work being done. Many service area insurance requirements forbid the admission of customers into the service work area.

### Inspect the Work Properly

Check out the service or repair job when you pick up your motorhome and notify the service manager of any dissatisfaction. If circumstances prevent returning for immediate corrective work, make an appointment as soon as possible.

## FOR YOUR OWN REFERENCE

# OWNER'S RECORD - SERIAL NUMBERS

**INFORMATION: Many of the serial numbers for various items and components are filed on the Data Card located in the Warranty Information File box. Refer to the Manufacturer's individual Owner's Manuals for serial number locations that are not listed below.**

**Motorhome** Serial Number _____

**Motorhome** Federal Vehicle Identification Number (VIN) _____

**Entry Door Key** Number _____

**Compartment Door Key** Number_____

**Cooktop/Range** Model & Serial Number _____
(Located under top burner plate)

**Microwave** Model & Serial Number_____
(Located behind door on case)

**Refrigerator** Model & Serial Number _____
(Located inside refrigerator compartment)

**Generator** Model & Serial Number_____
(Located in outside compartment on generator)

**Roof Air Conditioner(s)** Model & Serial Number_____
(Located under top cover on air conditioner)_____

**Inverter** Model & Serial Number_____

FOR YOUR OWN REFERENCE

# OWNER'S RECORD - PERSONAL PROPERTY

| Item | Serial Number | Value |
| --- | --- | --- |
| | | |
| | | |
| | | |
| | | |
| | | |
| | | |
| | | |
| | | |
| | | |
| | | |
| | | |
| | | |
| | | |
| | | |
| | | |
| | | |
| | | |
| | | |

FOR YOUR OWN REFERENCE

# OWNER'S RECORD - INSURANCE

Company: _____

_____

Policy #: _____

_____

Agent's Name & Address: _____

_____

Business Phone #: _____

_____

Emergency Phone #: _____

_____

Renewal Date(s): _____

_____

Notes: _____

_____

_____

_____

_____

_____

## GLOSSARY OF TERMS

**AC Electricity -** Alternating current also known as household power.

**Air Compressor -** Pumps air to and builds air pressure in an air system.

**Air Dryer -** Cools, filters and dries the air delivered by an air compressor.

**Air Governor -** Controls the operation of the air compressor by constantly monitoring air pressure in the supply tank of the air system. The air governor initiates the unload cycle when the cut-out pressure is reached. The air governor also controls the air dryer by sending an air signal (at the beginning of the compressor unload cycle) to the control port of the air dryer, initiating the purge cycle. When this air signal is removed by the governor (at the beginning of the compressor load cycle) the purge valve closes and the drying cycle begins.

**Ampere (Amp) -** The unit of measure of electron flow rate of current through a circuit.

**Ampere-hour (Amp-hr. AH) -** A unit of measure for a battery electrical storage capacity, obtained by multiplying the current in amperes by the time in hours of discharge. (Example: A battery which delivers 5 amperes for 20 hours, delivers 5 amperes times 20 hours, or 100 Amp-Hr. of capacity.)

**Black Water -** Term associated with the sewage holding tank. The toilet drains directly into this tank.

**Chassis Battery -** Powers chassis 12 Volt accessories and starts engine.

**Circuit -** An electric circuit is the path of an electric current. A closed circuit has a complete path. An open circuit has a broken or disconnected path.

**City Water -** A term associated with the water supply that you hook-up to at campgrounds. It is called city water because water is pulled from a central source (like in a city) and not the fresh water tank.

**Compressor Load Cycle -** The time during which the air compressor is building air pressure in an air system.

**Compressor Unload Cycle -** The time during which the air compressor is idling and is not building air pressure in an air system.

**Curbside -** This refers to the side of the motorhome which faces the curb when it is parked. Often called the door side or the passenger's side.

**Current - Alternating (AC) -** A current that varies periodically in magnitude and direction. A battery does not deliver alternating current. Also referred to as shore power, utility power, inverter power, generator power, etc.

**Current -** The rate of flow of electricity or the movement rate of electrons along a conductor. It is comparable to the flow of a stream of water. The unit of measure for current is the ampere.

**Cut-In Pressure -** The pressure level in the air system supply tank which triggers the compressor load cycle.

**Cut-Out Pressure -** The pressure level in the air system supply tank which triggers the compressor unload cycle.

**Cycle -** In a battery, one discharge plus one recharge equals one cycle.

**DC Electricity -** Direct current also known as battery power.

**Desiccant -** A granular substance that has a high affinity for water and is used to retain moisture from the air stream flowing through the air dryer cartridge.

**Direct Current (DC) -** Power that is stored in a battery bank or supplied by photovoltaics, alternator, chargers and DC generators.

**Drain Trap -** This is a curve that is in all drains. Water is trapped in the curve and this creates a barrier so tank odors cannot escape through the drain.

**Dry Camping -** Camping in the motorhome when there is no city water hook-up or shore power. In other words, using only the water and power that is in the motorhome and not from another source.

**Drying Cycle -** The time during which the air dryer cools, filters and removes moisture from the air delivered by the air compressor. The drying cycle begins and ends the same as the compressor load cycle.

**Dump Station -** A site where the waste (grey) and sewage (black) tanks can be drained. In most states it is illegal to drain waste tanks anywhere other than at a dump station.

**Dump Valve -** Another name for the T-handle valve used to drain the sewage (black) and waste (grey) tanks.

**Egress Window -** The formal name for the emergency window located in the rear of the motorhome. Egress windows can be easily identified by their red handles.

**Full Hook-Up Site -** A campground that has city water, shore power and sewer hook-ups or connections available.

**Grey Water -** Term associated with the waste water holding tank. Water from the sink drains, the shower and the washer/dryer (if equipped) go into this tank.

**House Battery -** Powers 12 Volt lights and accessories inside motorhome.

**LED -** (Light Emitting Diode) Indicator light.

**Low Point Drain -** The lowest point in the plumbing. Drains are placed here so that water will drain out of the lower end of the motorhome. These drains must be closed when you fill the water tank.

**OHM -** A unit for measuring electrical resistances.

**Ohm's Law -** Express the relationship between Volt (E), amperes (I) in an electrical circuit with resistance (R). It can be expressed as follows: E = IR. If any two of the three values are known, the third value can be calculated by using the above formula.

**Pounds Per Square Inch Gauge (psig) -** Pressure measured with respect to that of the atmosphere. This is a pressure gauge reading in which the gauge is adjusted to read zero at the surrounding atmospheric pressure. It is commonly called gauge pressure.

**Purge -** The initial blast of air (decompression) from the air dryer purge valve at the end of the air compressor cycle.

**Purge Cycle -** The time during which the air dryer is undergoing purge and regeneration. This cycle starts at the beginning of the compressor unload cycle and normally ends well before the beginning of the compressor load cycle.

**Regeneration -** The mild backflow of air through the air dryer and out the purge valve that begins immediately after the purge and lasts normally 10 to 15 seconds. This backflow of air, from the air system and through the air dryer, removes moisture from the desiccant cartridge and prepares the air dryer for the next compressor load cycle.

**Roadside -** This refers to the side of the motorhome which faces the road when it is parked. Often called the off-door side or the driver's side.

**Shore Line -** This is the electrical cord which runs from the motorhome to the campground 120 Volt electrical supply.

**Shore Line Plug -** The 120 Volt outlet allows the motorhome to be hooked up to a campground facility.

**Stinger -** An arm attachment on a tow truck that is used to lift motorhome slightly so that it can be towed.

**VIM -** Vehicle Interface Module.

**Volt -** The unit of measure for electric potential.

**Watt -** The unit for measuring electrical power, i.e. the rate of doing work, in moving electrons by or against an electric potential.

**Wet Cell Battery -** A type of battery that uses liquid as an electrolyte. This type of battery requires periodic maintenance such as cleaning the connections and checking the electrolyte level.

## VENDOR LIST

**Air Bags**
Firestone
317-818-8600
www.bridgestone-firestone.com

**Air Conditioner - Dash**
SCS/Frigette
800-545-6341
www.scsfrigette.com

**Air Conditioner - Roof**
Dometic Corp.
800-544-4881
www.dometic.com

**Air Filter**
Donaldson
(612) 887-3131
www.donaldson.com

**Aladdin/VCM**
Monaco coach Corporation
Technical Support
877-466-6226

**Alternator**
Leece-Neville
800-346-8093
www.prestolite.com

**Aqua-Hot (Optional)**
Vehicle System
800-685-4298
www.hydro-hot.com

**Awnings**
Carefree
800-621-2617
www.carefreeofcolorado.com

**Awnings (Optional)**
Girard Systems
800-382-8442
www.girardrv.com

**Axles**
Eaton Corporation
800-826-4357
www.truck.eaton.com

**Batteries**
Interstate
800-272-6548
www.interstatebatteries.com

AGM (All-Electric)
Lifeline Distributors Inc.
800-527-3224
www.lifelinebatteries.com

**Brakes-Anti-Lock Brake System**
Eaton
800-826-4357
www.truck.eaton.com

**Brakes-Automatic Traction Control**
Eaton
800-826-4357
www.truck.eaton.com

**Carbon Monoxide Detector**
Safe-T-Alert
800-383-0269
www.safe-t-alert.com

**Citizen Band Radio**
Cobra
733-889-3087
www.cobraelec.com

**Cooktop (Electric and LP-Gas)**
Seaward Products (110 Volt)
562-699-7997
www.seawardproducts.com

Kitchenaid (LP-Gas)
800-422-1230
www.kitchenaid.com

**Dash Radio**
Panasonic
800-211-7262
www.panasonic.com

**Dishwasher**
Fisher/Paykel
1-800-863-5394
www.fisherpaykel.com

**Drapery Motor**
Somfy
800-637-6639
www.somfysystems.com

**DVD Player**
Sony
800-222-7669
www.sony.com

**Engine**
Cummins
800-343-7357
www.cummins.com

Detroit Diesel
800-445-1980
www.detroitdiesel.com

**Entertainment Center - Bedroom**
Fisher
800-421-5013
www.sanyoservice.com

**Entry Step**
Kwikee
800-736-9961
www.kwikee.com

**Fan - Bathroom Exhaust**
Fan-Tastic Vent
800-521-0298
www.fantasticvent.com

**Faucet**
Moen Faucets
800-289-6636
www.moen.com

**Filters - Coolant**
Fleetguard
800-223-4583
800-22Filter
www.fleetguard.com

Racor Fluid Filters
800-344-3286
www.parker.com/racor/

Detroit Power Cool
800-445-1980
www.detroitdiesel.com

**Filters - Engine**
Racor Fluid Filters
800-344-3286
www.parker.com/racor/

Fleetguard
800-223-4583
800-22Filter
www.fleetguard.com

Detroit Power Guard
800-445-1980
www.detroitdiesel.com

**Filters - Fuel**
Fleetguard
800-223-4583
800-22Filter
www.fleetguard.com

Racor Fluid Filters
800-344-3286
www.parker.com/racor/

Fuel Pro -
Detroit Diesel
800-445-1980
www.detroitdiesel.com

**Filters - Hydraulic**
Racor Fluid Filters
800-344-3286
www.parker.com/racor/

**Filters - Oil**
Fleetguard
800-223-4583
800-22Filter
www.fleetguard.com

Power Guard -
Detroit Diesel
800-445-1980
www.detroitdiesel.com

**Fire Extinguisher**
First Alert
800-323-9005
www.firstalert.com

**Freezer - Bay (Optional)**
Norcold
800-543-1219
www.norcold.com

**Fuel Sender**
Centroid Products
800-423-3574
www.centroidproducts.com

**Generator**
Onan
800-888-6626
www.onan.com

**Home Theater**
Sony
800-222-7669
www.sony.com

**Ice Maker (Optional)**
U-Line
800-779-2547
www.u-line.com

**Insta Hot (Optional)**
Insinkerator
800-558-5700
www.insinkerator.com

**Inverter**
Xantrex
360-435-8826
www.traceengineering.com

**Keyless Entry**
Essex Electronics
800-539-5377
www.keyless.com

**Leveling Jacks - Hydraulic (Optional)**
RVA
760-746-5732

**Leveling System - Air**
HWH Corporation
800-321-3494
www.hwhcorp.com

**Liquefied Petroleum Protectors**
MTI Industries, Inc.
800-383-0269
www.mtiindustries.com

**LP Tank**
Brunner
574-534-9328
www.mantank.com

**Manabloc Water Manifold**
Vanguard Pipe
800-775-5039
www.vanguardpipe.com

**Microwave**
Sharp Electronics Corp.
800-237-4277
www.sharp-usa.com

**Mirror (Ceiling)**
Wilsonart
800-433-3222
www.wilsonart.com

**Navigation System**
Mito Corporation
800-433-6486
www.mitocorp.com

**Outside Mirrors**
Velvac Mirror
800-783-8871
www.velvac.com

**On Star (Optional)**
River Park
1-800-442-7717
www.riverparkinc.com

**Power Cord Reel**
TDI
866-713-1489
www.tdiproducts.com

**Rear Vision System**
Mito Corporation
800-433-6486
www.mitocorp.com

**Refrigerator (Standard)**
Norcold
800-543-1219
www.norcold.com

**Refrigerator (All-Electric)**
Whirlpool
800-253-1301
www.whirlpoolcorp.com

**Safe (Optional)**
Allied Safe
800-448-8338
www.alliedsafe.com

**Satellite Radio (Optional)**
Sirus
1-888-539-7474
www.siriusradio.com

**Satellite System**
KVH
888-584-4163
www.kvh.com

Tracstar
407-650-9054
www.tracstar.com

**Security System**
Viper
Directed Electronics Inc.
800-876-0800
www.directed.com

**Shock Absorbors**
Bilstein
800-537-1085
www.bilstein.com

**Slide-Out Motor - Electric (Bedroom)**
Power Gear
800-344-4712

**Slide-out Motor - Hydraulic**
HWH Corporation
800-321-3494
www.hwhcorp.com

**Solar Panels**
RV Solar Consultants
541-937-9812
www.amsolar.com

**Steering Gear**
TRW
615-444-6110
www.trw.com

**Steering Wheel (Smart Wheel)**
Vehicle Improvement Products
847-395-7250
www.vipwheels.com

**Storage Trays**
Kwikee
800-736-9961
www.kwikee.com

**Television - LCD**
Sharp
800-237-4277
www.sharp-usa.com

**Television - Plasma (Optional)**
Sony
800-222-7669
www.sony.com

**Television Antenna**
Winegard
800-288-8094
www.winegard.com

**Tires**
Goodyear Tire & Rubber
800-321-2136
www.goodyear.com

**Toilet**
Sealand
800-321-9886
www.sealandtechnology.com

**Transfer Switch**
ESCO
574-264-4156

**Transmission**
Allison Transmission
800-524-2303
www.allisontransmission.com

**Under Sink Filters**
Premier/Watts
888-774-7405
www.wattspurewater.com

Everpure
1-847-205-6000
www.everpure.com

**Universal Remote**
Mito Corporation
800-433-6486
www.mitocorp.com

**Vorad**
Eaton Corp
800-826-4357
www.truckeaton.com

**Washer/Dryer (Optional)**
Splendide
800-356-0766 ext. 5
www.splendide.com

**Water Pump**
Aquatec
800-975-9995
www.aquatec.com

**Wheels - Aluminum**
Accuride
800-626-7096
www.accuridecorp.com

**Windshield Wipers**
Diesel Equipment
800-632-4959
www.dieselequipment.com

## MANUAL ADDENDUMS

**www.monaco-online.com**

Click on **Holiday Rambler** Logo to enter the main web page.
Under the **SERVICE** tab, choose
**MANUAL ADDENDUMS** from the drop down menu.

## TECH TIPS

Find current and archived tech tips with answers
to frequently asked questions at:

**www.monaco-online.com**

Click on **Holiday Rambler** Logo to enter the main web page.
Under the **SERVICE** tab, choose
**Tech Tips** from the drop down menu.

# Navigator 2004

Your suggestions are very important to us and we are continually striving to improve the quality of our manuals. After becoming familiar with your new recreational vehicle and the accompanying manual, please take the time to answer the following questions. When you are finished please return the survey via mail to our Technical Publications Department, or you may fax the survey to (541) 681-8031, Attention: Technical Publications Department. Feel free to attach an additional page if you desire.

**1. Is this your first recreational vehicle? YES / NO**

**2. Was the overall appearance and lay-out of this manual what you expected to see in your new recreational vehicle?**

_____
_____
_____
_____
_____

**3. Was the information within this manual helpful in acquainting you with your new recreational vehicle? If not please address any area(s) we need to expand or improve on.**

_____
_____
_____
_____
_____

**4. Were the operating instructions clearly written, and were you able to follow the steps without any difficulty?**

_____
_____
_____
_____
_____

**5. Is there any additional information you would like to see incorporated within the owner's manual?**

_____
_____
_____
_____
_____

**NAME:** _____ **PHONE:** (_____)_____

**ADDRESS:** _____

**SERIAL #** _____

CUT ALONG DOTTED LINE

FOLD

Place
Postage
Here

**TECHNICAL PUBLICATIONS PLT #17**
**MONACO COACH CORPORATION**
**91320 COBURG INDUSTRIAL WAY**
**COBURG, OR 97408-9908**

FOLD

CUT ALONG
DOTTED LINE

# Limited Warranty Transfer Application

Mail Monaco Coach Limited Warranty Transfer Application to:

Monaco Coach Corporation
Warranty Transfer
91320 Coburg Industrial Way
Coburg, OR 97408

Please read terms and representations below before signing.

DEALER IMPRINT

**A** PRIOR OWNER INFORMATION

TRANSFER COVERAGE FROM:

FIRST NAME | INITIAL | LAST NAME | VEHICLE IDENTIFICATION NUMBER

**B** NEW OWNER INFORMATION

TRANSFER COVERAGE TO:

FIRST NAME | INITIAL | LAST NAME | TELEPHONE NUMBER

STREET ADDRESS | DATE OF TRANSFER

CITY | STATE | ZIP | ODOMETER READING AT TRANSFER

**C** SIGNATURES

NEW OWNER'S SIGNATURE | SELLING DEALER SIGNATURE

## TERMS & REPRESENTATIONS

By your signature(s) on this form, and in order to induce Monaco Coach Corporation to transfer its Limited Warranty, you represent the following:

1. That you have received and read a copy of the Limited Warranty.
2. You understand that the unit is to be used only for family camping and cross country travel on improved roads.
3. All information provided by you on this form is true and correct.
4. You understand that you are purchasing a pre-owned recreational vehicle and Monaco Coach Corporation does not make any representation as to its present condition.
5. You understand that the Limited Warranty does not cover the chassis, component parts and appliances if they are covered by a separate warranty issued by the chassis, component part or appliance manufacturer.

# Driving & Safety
## Section 2




**DRIVING & SAFETY.....41**
Inspections.....41
Familiarize Yourself.....41
Mirror Adjust (Manually).....41
Safety Seat Belts.....43
Driving Tips.....46
**PRE-TRIP PREPARATIONS - CHECKLIST.....52**
**HITCH.....55**
Using the Rear Receiver.....55
Tow Plug Connection.....56
**REAR VIEW SYSTEM.....57**
See Vision (Opt.).....58
**BACKING UP A MOTORHOME.....59**
**SET-UP PROCEDURES - CHECKLIST.....61**
**DRY CAMPING.....63**
**BREAKING CAMP.....68**
**EMERGENCY PROCEDURES - ROADSIDE.....70**
In Case of Flat Tire.....70
OnStar® System (Opt.).....71
Light - Retractable.....72
Low Fuel - Priming the Fuel System.....72
Jump Starting.....73
**TOWING PROCEDURES.....76**
Brake - Disabling Parking Break.....77
**TIRES.....78**
Importance of Air Pressure.....78
Tire Pressure Inflation Guideline.....79
Tire Chart - Goodyear.....80
Tire Chart - Michelin.....81
Inspecting & Pressure.....82
Air Pressure Checklist.....84
Supporting When Leveling.....85
Tire Vibration.....86
Tire Rotation.....86
Tread.....86
Tire/Wheel Care.....87
Storage of Tires - Long Term.....89
**WEIGHING THE MOTORHOME.....90**
Weight Label (Example).....95
Six-Point Weighing (Example).....96
**VIEWS.....106**
Front.....106
Rear.....106
Roadside.....107
Curbside.....107
**SPECIFICATIONS - DIMENSIONS CHART.....108**
**SMOKE DETECTOR.....108**
Operation.....109
Testing.....109
Maintenance.....109
Troubleshooting.....109
**LP-GAS DETECTOR.....110**
Testing.....111
Alarm.....111
Maintenance.....112
**CARBON MONOXIDE DETECTOR.....112**
Operation.....114
Alarm.....114
Testing.....115
Cleaning.....115
Troubleshooting.....115
**FIRE EXTINGUISHER.....116**
**EGRESS EXIT WINDOW.....116**
**SECURITY SYSTEM (Opt.).....117**
**SAFE.....123**

# DRIVING & SAFETY

Section two contains information on driving tips, emergency situations, towing, safety devices, weighing the motorhome and tires.

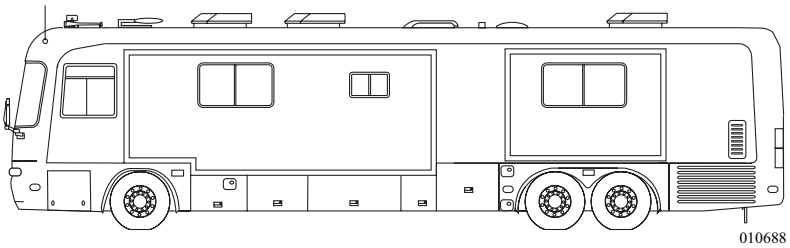


## *Inspections*

There are significant differences between a passenger automobile and a motorhome. Always be aware of these differences when traveling. The key to safely operating a motorhome is inspection. Any defect found could result in problems on the road that may cause lost time and money. Several states require that the motorhome be inspected prior to registration. Know and observe the laws of the states in which you will be traveling. Laws may vary from state to state. A systematic inspection conducted prior to moving the motorhome will ensure nothing is overlooked and will assist in familiarizing the owner with the motorhome. Prior to moving the motorhome perform a general **inspection** which includes examining the condition of the vehicle and the surrounding area of the motorhome for hazards. Look high and low when walking around the motorhome.

## *Familiarize Yourself*

The location of the driver's seat in the motorhome is higher and farther to the left than most vehicles. This creates a different perspective of the roadway. Rely on the outside mirrors to line up with the center of the road and to check the conditions behind the motorhome. The dashboard may contain more gauges and controls than are normally found in passenger automobiles. Become familiar with these gauges and their indications before starting out.

## *Mirror Adjust (Manually)*

The mirrors will need to be adjusted before starting out, it is recommended that you have someone assist with these procedures. This will also prevent any damage to mirror or coach.

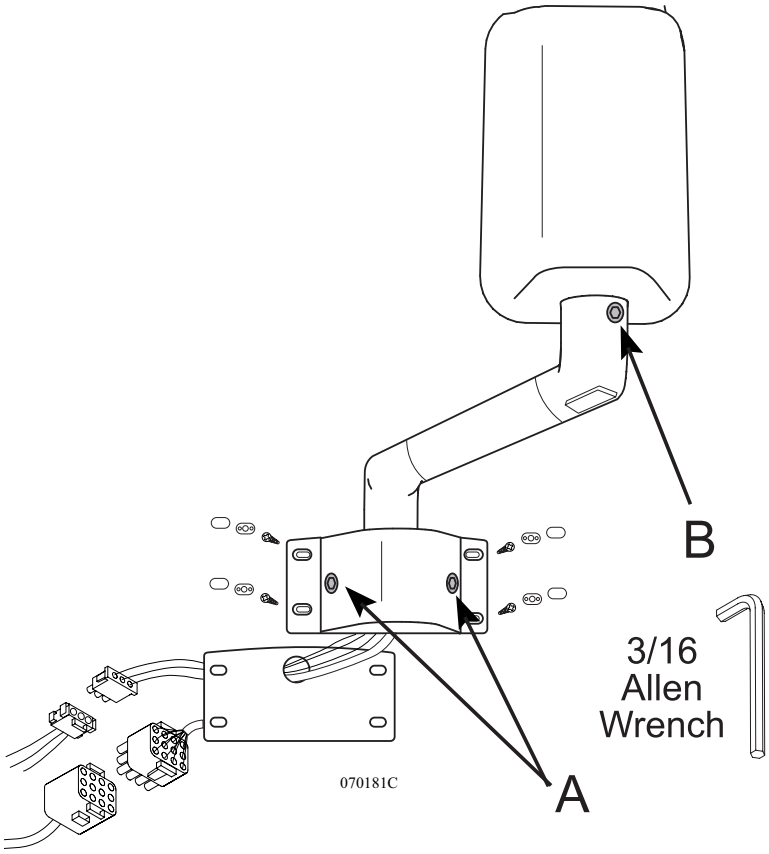


**Mirror Adjusting:**

- Tools needed: 3/16” Allen wrench.
- Adjust the driver's seat to the travel position.
- Using an "Allen wrench" have the assistant loosen the two 3/16" Allen set screws located at the base of the mirror. (See point "**A**" on the drawing).
- Adjust the mirror so that there is a clear side view of the coach.
- Tighten the two base screws once the proper adjustments are made.
- To adjust the "head" of the mirror, loosen the screw located above the turn signal shown on point "**B**". Now adjust the head of the mirror to the left or right.
- Make sure all Allen set screws are tight.

**NOTE: Use the mirror adjust switches located on the road side console to fine tune the view.**

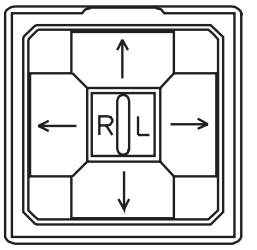


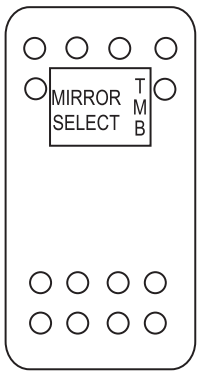

## Safety Seat Belts

All occupants must be furnished with and use seat belts while the motorhome is moving. The driver's seat, and all other seats designed to carry passengers while the motorhome is in motion, are equipped with safety seat belts. Do not occupy beds or any seats that are not equipped with a safety belt while the motorhome is in motion. Safety belts are supplied at affixed seating positions. The driver's seat must be locked in the forward facing position while motorhome is in motion. Do not use a seat belt on more than one person.

To fasten the seat belt, pull the belt out of the retractors and insert the tab into the buckle; you will hear a click when the tab locks into the buckle. Seat belt lengths automatically adjust to your size and sitting position. Do not route belts over armrest.

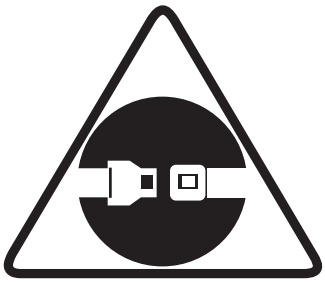

SEATBELT.EPS

**WARNING: Safety belts are supplied at affixed seating positions. Do not occupy seats not equipped with safety belts while the motorhome is in motion. Do not use a single seat belt on more than one person. Pilot and Co-pilot seats must be locked in a forward facing position with seat belts fastened while the motorhome is in motion. Avoid seat rotation while in transit.**

**Child Safety Seat:**

Children that fit into **Example 1** and **Example 2** require the use of a child safety seat. In the motorhome, the child safety seat can be positioned in two places. On the front passenger (co-pilot) seat and on the forward facing permanently mounted booth dinette seat.

**WARNING: Children must not be transported unrestrained. Infants must be placed in approved safety seats. Small children must be restrained in child safety seats. Failure to comply with these rules can lead to injury or death.**

**NOTE: Individual states and Canadian provinces may prohibit use of a safety or booster seat in the front seat.**

**A child safety seat is required for a child:**

- From birth to one year, or up to 21 pounds, the child is considered an infant. A (convertible) safety seat for an infant must be secured facing rearward. The top of the head must be below the top of the safety seat. Secure safety seat harness straps at or below the shoulders. (**See Example 1**).

- Children over 40 pounds (ages 4 to 8) unless over 4' 9" require a booster seat. The booster seat places the child's waist and shoulders at the proper height for the supplied safety belt to be effective. The top of the head must be below the top of the safety seat. (**See Example 2**).

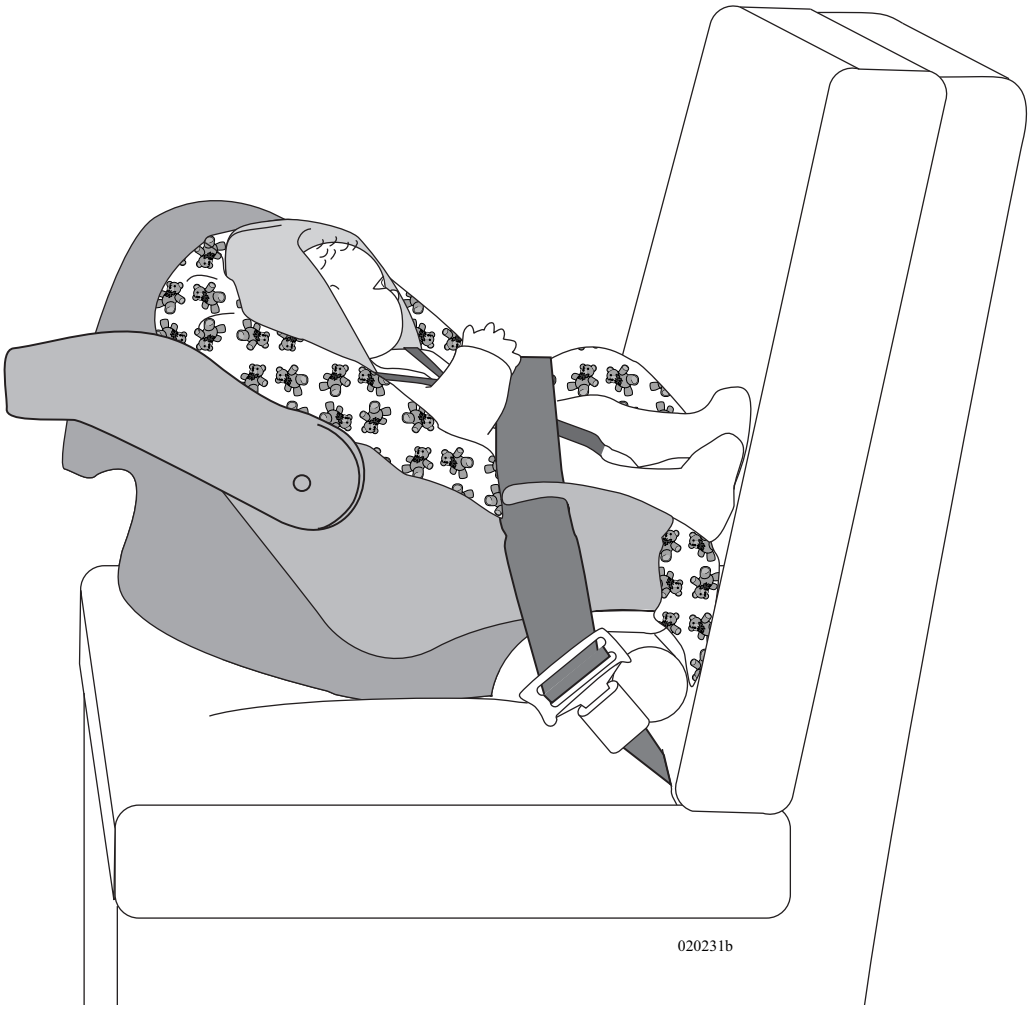


***Example 1: Convertible Seat Facing to the Rear.***

*Example 2: High back booster seat facing forward.*

**CAUTION: Installation illustrations are for reference only, and are not to be used as a guide. Refer to the safety seat manufacturer's guide.**

**WARNING: Because there are many styles of safety and booster seats, refer to the manufacturer's manual for proper installation and how to properly secure the safety or booster seat.**

**CAUTION: Seat belts must only be used on permanently mounted seats. Do not use a single seat belt on more than one person.**

**NOTE: Individual states and Canadian provinces may have laws that can exceed the requirements described above. It is your obligation to know and comply with the laws in the state or province in which you travel.**

**Seat Belt Care:**

Keep the belt clean and dry. To clean, use a mild soap and lukewarm water. Never use bleach, dye or abrasive cleaners as they may weaken the belt. Inspect the belts periodically. Check for cuts, frays or loose parts. Replace any damaged parts. Do not disassemble or modify the system. Replace the belt assembly if it has been in a severe impact, even if damage is not obvious.

## *Driving Tips*

downhill.eps

The motorhome is a complex vehicle and requires an increased level of driving awareness because of its size and various components. Due to the motorhome length the turning radius will be much wider than that of a standard automobile. Always pay close attention to all perimeters of the motorhome: front, sides, rear, roof and undercarriage. Insure the surrounding area is clear of obstacles. Utilize the driving mirrors to observe traffic conditions as well as the motorhome exterior: tires, bay doors, blind spots, etc. Use a push-pull method of steering, with both hands parallel on the steering wheel. The motorhome is also heavier than an automobile with a higher center of gravity. These factors affect the reaction time of the motorhome. Swerves and sharp turns, especially performed at high speeds, could result in the loss of control of the motorhome. Keep the size of the motorhome in mind and drive with extra caution to avoid situations which might require quick momentum changes. Increase reaction time by paying attention to traffic and road conditions 12-15 seconds ahead of the motorhome's position.

The motorhome will travel safely and comfortably at highway speed limits. However, it takes more time to reach highway speed. When passing another vehicle, allow extra time and space to complete the pass due to the added length of the motorhome. When descending a long hill, use the exhaust or engine brake. The transmission and engine will help control downhill speed and can extend the service life of the brake lining. The distance required to stop the motorhome is greater than an automobile. The brakes are designed for the (GVWR) Gross Vehicle Weight Rating. Practice stopping away from traffic to get the "feel" of the distance required to stop the motorhome.

When backing up, have the co-pilot stand at the road side rear corner so the co-pilot remains visible in the roadside mirror. The co-pilot can watch for any obstacles and give hand signals during the backing up process.

When traveling, make sure bridges being crossed can support the weight of the motorhome. Check the tonnage limit of the bridges before crossing them. Signs should be posted at bridge entrances. Check the posted height of all overpasses or situations where overhead clearance is limited. Keep in mind, road surfaces may have been repaved or become packed with snow and therefore the actual posted clearance height would not apply in such conditions.



**Driving Cautions:**

- Avoid getting too close to the edge of the road, a soft shoulder may not support the weight of the motorhome.
- Side spacing is best maintained by keeping the motorhome centered in the driving lane.
- Driving lanes in work zones can be uneven, congested and narrower than usual.
- Be cautious of road debris which can damage the undercarriage of the motorhome or become lodged in the dual tires causing damage to the tires, wheel rims or tow car.
- Keep in consideration that posted speed signs are passenger automobile rated. Therefore, an extra awareness of the driving conditions and appropriate speed for a motorhome are necessary, especially on corners and mountain roads.
- Downgrade speed should be at least 5 mph less than upgrade speed, or downgrade speed should be attainable within three seconds of a brake application.
- Use a four second rule when following other vehicles at speeds under 40 mph. Use a five second rule when following at speeds over 40 mph.

**Left Turns:**

- Do not start the turn until the center of the intersection is reached with your hips. If there are two lanes available, take the right hand lane. A car or driver on the left hand side is easier seen.

**Right Turns:**

Negotiating a right hand turn in a motorhome can be difficult. Many drivers fear they can not make the turn without entering into the other lane or jumping the curb. Here are a few tips to make a right hand turn easier:

- As the turn approaches, look into the mirror to ensure the lane to the left is clear, then move wide over to the left.
- When you are about to make the turn; the left rear wheel should touch the center line of the road and your hips should be parallel to the roadside curb of the corner being turned. This will aid in avoiding a premature turn.
- Make the turn slowly.
- Check mirrors frequently, being aware of necessary clearance and space management of the motorhome, while negotiating the turn.

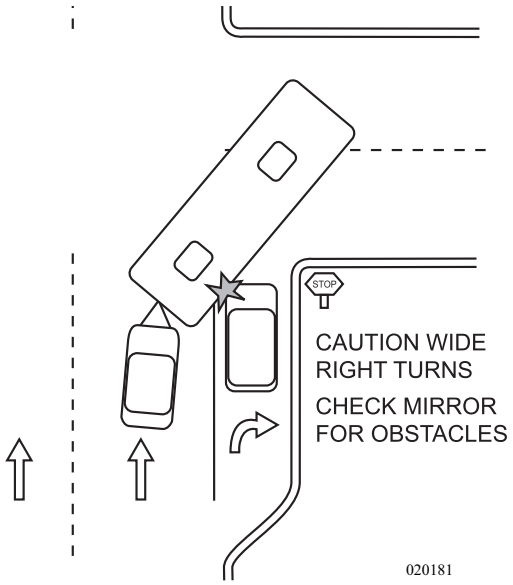


**Ascending a Grade:**

When approaching an uphill grade, try to assess how steep and long it is before beginning to climb. Prepare early for long climbs.

Unlike gasoline engines, diesels do not necessarily produce more power by pressing further on the accelerator! A gasoline engine will happily work at full throttle (at least for a short period of time), but a diesel usually just wastes fuel at full throttle. The power output from a diesel engine is dependent upon the following:

- **RPM -** Every engine has a range of RPM where it produces power most efficiently.

- **Fuel/Air mixture -** At a given RPM, an engine, even with the help of a turbo-charger, can only "pump" a given volume of air into the combustion chamber. This volume of air can combine with only so much fuel efficiently; so it follows logically that feeding more fuel to the fire will simply waste fuel.

Determine the ranges where the motorhome works best by driving long grades in a way that temperatures will remain stable for the duration of the climb.

**IMPORTANT SAFETY TIP: If the road speed degrades to the point where the motorhome is moving significantly below the posted speed, turn on the four way flashers. Take advantage of pullouts if traffic is building. Once in the pullout, if there is sufficient clearance for safety, take a break. Idle the engine to allow the exhaust and the turbo to cool. While these are cooling, the transmission also cools. Monitor the gauges and enjoy the view while you wait.**

downhill.eps

**Descending a Grade:**

When descending a long grade, use the braking force of the engine and the auxiliary braking device (i.e. the Jake Brake or exhaust Pac Brake) to maintain a safe, slow speed. Do not rely entirely on the service brakes to slow the motorhome when descending long grades. “Pumping” or “riding” the service brakes is not recommended when descending a grade. Pumping the brakes can result in a loss of air pressure and riding the brakes can cause them to over heat. Either can result in loss of brake effectiveness or brake failure.

If it is necessary to use the service brakes for additional braking, use moderately heavy pressure on the brake pedal to reduce the motorhome speed to the desired speed of travel, then release it.

Before descending a grade, downshift the transmission to a lower gear and use the engine to slow the vehicle. Monitor the motorhome speed while descending the grade.

If the motorhome begins to accelerate while proceeding down the grade, or it becomes necessary to slow the motorhome, activate the auxiliary braking device. If the motorhome has a Jake Brake, select either "**LOW**" or "**HIGH**" depending on the amount of engine braking desired.

**Night Driving:**

- As always be well rested and alert when driving. If necessary, find a safe stopping place to rest until ready to continue.
- Avoid using any interior lights while driving. They can create a glare on the windshield, decreasing visibility.
- Dim the dash lights to a comfortable level to reduce the level of glare.

**Extreme Heat and Hot Weather Conditions:**

- Observe all gauges frequently. Any variations from the normal conditions should be evaluated promptly.
- Check tire pressure frequently when traveling in hot conditions. Tire air pressure increases with heat. It is not advisable to let air out of a hot tire. When the tires cool down they will return to the correct/previous tire pressure.
- Pay extra attention to hoses and belts which are more susceptible to fatigue in extreme heat.

**Winter and Cold Climate Conditions:**

- The motorhome should be prepared for Cold Weather Use.
- Keep speeds slow and steady. Make moves gradually and increase visual distance for a gain in reaction time.
- If road or weather conditions are treacherous find a safe stopping place and wait for conditions to improve.
- Avoid using an engine retarding device on wet or slippery surfaces, which can cause the drive wheels to skid.
- Wipers should be in good condition and the washer reservoir should have sufficient winshield washer fluid containing antifreeze in it
- Use the mirror heat to keep the mirrors clear.
- Remove any ice build-up from the entry step to avoid accidental slipping.

**Wet Conditions:**

- The risk of hydroplaning is increased if tires are worn or improperly inflated.
- Be aware that heavy rain or deep standing water can affect brake application causing them to apply unevenly or grab.

**Fuel Economy:**

Many factors contribute to the amount of fuel consumed during driving. Driving styles, wind resistance, terrain, vehicle weight, and engine-driven accessories are some of the factors that affect the fuel economy. Use the following guidelines to help increase fuel efficiency:

- When starting out, apply the throttle lightly and accelerate gradually. Avoid using excessive throttle and accelerating quickly.
- Check the tire pressure. A low tire is not only a safety hazard, it also increases rolling resistance which increases fuel consumption.
- While operating the motorhome, keep the engine at a low to mid operating range of 1100 to 1500 RPM. This will use less fuel than operating at higher RPM.
- Avoid using full throttle when ascending a long hill. This wastes fuel and increases engine operating temperature from incomplete combustion. Manually shift to a lower gear and use less throttle. Fuel will burn more efficiently.
- Avoid extended idling to "warm-up" the engine. Start the engine and wait for normal oil pressure to register. Engage the high idle feature until the engine coolant temperature gauge raises. The engine is now ready for travel. Whenever coolant temperature is below 160° F (as in an idling engine) incomplete combustion occurs. This causes carbon buildup and raw fuel will wash the lubricating oil from the cylinder walls diluting the crankcase oil.
- Excessive idling (more than 10 or 15 minutes) can clog fuel injectors and may eventually cause piston rings and valves to stick.
- Operate the transmission with the MODE function set to **Economy** whenever possible; this allows for earlier shifts and enhanced fuel economy.
- Follow the maintenance schedule for the engine, transmission and chassis. Proper maintenance will lead to enhanced fuel economy, motorhome performance, and overall longevity.

**Refueling:**

- Truck stops are good refueling points for motorhomes.
- Know which side the fuel port is on. There may not be adequate space to turn around in the parking lot to reposition for the pump.
- Check overhead clearance heights before pulling through the fuel island.
- Be aware of the concrete/steel posts installed around the fuel island.
- Avoid running over the fuel hose as it can get hung up on the motorhome, causing body damage.
- Use of gloves is recommended for refueling. Store the gloves in the outside compartment.

• To prevent grease and fuel deposits from being tracked into the motorhome when refueling, change shoes before entering the motorhome. Store the extra pair near the entry door.

**WARNING: Avoid the risk of fire or explosion. Turn off all pilot lights and appliances before entering a refueling station.**

## PRE-TRIP PREPARATIONS - CHECKLIST

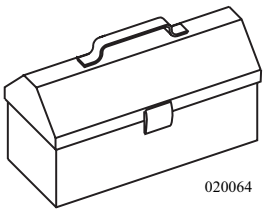

020064

Test Light

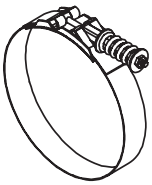

T-Bolt Clamp

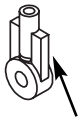

090333b

**Height Control Link**

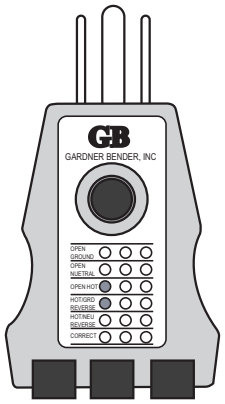


Polarity Tester

020062

The following list highlights items that need to be checked on the motorhome before traveling. Prior to departing several items will need to be prepared. Some suggestions are listed below. Use the lists as general guidelines when preparing to depart. By doing so, there is a better chance of not facing problems during the trip. For chassis maintenance details, please refer to the chassis section.

**Items To Carry:**

- Local, State and National Maps. Truck atlases can be useful for showing maps, refueling stations and truck repair facilities.
- An emergency road kit containing a flashlight, road flares, warning signs and a fire extinguisher.
- Potable/non-potable water hoses and a water pressure regulator.
- Hand tools.
- 12 Volt DC test light and a 110 AC Polarity Tester. These may be helpful when on the phone with a technician.
- A battery hydrometer to check the condition of battery electrolyte.
- A spare 12 Volt DC continuous duty solenoid (if applicable).
- An assortment of spare fuses.
- A link kit for ride height control assembly (air suspension only).
- A spare alternator serpentine belt.
- Charge air cooler T-bolt clamp.

**Interior Items:**

- Start refrigerator operation the night before departure to get a head start on the cooling process. Pre-cool items prior to loading the refrigerator.
- If necessary, load pots, pans, utensils, soap, linens, etc.
- Secure and fasten the bi-fold and pocket doors. Lock the shower door.
- Close roof vents and windows.

**Exterior Items:**

- Check operation of all exterior lights, headlamps, taillights, brake and clearance lights.
- Check the battery fluid level of Liquid Lead Acid batteries.
- Check all fluid levels on the chassis and generator. (See **Chassis Information** section and the generator manual for details.)
- Check the fuel/water separator in the engine compartment. Clean and drain if needed.
- Adjust the mirrors.
- Check the windshield wipers.
- Fill the LP-Gas tank.
- Test the generator.
- Make sure the following items are in the motorhome: sewer connection hose, water fill hose, awning rod and electrical adapters.

**Engine Checklist:**

- **Inspect** the engine, transmission and engine compartment for fluid leaks.
- Inspect the area under the motorhome for fluid leaks or puddles.
- Check all fluid levels, oil, antifreeze, transmission, hydraulic fluid and washer fluid.
- Inspect belts and hoses for wear.
- Inspect wiring for loose, frayed or corroded connections.
- Start engine and listen for any unusual noises.

**Driving Preparations:**

- **Inspect** fluid level (if applicable) in oil bath hubs.
- Fill the water tank and make sure the waste tanks are empty. Test the water pump.
- Disconnect and store the fresh water hose.
- Check all tire pressures.
- Check tires for cuts, punctures, weather damage or cracks in the sidewalls and tread areas.
- Check for foreign objects lodged between dual tires.
- Make sure all lug nuts are tight. This should be done by an approved repair facility.
- If applicable, program the navigation system.
- Secure all awning locks.
- Check items in storage bays to prevent shifting or damage to items.
- Outside compartment doors should be closed and locked.
- Look around, above and under the motorhome for obstructions.
- Check fuel level gauge. Fill the fuel tank if necessary.
- Check all other dash gauges for operation and correct level indications.
- Secure and lock the entry door for travel.

**Storing Cargo:**

The passenger side storage bay doors have been fitted with pantographic hinges. When the latch is opened the storage doors will swing out and up. Caution must be exercised when opening as cargo may shift during traveling. When closing the bay doors, be sure to keep fingers away from the openings.

**WARNING: To avoid injury, never place your hands or fingers near the top of the bay door when opening or closing. Always use the latch handle. Apply pressure with the other hand just above the latch handle.**

It is important to remember that regardless of how large the motorhome is there is a limit to storage capacity. Pack as lightly as possible to allow for additional storage during the trip. It is often easier to purchase needed items at the final destination rather than to discard items to make room for additional cargo.

When packing the motorhome keep two things in mind: turning and braking. For the motorhome to handle well, the load will need to be evenly distributed side-to-side and front-to-back. Additionally, heavy items should be stored as low as possible to keep the motorhome from becoming top heavy. Make sure that everything is secure and safe from quick turns, bumps and sudden stops.

**When loading the motorhome, please follow these guidelines:**

- Distribute the cargo weight evenly from side-to-side and front-to-back. This practice will prevent both handling problems and uneven stress on the components throughout the life of the motorhome.
- Heavy items should be stored near the rear axle, lighter items stored toward the front.
- To maintain a low center of gravity and reduce sway, store light items in the overhead cabinets and heavier items near the floor.
- Secure loose items to prevent weight shifts that could affect the balance of the motorhome.

**Helpful Hint:**

Multi-purpose items, versatile clothing and periodic removal of unused cargo will streamline cargo storage.

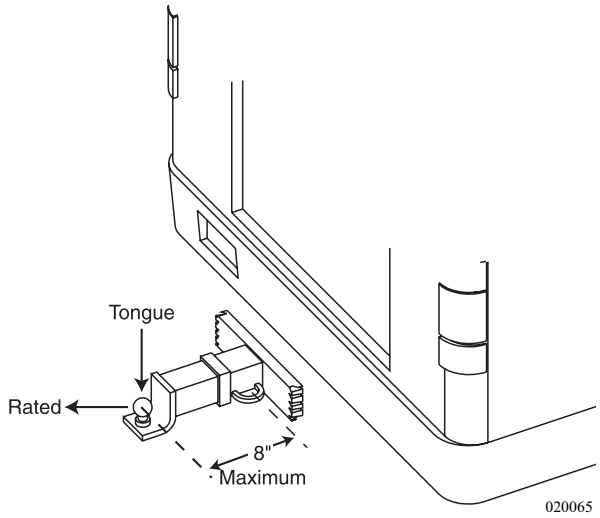


When using the rear hitch receiver, remember that the motorhome is intended for towing light loads and is primarily designed as a recreational vehicle. Safety and durability of the hitch receiver requires that the receiver be used properly. Avoid excessive towing loads or other misuse of the receiver. Towing will affect fuel economy. Weight pushing down on the rear hitch must not exceed 10% of the hitch capacity.

It is recommended to weigh the motorhome when fully loaded to ensure proper weight distribution of the GCVW (Gross Combined Vehicle Weight). When weighing the motorhome add all passenger weight to the GCVW total. The motorhome fully loaded, including fresh water and LP-Gas and any vehicle or trailer towed by it, must not exceed the GCWR (Gross Combined Weight Rating).

**WARNING: Most states and Canadian provinces require any trailer or vehicle being towed have adequate auxiliary brakes. Failure to comply with these State and Canadian province requirements may result in fines and/or pose a safety hazard, which may result in an accident.**

**WARNING: Do not tow a trailer or vehicle that exceeds the rated capacity of the hitch receiver. Overloading the hitch receiver can cause unusual handling characteristics and overstress the hitch receiver and chassis. It could also void the warranty. If there are any questions, call a factory technician.**

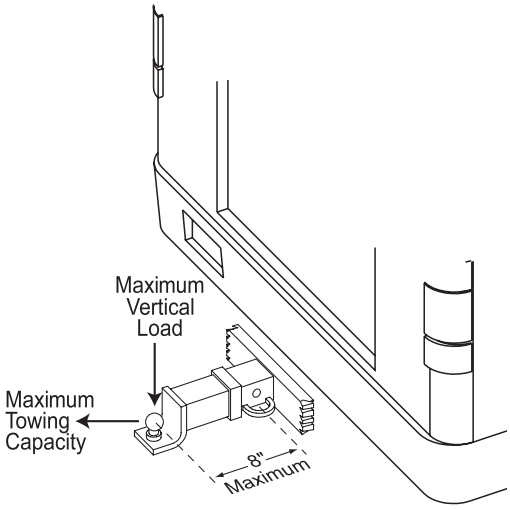


MONACO COACH CORPORATION
Coburg, Oregon
Springfield, Oregon
Wakarusa, Indiana
Elkhart, Indiana
Nappanee, Indiana

Any Towed Vehicle or Trailer Over 1000 lbs (454 kg) Should Have Separate Functioning Brake System.
Refer To Owner's Manual For Additional Towing Guidelines
03213020

MONACO COACH CORPORATION
Coburg, Oregon
Springfield, Oregon
Wakarusa, Indiana
Elkhart, Indiana
Nappanee, Indiana

Do Not Cut, Weld or Modify
03213019
Do Not Exceed Vehicle Ratings
Maximum Towing Capacity 10,000 Lbs. (4,536 Kg.)
Maximum Vertical Load 1,000 Lbs. (454 Kg.)
Any Towed Vehicle or Trailer Over 1000 lbs (454 kg) Should Have Separate Functioning Brake System.
0100200
Refer To Owner's Manual For Additional Towing Guidelines

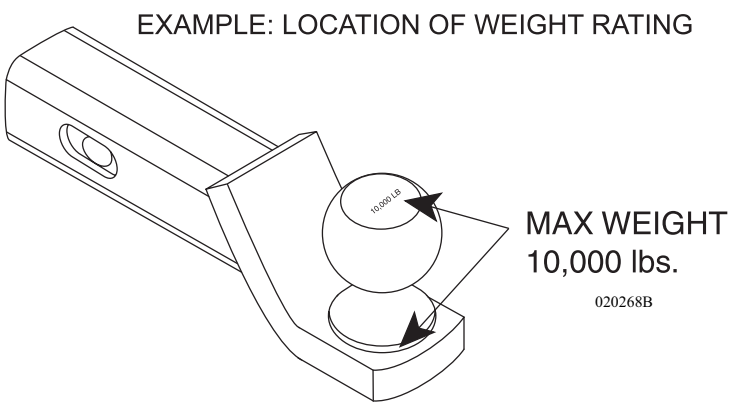


**Tow Car or Trailer:**

1. Connect a tow car or trailer to the motorhome with safety chains rated for the weight of load.
2. Make the electrical connection and perform a light check before starting a trip and at each rest stop.
3. Check the tires frequently. Flat tires on a towed vehicle cannot be detected from the motorhome while driving. A flat tire is a safety hazard and may cause extensive damage.

**WARNING: Be sure the weight ratings of the ball mount, tow ball and safety chains are equal to or greater than the load. The use of an extension to the receiver or extended ball mount will significantly reduce hitch receiver weight ratings. Modifications to the hitch receiver or use of the hitch receiver other than intended can void the warranty of the hitch receiver, chassis or both.**

## *Tow Plug Connection*

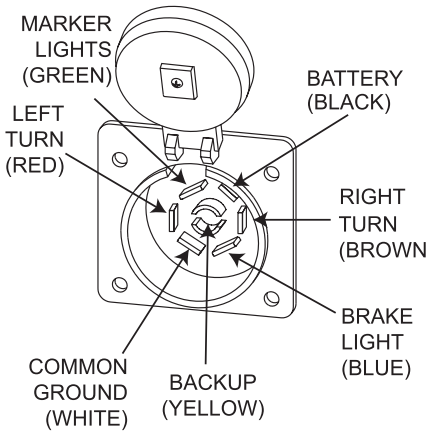


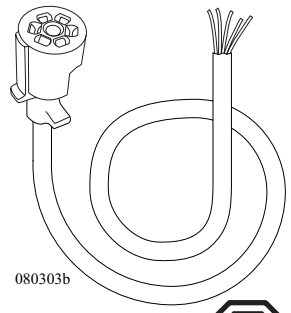


The motorhome is pre-wired from the factory with an electrical connection for towing. The connection is located on or near the hitch receiver. Convoluted tubing protects the tow harness wires. Current draw should not exceed ten amps for each designated light circuit. Within the electrical connection is a positive terminal for use when towing a trailer equipped with a battery. The positive terminal maintains the charge of the trailer battery.

**The tow harness wires are color-coded:**

- Yellow, 14 gauge - Back Up
- White, 10 gauge - Ground
- Brown, 14 gauge - Right Turn Signal
- Red, 14 gauge - Left Turn Signal
- Blue, 14 gauge - Brake Light
- Green, 14 gauge - Marker Lights
- Black, 10 gauge - Battery 30 Amp Circuit Breaker

When preparing a tow plug connection strip the wires 3/8". Twist the wire strands and place under the clip and secure the screw. Make sure there are no loose strands of wire that could short against the case or other terminals. Do not accidentally mirror image the trailer connection.

**CAUTION: The positive terminal connection of the tow plug remains live at all times. When towing a trailer equipped with a battery be sure to unplug the electrical tow connection when parked. Failure to unplug the tow connection may result in discharged chassis batteries.**

## REAR VIEW SYSTEM

This system uses a 7" LCD screen that displays the rear vision and radio systems. The rear view vision feature provides the driver with a view of the rear of the motorhome. The monitor offers four different perspective views: **Full**, **Zoom**, **Just** and **Normal**.

**NOTE: The radio system operates with the radio remote control or from the radio push buttons.**

**Power Requirements:**

- Main battery disconnect switch (located in the battery compartment) must be on.
- Turn on the interior house power using the battery cut-off switch.

**To View:**

- Press the **Open** button. The monitor will automatically slide out and stop in a vertical position.
- Press the **blue power** button to turn on the monitor. Adjust vertical axis of monitor for optimum view. The monitor automatically switches to a rear vision system by placing the transmission in reverse. The monitor may be turned on manually by pressing the **Mode** button. Use the **left** or **right** button until the hand points to **Camera**. Press **Enter** to select.
- Press the **Aspect** button to toggle between **Full**, **Zoom**, **Just** and **Normal** views.

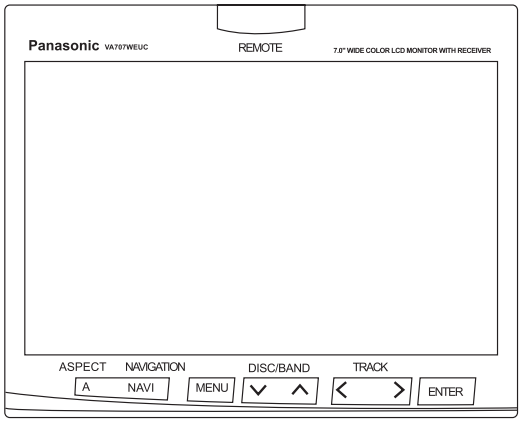


020238

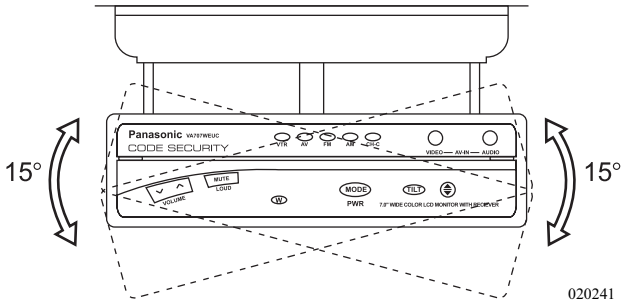


020241

(Top View)

Must Be At 0° To Close

**NOTE: Reset monitor angle position before stowing.**

**INFORMATION: For instructions that are more detailed refer to the Panasonic Monitor's operations manual.**

## *See Vision (Optional)*

The optional See Vision system includes three additional cameras. A camera is mounted on each of the rear view mirrors and one camera is also mounted on the front overhead to provide a view of the interior.

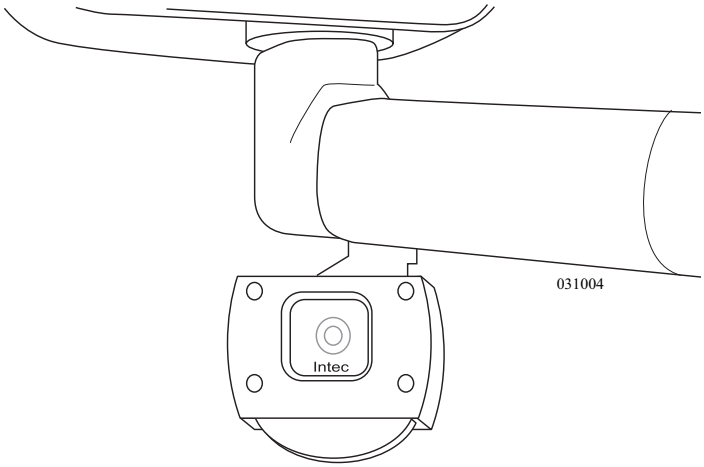


**To obtain different camera views:**

- Turn on the interior house power using the battery cut-off switch.
- Turn on the Aladdin Reset/Storage switch. Move the Aladdin joystick in any direction to "waken" the system.
- From the Main Menu, use the Aladdin joy stick to move the cursor to Select Camera.
- Move the joystick Right to enter Select Camera. Move the joystick up or down to select the desired view.
- Activating the turn signal will select that camera, either right or left. When the turn signal lever is placed to the neutral position, the system will return to the previously selected camera.

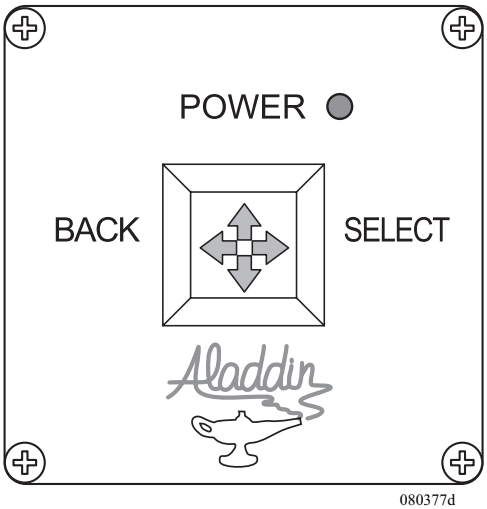


**NOTE: When the motorhome is placed in reverse, the rear camera will automatically display. As an aid in guidance when backing, select either right or left turn signal to display the desired camera for a more complete view. Cancel the turn signal to return to rear view.**

Whether you are a long time owner of recreational vehicles or just starting out, backing up can be a challenge. Following some simple guidelines may help reduce the challenge. When backing up, the driver (pilot) should be comfortable using the mirrors, the back-up camera and the co-pilot's directions (ground guide) for assistance. Practice first, backing up with the co-pilot's guidance in a large unobstructed parking lot. Backing up is a team effort.

The backing up process should begin while the motorhome is in forward motion. Maneuver the motorhome to align with the chosen site. This allows straight alignment with the site. Aligning the motorhome with the site after the backing process begins will require considerably more room than an automobile, and may require more than one attempt. When the motorhome is properly aligned with the site, the parking area will be visible in both mirrors. Use straight lines, such as road markings, as reference points when possible.

If the destination does not have "pull-through" sites, try to pick a solid, level site. If possible, pick a site located on the left side. This is the preferred side. The driver will have a better field of vision by using the roadside mirror. If the site is on the right side, the driver will have to use the curbside mirror for backing up, which leaves a blind spot. When a potential site is spotted, stop the motorhome before the site. Get out and observe the area for soft ground, posts, large rocks, low hanging limbs or other obstacles. If the site meets the particular criteria, prepare to back in carefully. Have the co-pilot provide guidance using the five hand signals.

The co-pilot will perform just as important a job as the driver. When guiding the driver, the co-pilot should be located safely at the left rear corner of the motorhome, facing forward, while remaining visible in the roadside mirror at all times. The co-pilot should make a conscious effort to maintain sight of the driver through the roadside mirror as the front of the motorhome maneuvers.

If the driver loses sight of the co-pilot, stop the backing up process until the co-pilot returns to view. To avoid mishaps, the co-pilot should be focused only on what the driver is doing, with brief observation moments. The driver should receive directions only from the co-pilot. If necessary, stop the backing up process to have co-pilot inspect other areas or angles of concern. Use of walkie-talkies will aid in guidance.

When the co-pilot is guiding the driver, only five clearly defined signals should be used, with only one signal given at a time. Flailing arms with indecisive signals only confuse the driver. Signals should be given with purpose and confidence. Directional signals are directing travel of the rear of the motorhome.

If the desired direction is left, the co-pilot points left. For example: The co-pilot will use his/her right arm and forefinger pointing distinctly left with arm and finger held on a horizontal plane, indicating desired direction of travel of the rear of the motorhome. This type of directional signal is easily discerned in the mirror by the driver. The directional signal given will remain steady until desired movement is completed.

**The five directional signals are as follows:**

1. Co-pilot uses left hand and arm held horizontal, with forefinger pointing right, to direct rear of motorhome to the right.
2. Co-pilot uses right hand and arm held horizontal, with forefinger pointing left, to direct rear of motorhome to the left.
3. Co-pilot uses both arms and hands parallel with thumbs pointing up and to rear in a waving vertical motion. This signals driver to maintain a straight back direction.
4. Co-pilot holds arms horizontally, hands open with palms facing one another. Start with a wide separation, gradually closing distance of hands, in a rate appropriate to vehicle speed, to indicate amount of distance to the stop point.
5. Closed fists indicates STOP.

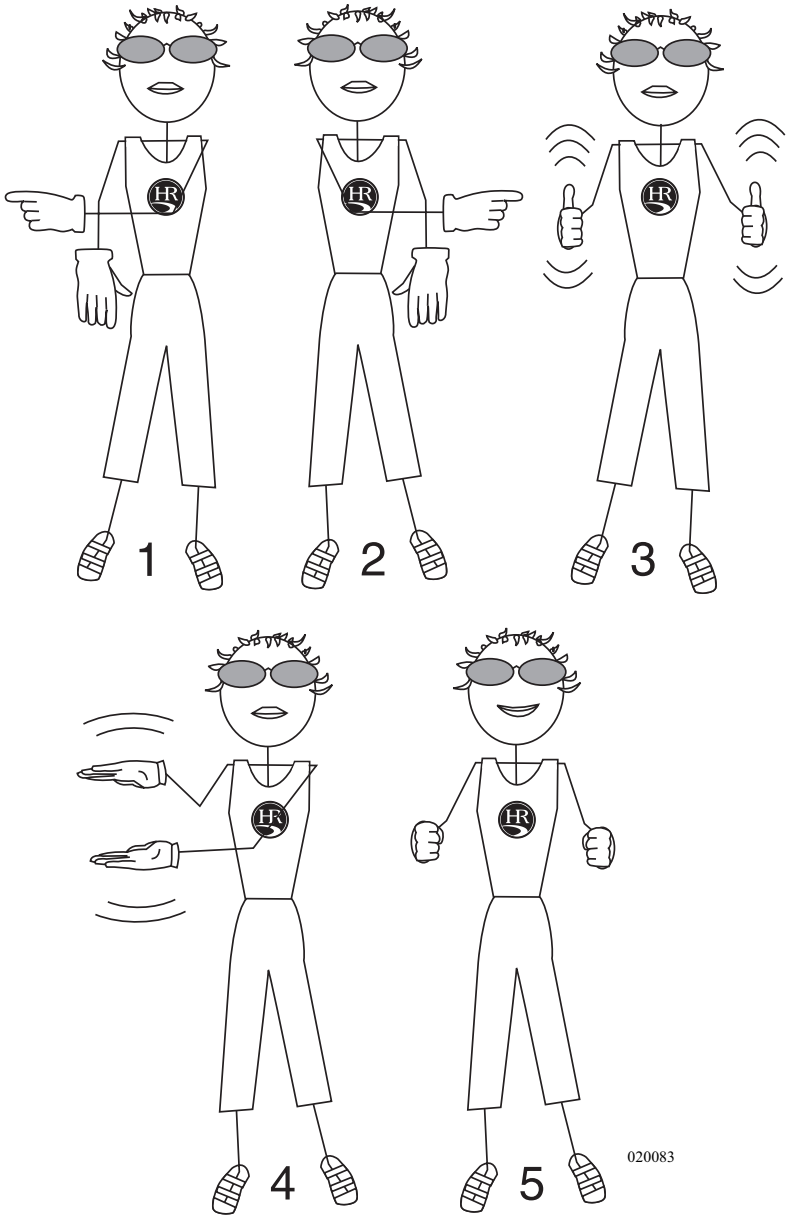

**Backing Up Trailers:**

Trailers have only one pivot point. Trailers may be backed up. Towed vehicles using a tow bar or tow dolly have more than one pivoting point which makes this type of equipment not suitable for backing. If using this type of towing equipment, plan ahead. Park safely along the road and walk a distance, if necessary, to avoid a possible back up situation. Avoid putting the motorhome and tow vehicle in a backing situation. To back up this combination, completely disconnect the tow vehicle from motorhome. Trying to back up the motorhome with a tow vehicle connected will result in damage to the motorhome, tow vehicle and towing device.

The same rules for backing a motorhome may be applied when backing a trailer. When preparing to back a trailer into a space, maneuver the motorhome sweeping wide, then turn back to the opposite direction. This sets the motorhome and trailer in a position to maneuver the trailer into the space. When backing up a trailer, the driver may become disoriented with the direction of the steering wheel in relation to the direction of the trailer. The bottom of the steering wheel must be moved in the desired direction of the trailer. For example: If the desired direction of the trailer is left, rotate the bottom of the steering wheel left. If the trailer moves in an undesired direction, use a short "pull-up" method, pulling forward just far enough to align the trailer with the space. The co-pilot should stand safely at the left rear corner of the trailer within view of the driver in the roadside mirror, using the five hand signals for guiding.

**CAUTION: Tow bars or car dollies generally are made to travel in a forward direction only. Most towing equipment of this type is not designed for backing. Never attempt short back up distances with a tow bar or tow dolly. Damage to the motorhome, vehicle or towing device will result.**

## SET-UP PROCEDURES - CHECKLIST

If the site for the motorhome has full hook-ups, use this quick reference hook-up checklist. This hook-up list is only a guide. This checklist has information on hooking up the utilities and preparing the appliances for use. Specific information on the slide room, awning and leveling system operations is discussed in detail in other sections.

- If applicable, unlock any travel locks which may be securing the slide room. Check for lateral clearance before extending the slide-out room.

**NOTE: To operate any slide room the ignition must be OFF, the park brake must be set and the bay doors must be closed.**

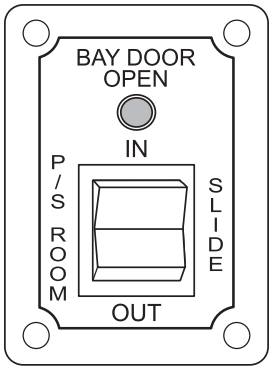


060133B

- Follow the procedures and guidelines for “Leveling the Motorhome.” If the motorhome is equipped with hydraulic jacks, be certain the parking surface will accommodate the weight placed on the jacks.

**CAUTION: Before leveling the motorhome survey the area around and under the motorhome for obstructions which can damage the motorhome or undercarriage components when the air bags are deflated.**

**CAUTION: Hot asphalt may not support the weight that is placed on the hydraulic jack pads. Place thick plywood under the jack pads to help disperse the weight. Never use the leveling system to support the entire weight of the motorhome. Damage from excessive torsional twists can result.**

- Open the LP-Gas tank primary valve.
- If possible, begin appliance operation on LP-Gas for the first 60 minutes. Switch the refrigerator operation to gas, start the water heater and furnace (if needed). This will allow time for the inverter to stabilize the battery charging.
- Prepare the shore cord to be plugged in. Uncoil and inspect the cord. Perform any necessary cord maintenance. Install proper electrical adapters if anything other than 50 Amp service is provided. Operate electrical appliances in sequence when hooked to a limited shore power service. Turn shore power circuit breaker OFF prior to plugging in the shore cord.

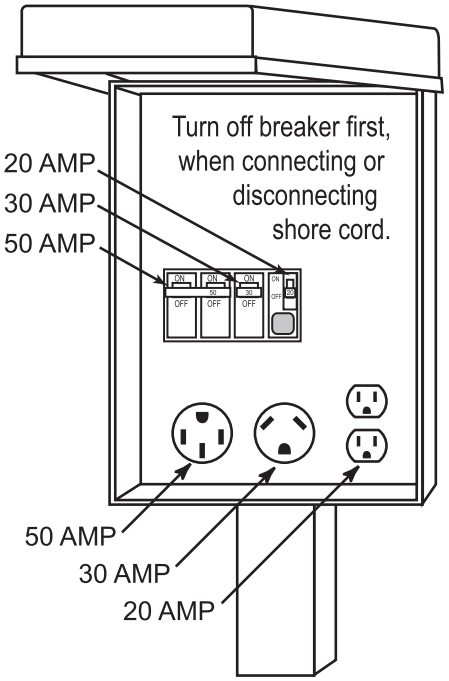


**CAUTION: If shore power service is limited to 15 or 20 Amps, use of light duty extension cords and electrical adapters will create a voltage loss through the cord and at each electrical connection. Line voltage loss and the resistance at each electrical connection can be a hazardous combination. Damage to sensitive electronic equipment may result!**

- If cable service is provided, hook-up a 75 Ohm RG59 or RG6 cable to the cable connection in the service center.
- A phone connection port is provided in the service center. Phone utility outlets are placed throughout the motorhome, including a phone line attached to the satellite receiver for Pay-Per-View movies and events.

- Hook a potable water hose to the city water connection in the service center. A water pressure regulator is built in. Turn the hand valve so the pointer indicates “city water.”

**NOTE: A water pressure regulator attached between the city water faucet and the potable fresh water hose will protect the hose from swelling or bursting under high city water pressure. Securing the pressure regulator to the hose with pliers will prevent the regulator from being misplaced.**

- Hook-up the sewer hose. Sewer drain pipe diameters are generally either three or four inches. Proper sewer hose adapters will ensure against leaks or spillage. With the sewer hose properly connected open the grey water valve (small valve). The black water valve (large valve) remains closed until the tank is full or until time of departure.

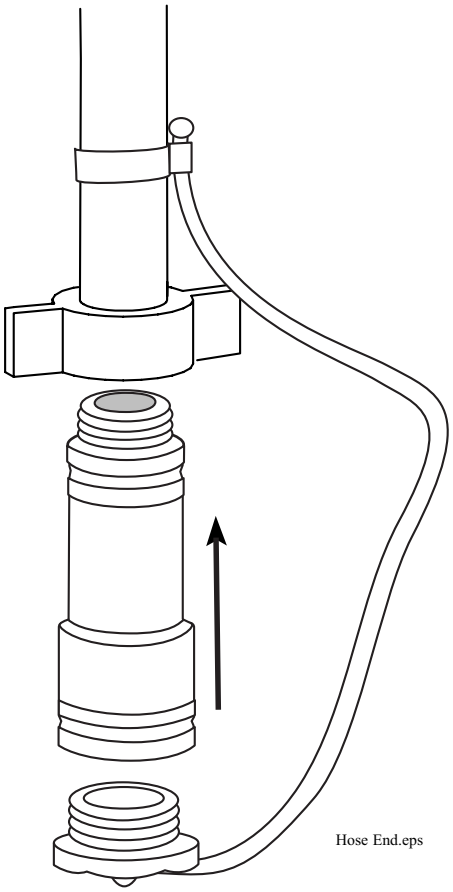




## DRY CAMPING

The key to a successful dry camping trip is having a reasonable understanding how the different electrical systems work and interface. Each electrical system operates as a single entity but is usually connected or dependent upon operation of another electrical system. If one electrical system malfunctions, it generally effects the operation of another electrical system. To obtain satisfactory performance, all electrical systems must be in proper working order and operated in the parameters for which they are intended.

When it comes to dry camping, the state of the charge of the house batteries is going to determine how long the interior lighting will last or how long the TV operates from the inverter. Starting a dry camping trip with batteries in a low state of charge, or one battery in the battery bank that is damaged, will ultimately result in a disappointing time. There are several different charging systems, all of which are designed to either charge or offset battery draw. There are three basic charging systems on the motorhome: inverter/converter, alternator and solar panels.

Each charging system performs a specific type of charge profile. The inverter/converter is the preferred method to charge the house batteries. The inverter/converter uses 120 Volts AC supplied by either shore power or the generator. It converts 120 Volts AC to 13.5 to 14.5 Volts DC, depending on state of charge of the batteries and the load placed on them. The alternator maintains battery voltage while traveling and supplies the current necessary to operate various loads placed on the engine and house batteries. Solar panels offset various parasitic loads that are on the house batteries.

Begin with a full fresh water tank and empty waste holding tanks. When the fresh tank is low, the waste holding tanks will more than likely be full. Empty the waste holding tanks before refilling the fresh water tank. Learning ways to save water will ease the burden of camping without hookups. Bottled water is a good alternative for you and your pets to eliminate demands put on the fresh and grey water tanks. By placing a small plastic tub in the sink, grey water can be collected and recycled for use in the toilet. Instead of rinsing dishes under a running faucet, use two plastic sink tubs - one for washing and one for rinsing. When possible, take advantage of campground facilities offering restroom, shower and laundry service.

While showering, turn the water off while soaping and shampooing your hair. Alternate a shower and a sponge bath every other day. A plastic tub from the kitchen sink works well for sponge baths and allows you to save that grey water resource. When brushing teeth, rinse the brush in a cup of water, and gargle with bottled water. A battery charged razor would cut down on water usage while shaving.

Before arriving at your destination, fill up with fuel for the generator. Carefully monitor for voltage draw while dry camping. Plan ahead and conserve resources while dry camping. Dry camping requires fully charged and properly maintained batteries (corrosion cleaned, terminals tightened, cables checked, etc.).

Solar panels are a valuable addition to help charge the batteries Adding a second panel (and adding a third if possible) will charge the batteries during daylight hours. Clean the solar panels regularly for optimum performance. Dust, dirt, grime and pollution from the road and air will decrease their efficiency. Clean the solar panels with window cleaner and a soft cloth.

Most dry camping locations can accommodate motorhomes of various lengths. Confirm that the facility you plan on visiting can accommodate your motorhome's length and size. Arrive during daylight hours to properly set-up the motorhome and prepare for the night ahead. Getting to a site on narrow and winding campground roads takes skill and patience. Avoid low hanging limbs, tree trunks and barriers lining the roadway. The co-pilot or the campground host should provide assistance when maneuvering the motorhome around curves and bends.

**Setting Up for Dry Camping:**

- Switch refrigerator operation from Auto to LP-Gas.
- Operate the water heater on LP-Gas (diesel, if equipped with an Aqua-Hot). Turn it on about an hour before hot water is needed.
- If the furnace (or optional Aqua-Hot) is needed during the nighttime, set the thermostat temperature a bit lower to prevent the furnace from cycling all through the night.
- Check on small items that use battery power, such as the porch light, bay lights, the light under the step, generator compartment lights, engine compartment lights, etc. If the television is not being used, turn off the 12 Volt booster. Even one light accidentally left on, such as under the front cap, reduces battery reserves quickly.
- Some battery draw is unavoidable. The battery cut-off switch at the entry door must be on to operate many interior items such as lights or the furnace.
- Keep flashlights handy. Build a campfire when spending nighttime hours outdoors. Extinguish the flames before retiring for the evening. Many campgrounds place wood or cement barriers between the site space and fire pit. Illuminate any barriers or obstacles in the pathway to the motorhome.
- Place a large flashlight inside the front door for navigating through the motorhome during the night without having to use interior lights. If interior lighting is needed, use one light in a central location, such as the vanity.
- During the day it is still important to conserve on energy. Turn on the water pump only when using water. Turn the pump off when not in use. The water pump does not draw an abundance of power, however all battery amp hours are important and should be conserved.
- If it is too early in the morning or too late in the day to run the generator, use the inverter for AC power. Remember to turn off the inverter when not in use. When the rest of the campers are up and about, turn on the generator and run it for a couple of hours to help charge the batteries. The generator may seem loud, however, the noise is minimal just a short distance away from the coach. Run the generator during clean up and preparation for the day.

- Check the Aladdin System frequently and keep track of water usage and battery consumption. Routinely check the LP-Gas level. Remember the furnace uses more gas in cold weather.
- Careful management of water is critical when dry camping. Know the motorhome tank capacities. Picture the amount of liquid in a gallon container. Visualize that amount each time you run the water. If you are dry camping for an extended period, limit shower usage. Turn the water off when soaping down in the shower. If water conservation is critical, take a sponge bath. Conserve water while brushing your teeth. Chances are a campground without hookups will not have large comfortable shower rooms or bathrooms. It may only be equipped with primitive facilities, however, if it helps to economize on water, use them.
- Do not fill the sink full of water to wash a few dishes. Use disposable dishes whenever possible. Conserve propane by cooking dinner over the campfire. However, if cooking over the campfire is not desired, use the cook top or microwave. If you use the inverter to operate the microwave, battery power will be consumed quickly. If possible, use the generator to operate the microwave. It is healthy for the generator to operate under a heavy load such as the microwave.
- Allow the generator to power up for a couple of minutes before applying a load.
- To conserve on battery power, plan what is needed from the refrigerator prior to opening it. If weather does not permit eating at the picnic table, or if no picnic table is available, eat at the dinette table by candlelight.
- Leave shoes outdoors or at the entry step to avoid tracking in dirt. Open windows during the day instead of using the roof air conditioner.
- Get back to nature and still enjoy the comforts of the motorhome. With a little imagination, the ways to conserve available resources while dry camping are endless.

**Typical Current Draw:**

- Interior Coach Power requires using a continuous duty solenoid that has a .7 Amp draw.
- A 13" TV has a 1.7 Amp draw.
- Rope lights (10 ft) are a 1.3 Amp draw.
- The porch light is a 2.0 Amp draw.
- One fluorescent dual bulb light has a 2.1 Amps draw.
- One halogen ceiling light has a .09 Amp.



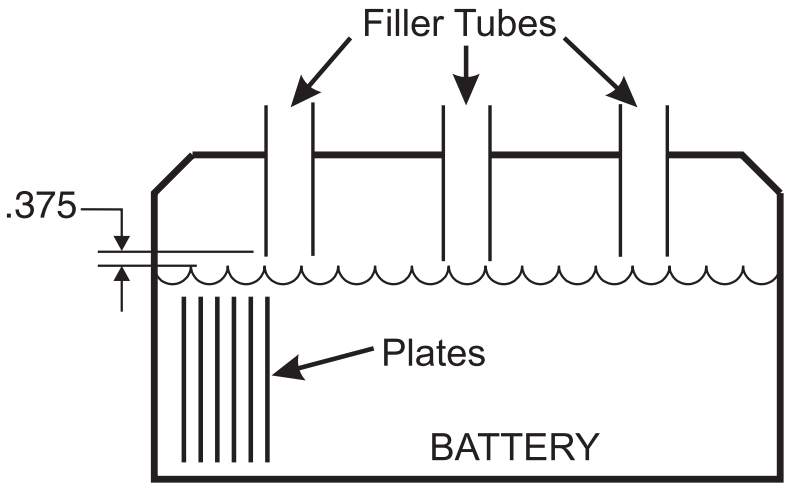


The distilled water level in the battery should be 3/8" below the Filler tube.

020034

| Battery State of Charge vs Voltage/Specific Gravity | | | |
|---|---|---|---|
| VOLTAGE | SPECIFIC GRAVITY | STATE OF CHARGE | DEPTH OF DISCHARGE |
| 12.66 | 1.265 | 100% | 0% |
| 12.45 | 1.225 | 75% | 25% |
| 12.25 | 1.190 | 50% | 50% |
| 12.05 | 1.145 | 25% | 75% |
| 11.90 | 1.100 | 0% | 100% |

*Battery Voltage: Fully charged with battery at rest for one hour.*

Battery Charge Voltage chart

## BREAKING CAMP

Below is a checklist guide to reference when preparing to break camp. Preparing the motorhome for travel will require several small tasks. Properly securing and storing items will help prevent them from getting lost or being damaged during travel.

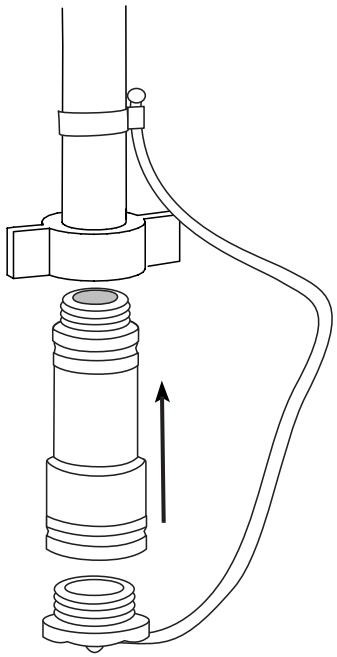

hose end.eps

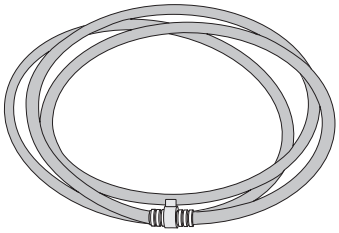

*Screw the ends of the hose together before storage to prevent leakage and to prevent dust and insects from entering hose.*

**Outside Checklist:**

- Disconnect the cable TV, lower the television antenna and (if applicable) the satellite dish.
- Disconnect and stow the phone line.
- Retract the awnings and secure them for travel.
- Close LP-Gas tank valve. Check the level of the LP-Gas tank to ensure a sufficient amount is available.
- Connect the sewer hose.
- Drain and flush the holding tanks. First close the grey water valve, run enough cold water down the sink and shower drains until the grey tank is at least 50% full. Be careful not to overfill or flood the grey tank. Next, open the black tank valve allowing the drain cycle to complete. If applicable, connect a non-potable water hose to the No-Fuss hose bib and flush the black tank system. Close the black tank valve, open the grey water valve. The water from the grey tank will help flush the solids from the drain hose.
- Disconnect the sewer hose, flush hose with clean water from non-potable hose, store the hose. Install the sewer cap.
- Fill the fresh water tank (using the potable hose). Disconnect and store the fresh water hose. Remove any hose protected water pressure regulator from the city water faucet.
- Turn shore power breaker off and disconnect the shore line. Wind up and store the shore cord.
- Inspect fluid level in oil bath hubs (if applicable) and check all tire pressures.
- Secure all compartment doors and entry door.
- Inspect tires and wheels.
- Check for fluid leaks under or around the motorhome.

**Engine Checklist:**

- **Inspect** the engine, transmission and the engine compartment for fluid leaks.
- **Inspect** the area under the motorhome for fluid leaks or puddles.
- Check all fluid levels: oil, antifreeze, transmission, hydraulic fluid and washer fluid.
- **Inspect** belts and hoses for wear.
- **Inspect** wiring for loose, frayed or corroded connections.
- Start engine and listen for any unusual noises.
- **Inspect** gauges and controls for proper operation.

**Interior Checklist:**

- If applicable, clear the slide room path, clean the floor, move the driver seat forward and make sure the bay doors are shut. Retract the slide room. When the slide room is fully retracted secure any slide room locks.

**NOTE: To operate any slide the ignition must be OFF, the park brake must be set and the bay doors must be closed.**

- Secure and fasten the bi-fold and pocket doors. Lock the shower door.
- Close roof vents and windows.
- Secure any loose, heavy or sharp objects in case of a sudden stop.
- Close all cabinet doors and drawers.
- Turn off interior lights.
- Turn off water heater, water pump and furnace.
- Walk through the interior and check for any unsecured items.
- Turn the interior lighting off.
- Check the fuel level gauge. Check all other dash gauges for operation and correct level indications.

**Departure Checklist:**

- Check items in storage bays to make sure shifting or damage of items will not occur.
- Look around, above and under the motorhome for obstructions.
  Check for debris stuck between the rear dual tires.
- Walk around the motorhome and camp area checking for forgotten items.
- Outside compartment doors should be closed and locked.
- Check operation of all exterior lights, headlamp, taillamp, brake and clearance lights.
- Secure and lock the entry door for travel.
- When using the hydraulic jacks ensure the jack pad is clear of debris when retracted. Loose rocks, gravel and debris can be thrown from the jack pad and can possibly damage the tow car.
- Secure all awning travel locks.
- Carefully pull forward out of the campsite.
  If necessary, clean the site and check for any forgotten items.

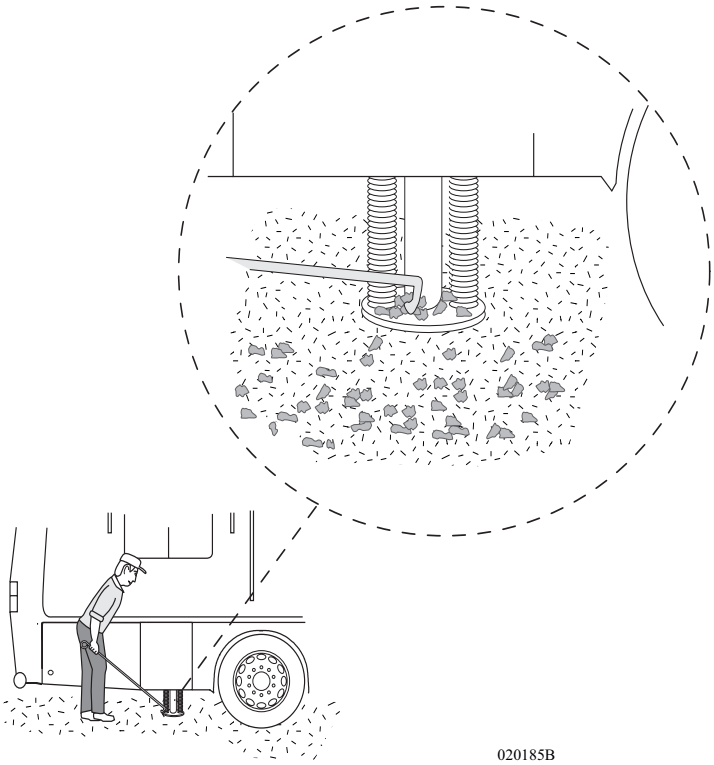

## EMERGENCY PROCEDURES - ROADSIDE

If an emergency situation occurs, use the appropriate braking technique and pull off the roadway a safe distance from traffic (if possible). Set the parking brake and turn on the hazard warning flashers, especially when parked alongside traffic lanes. In the event of an emergency stop due to a mechanical breakdown or other motorhome related problems, contact the manufacturer's **Customer Support** at **(1-877-466-6226)** or an emergency service provider.

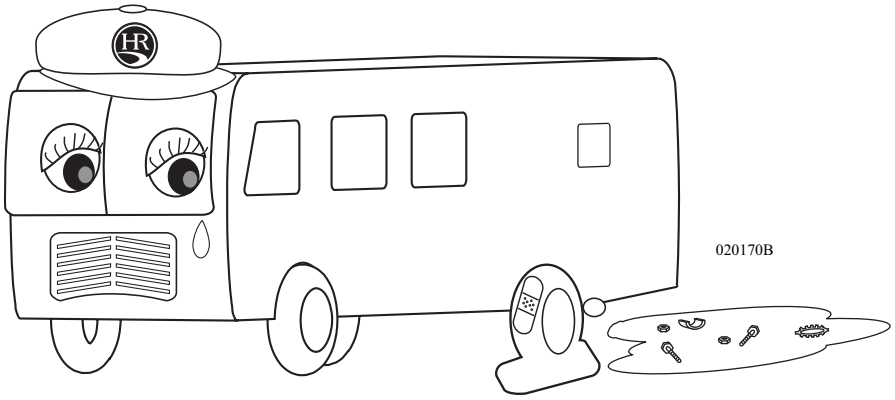


An emergency road kit should include at least three reflective warning signs, road flares, a flashlight, spare automotive fuses and an assortment of hand tools. For added safety a separate fire extinguisher should be considered. The motorhome is equipped with a fire extinguisher located inside next to the co-pilot seat. Road flares or reflective warning signs should be displayed if the motorhome is alongside of the road for any length of time.

Guidelines for placing the warning triangles depend upon the road characteristics and visibility. For example: The standard placement is 10 feet, 100 feet and 200 feet from the rear of the motorhome when on a divided highway or one-way road. On a two-way road, with traffic traveling both directions, the same placement would also be required at the front of the motorhome. Roads with curves and hills may require the placement of the last/furthest triangle to be 500 feet behind the motorhome in order to safely warn approaching traffic.

### *In Case of Flat Tire*

In the event of a flat tire, it is recommended to call for roadside assistance. The size and weight of the motorhome and its tires require the proper equipment to change the tire. A professional service technician will have the equipment and training needed to repair or replace the tire. In the case of sudden tire failure, avoid heavy braking. Hold the steering wheel firmly and gradually decrease speed. Slowly move to a safe off-road place, which should be a firm level spot. Turn the ignition off and turn the hazard flasher system ON. Save the old tire for any warranty coverage.

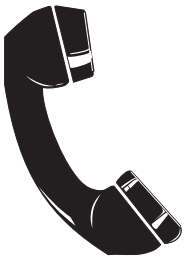

**INFO: *Goodyear* emergency service number is 877-484-7376.**

070175

## OnStar® System (Optional)

OnStar® combines existing technology with a sophisticated Global Positioning System (GPS) to track motorhome location. OnStar services provide aid while traveling: from helping to find a destination to providing roadside assistance. In an emergency situation, OnStar will also utilize the vast resources of state and local emergency, fire and police departments.

In the event of a vehicle breakdown the customer contacts an advisor at the OnStar center. Calls concerning the interior operations, that do not impede travel, should be made directly to the Monaco Coach Corporation Customer Service Department.

Prior to any contact with OnStar the motorhome will need to be registered with Monaco Coach Corporation. A service contract will be required in order to activate OnStar. Service can be started by either pushing the **blue** OnStar button or by calling **800-ONSTAR7**.

The components associated with the OnStar system are: microphone, three-button interface with volume control and a jack for use of headset hands-free communication.

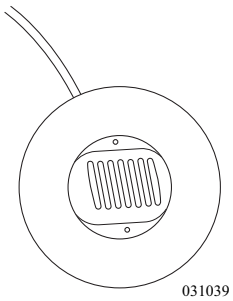

*Microphone*

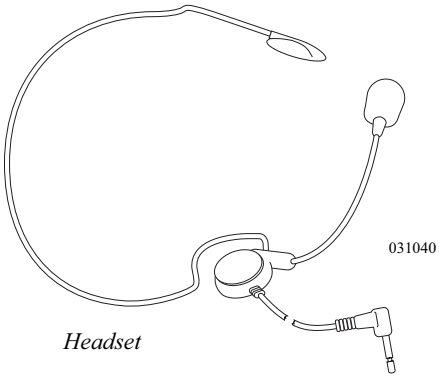

*Headset*

**Operation:**

OnStar operates using the vehicle's electrical system powered by the house batteries. If the house battery cut-off switch is turned off, or the batteries are dead, damaged, or disconnected, the OnStar system will not function.

**Three Button Keypad:**

- The blue **On*** button connects directly to the OnStar center.
- The primary function of the **red** emergency button is to send medical help. This button alerts OnStar of a medical emergency and places that call as priority. OnStar will ask the nature of the emergency. If there is no response, OnStar will GPS the location and immediately send medical help. **OnStar will not determine if medical help is necessary regardless of customer description of symptoms.**
- The **white** button answers and ends calls from OnStar connections, personal calling and virtual advisor.

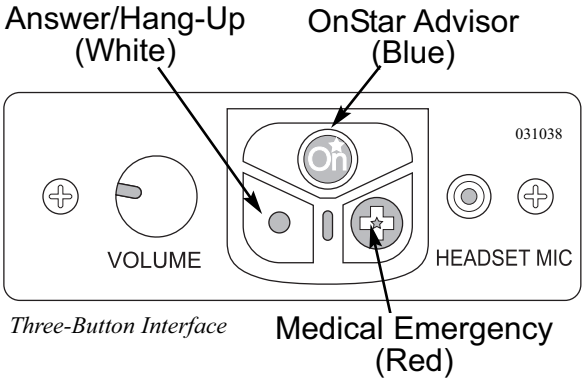

*Three-Button Interface*

## Light - Retractable

The retractable light is located in places of limited lighting for emergency purposes. Normally one will be in the outside access of the rear engine compartment and the roadside electrical compartment.

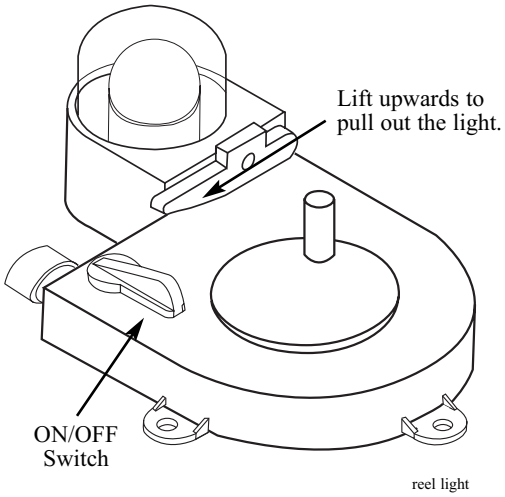


**To Use the Retractable Light:**

1. The bay light switches (located just inside the entry door) will need to be turned on. Activate light by moving **ON/OFF** switch to the ON position.
2. The light is on an 18' retractable reel cord. To operate, lift the lever and pull the light out.
3. The light has a magnetic base attached. Locate a place to attach the light so you can work hands free.
4. To replace bulb push down on clear plastic cover and twist.
5. To rewind, crank the handle in the retract direction. When it is fully retracted, push down on the lever handle to keep the light locked into place.

## Low Fuel - Priming the Fuel System

**Running Out of Fuel:**

When the motorhome runs out of fuel, air enters the fuel lines and fuel system components on the engine. Diesel engines are sensitive to air in the fuel system. If the engine has stalled due to low fuel, it will be necessary to prime the fuel system before the engine will start. Several gallons of fuel will be needed in the tank before attempting to prime the fuel system.

**CAUTION: The engine will sputter for a short period before it stops running due to a low fuel condition. Pull off the road on a firm level surface a safe distance away from traffic. Steering may become stiff if the engine stops running.**

**To Prime the Fuel System:**

1. Add 30 gallons of fuel to the tank, possibly more if the motorhome is parked on an angle.
2. Follow the instructions "To Prime the Fuel System" located in the *Fuel System/Fuel Filters* of *Section 10*.

**Alternative Starting Procedure:**

A weak or discharged battery will not supply the amount of CCA (Cold Cranking Amps) necessary to initiate and maintain cranking the engine while supplying the required voltage to start the engine. If the engine fails to crank, or cranks slowly due to a weak chassis battery, there are electrical back-up systems in place that will increase chassis battery voltage.

**Battery Boost Switch:**

The Battery Boost switch engages a heavy-duty solenoid to electrically connect the house batteries to the engine battery in the event the engine won't crank or cranks slowly. The solenoid is designed for short-term high current intermittent use. Engaging the boost solenoid for an extended period will damage the solenoid.

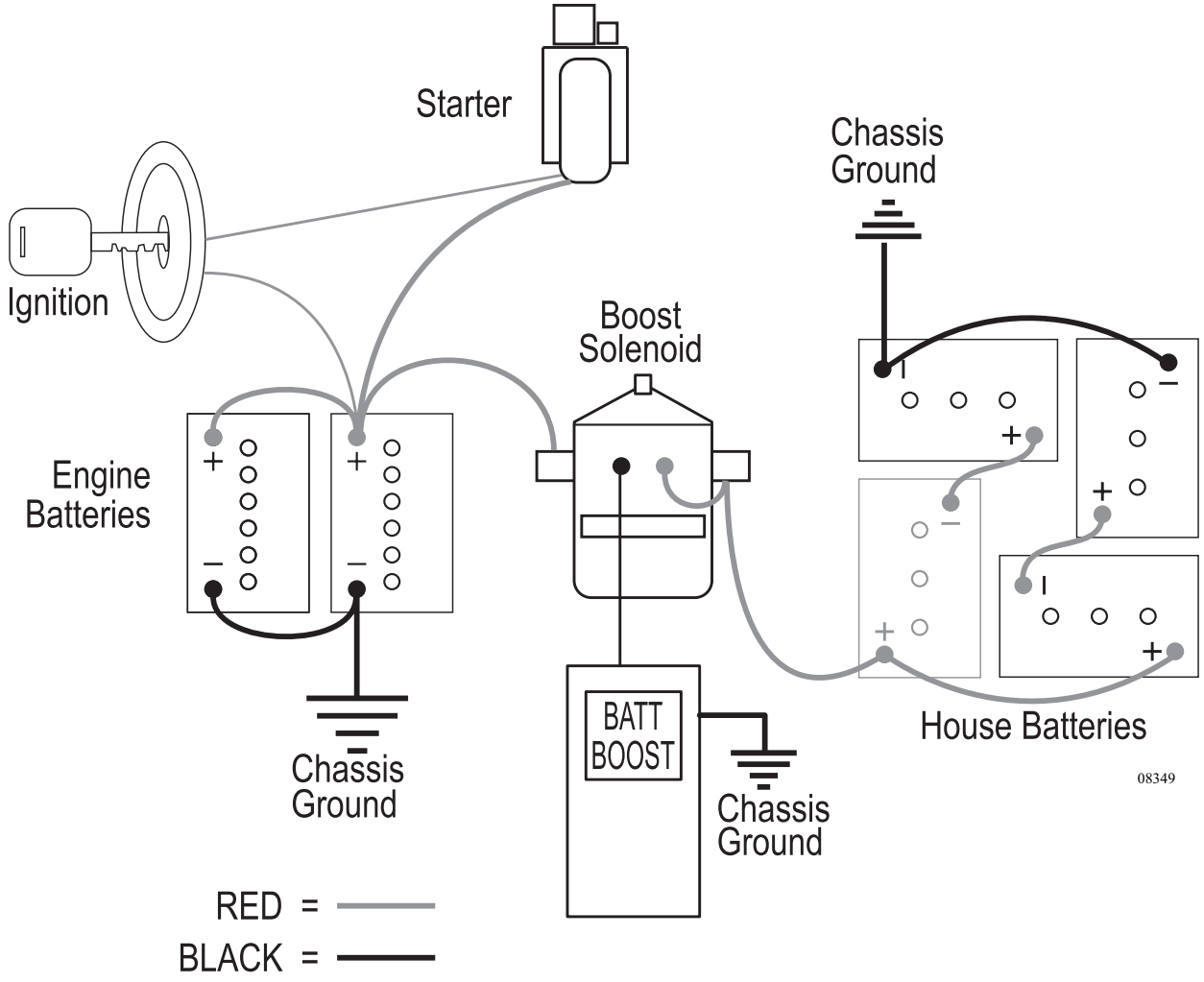

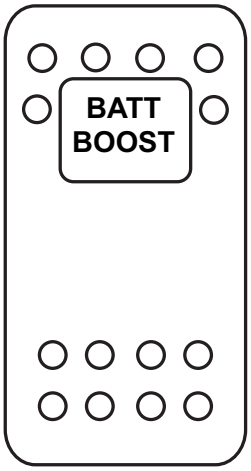


080366

**To Use the Solenoid:**

- With the ignition key off, press and hold the Battery Boost switch for 10 seconds. After 10 seconds, continue to hold the switch down and turn on the ignition. The battery volt gauge on the dash should read at least 12 Volts. If voltage is sufficient, try to start the engine.
- If the engine fails to crank, or does not crank fast enough, discontinue the attempt. Continued attempts will only diminish any remaining surface charge in the chassis battery, ending any future alternative attempts.
- Next, start the generator. This may require using the Battery Boost switch as the generator starts from the engine battery. When the generator is operating, the electrical combination of the generator and the inverter will charge the house batteries.
- Allow the generator to run approximately ½ hour before attempting to start the engine.
- After ½ hour of generator operation, with the generator operating, hold down the Battery Boost switch for one minute. Release the switch for one minute, then engage the switch for one minute. Alternate this cycle three to five times. This will avoid overheating the Boost solenoid.
- Next, hold the switch down for one minute and turn the ignition on. The battery voltage gauge on the dash should indicate at least 12 Volts. If voltage is sufficient with the Boost switch held down, try to start the engine.
- If the engine fails to crank, or fails to crank quickly, the chassis battery may be depleted and the motorhome will require jump-starting or an external charger hooked to the chassis battery. When using jumper cables to start the engine, the cables must connect in a parallel configuration. That is positive (+) to positive (+) and negative battery (-) to negative chassis (-). Always connect the positive (+) before connecting the negative (-). To prevent arcing when disconnecting the cables, disconnect the negative (-) before disconnecting the positive (+).

**WARNING: Batteries can emit explosive gases. Always ventilate the battery compartment prior to any work or service to the batteries. Extinguish all ignition sources and keep all open flame and spark producing items away from battery area.**

**CAUTION: A large amount of electrical current is required to jump-start an engine. The sizes of the battery, alternator and jumper cables supplying the "jump" are current limiting factors. Voltage fluctuations that occur during a jump-start procedure can damage sensitive electronic equipment and charging systems. Wait a sufficient amount of time for a surface charge to build before attempting to crank an engine when using a jump-start procedure. If uncertain about performing a jump-start procedure, contact a professional. Damage and personal injury can occur if this procedure is not performed correctly.**

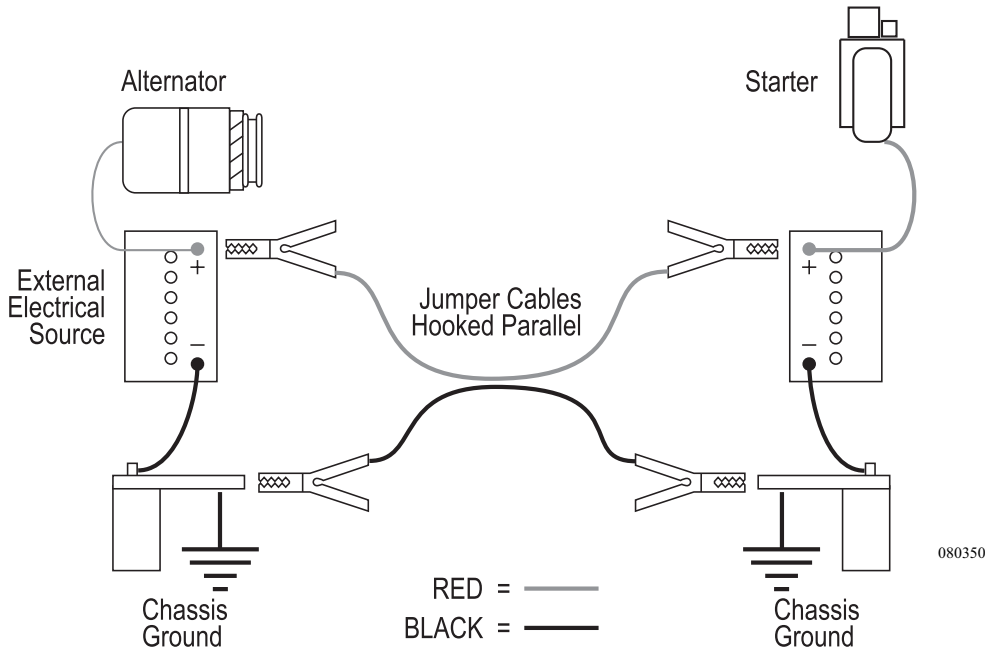


**Jump Starting:**

- When using an external electrical source to connect to the chassis battery, turn the main battery disconnect switches **OFF** prior to hooking up the jumper cables.
- Hook up the cables then wait several minutes to allow a surface charge to build in the chassis battery before attempting to start the engine.
- Turn **ON** the battery disconnect switches and attempt to start the engine. **DO NOT crank the engine more than a few seconds.**
- After the engine has started disconnect the cables. Disconnect the negative (-) cables before disconnecting the positive (+) cables to prevent arcing.
- If the engine does not crank, or cranks slowly, **DO NOT CONTINUE**. Obtain assistance from a qualified technician. Extensive damage, fire or injury can occur.

In the event of a roadside emergency, contact the nearest **Cummins Center** at **1-800-DIESELS (800-343-7357)** for Cummins Customer Assistance Center.

**WARNING: The gases around the battery can explode if exposed to flames, sparks or other ignition sources. An explosion can result in injury or vehicle damage. Batteries contain sulfuric acid, which burns skin, eyes and clothing. Do not connect the end of the second cable to the negative (-) terminal of the battery to be jumped. A spark may cause an explosion of the gases that surround the battery. Connect only to the chassis, away from the battery.**

## TOWING PROCEDURES

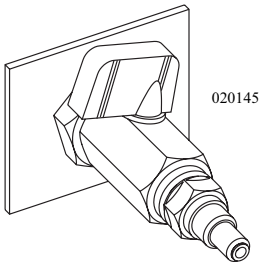


*Air Nipple: Used by towing personnel only.*

If calling a towing company for service, it is recommended to use a low-boy/landall type of trailer. If a tow truck is used it needs to have a support arm that goes under the motorhome and secures to the front axle. Inform the tow company of the axle weights and total weight of the motorhome. Other important information is the length of the motorhome, number of passengers and milepost location. Two tow trucks may be necessary. One to tow the motorhome and the other to tow a trailer or the tow vehicle if it is not operational.

The towing company may need to locate the air nipple to release the air brakes (air brakes only). The air nipple is located in the generator compartment and should be used by towing personnel only. Generally, if the motorhome ever needs to be towed, use the following instructions:

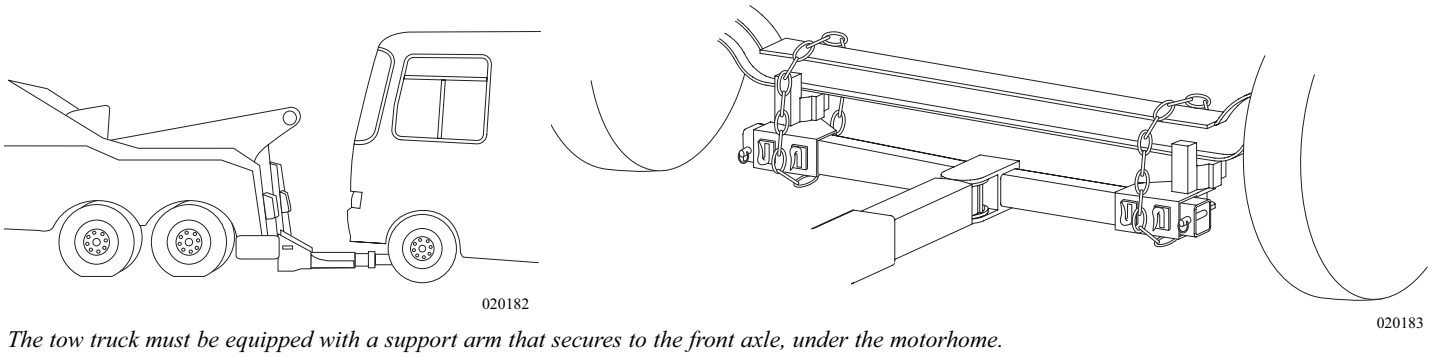


*The tow truck must be equipped with a support arm that secures to the front axle, under the motorhome.*

- Secure any loose or protruding parts if the motorhome is damaged.
- Inspect the points of attachment on a disabled motorhome. If attachment points are damaged, select other attachment points at a substantial frame structural member.
- Never allow anyone to go under a motorhome while it is being lifted by towing equipment unless the disabled motorhome is adequately supported by safety stands.
- Do not tow the motorhome from the rear. Towing from the rear will severely overload the front tires and suspension possibly resulting in tire and/or front suspension failure. Rear frame extensions are not designed to support weight loads imposed by lifting the motorhome from the rear.
- If the rear wheels are disabled, place the motorhome on a flat bed trailer or use a heavy duty dolly under the rear wheels and tow the motorhome from the front.
- The drive shaft must be removed to prevent damage to the transmission. Secure the end caps to prevent losing or contaminating the needle bearings.
- The mud flap may need to be removed to prevent damage due to limited ground clearance.

- When towing a motorhome equipped with the HWH Air-Leveling System, the ignition MUST be left in the ON position so the air suspension will operate. If the ignition system is not functioning, or if chassis voltage is below specification, the motorhome must be placed on a lowboy/landall trailer to prevent suspension damage.

**WARNING: In case the motorhome requires towing, ensure all precautions are followed. The drive shaft must be disconnected and the mud flap may need to be removed. The manufacturer WILL NOT cover damage to the motorhome caused by a towing company.**



## Brake - Disabling Parking Brake

Chock the wheels securely prior to disabling (caging) the park brake. This procedure is for emergency conditions only. Exhaust all other means of releasing the brakes prior to performing this procedure.

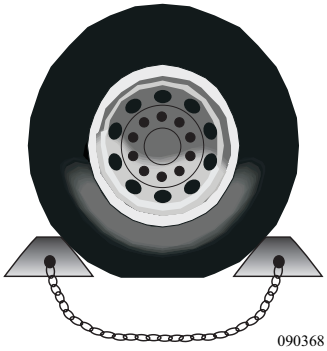


*Properly chocked wheel.*

**Drum Brake Models**

- Place wheel chocks firmly against the wheel before performing this procedure.
- Remove the plug from the center of rear brake chamber on the drive axle.
- Remove the caging tool from its holder on the brake chamber and insert the tool into hole. Turn the tool clockwise to engage.
- Screw nut and washer onto caging tool. Use a wrench to tighten the nut compressing the internal spring releasing the brake.
- Repeat procedure for the other side.
- After towing, or when air pressure is again available, loosen the nut and remove the tool. Return the caging tool to its original location and replace the plug.
- Repeat for the other side.

**WARNING: Failure to securely chock the wheels can result in the motorhome rolling when the spring brakes are released. Severe injury or death can occur.**

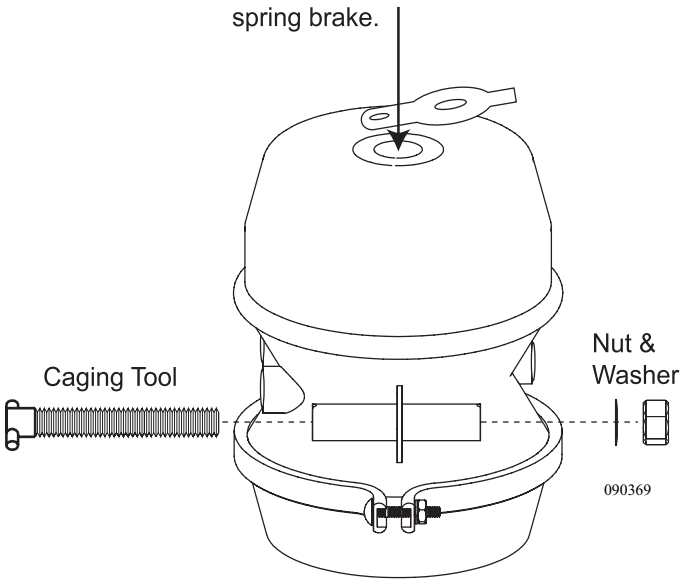

## TIRES

A tire designed for a motorhome is a very technical and precisely engineered product. To obtain maximum wear and the best service out of the tires, it is helpful to understand their function.

A tire is a "container" that holds air. A combination of air and the tire casing support the motorhome and its contents. The following information concerning tires, weighing the motorhome and subsequent tire information are set in the order in which the process is performed or experienced. The motorhome must be weighed fully loaded before the proper tire inflation pressure can be obtained. Since the tire is the only contact the motorhome has with the road surface, it is critical that proper tire pressure be maintained so that it will properly support the weight of the motorhome. Improper tire pressure will lead to abnormal wear or sudden tire failure.

The tire performs other functions, such as traction for moving, stopping, steering and providing a cushion for the motorhome. Modern tire technology blends a unique mix of chemistry, physics and engineering to provide a high degree of comfort, performance, efficiency, reliability and safety. To obtain the maximum wear and best service of the tires it is helpful to understand the components and function of the tires.

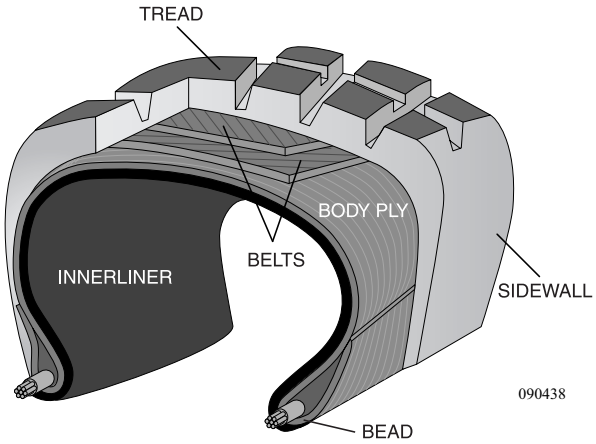


**Tire Components:**
**Tread:** Provides traction and cornering grip.
**Belts:** Stabilize and strengthen the tread.
**Sidewall:** Protects the side of the tire from road and curb damage.
**Body Ply:** Gives the tire strength and flexibility.
**Bead:** Assures an air-tight fit with the wheel.
**Inner Liner:** Keeps air inside the tire.

### *Importance of Air Pressure*

The most important factor in maximizing the life of the tires is maintaining proper inflation. Driving on any tire that does not have the correct inflation pressure for the load of the motorhome is dangerous and may cause premature wear, tire damage and/or loss of control of the motorhome.

An under-inflated tire will build up excessive heat that may go beyond the design limits of the rubber and radial cords, which could result in sudden failure. An under-inflated tire will also cause poor motorhome handling, rapid and/or irregular tire wear and an increase in rolling resistance that results in a decreased fuel economy.

An over-inflated tire will reduce the tire's footprint/contact patch with the road, thus reducing traction, braking capacity and handling of the motorhome. Over-inflation of a tire for the load will result in a harsh ride, uneven tire wear and is susceptible to impact damage.

Maintaining correct tire inflation pressure for each loaded wheel position on the motorhome is of the utmost importance and must be a part of regular motorhome maintenance.

**WARNING: Driving on a tire that is under-inflated can exceed the design limits of the tire and may damage the sidewall. A damaged sidewall can burst upon inflation resulting in serious damage, injury or death. Aged tires are also susceptible to sidewall damage. For safety purposes clear the area of people and pets during tire inflation. Inflate the tires using a remote inflation device.**

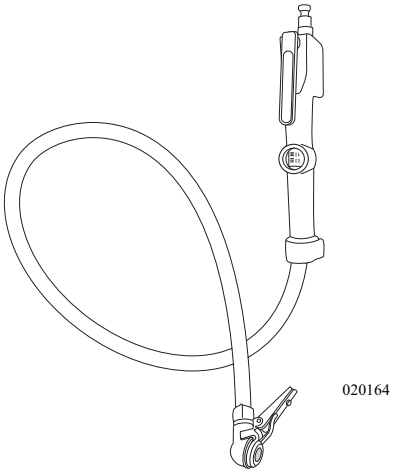




### *Tire Pressure Inflation Guideline*

Federal law requires that the specifications for the tire's maximum load rating be molded into the sidewall of the tire. The amount of air pressure to use is dependent on the weight of the motorhome when it is fully loaded. The chart within this section indicates the weights that can be properly supported by varying air pressures. Decreasing air pressure decreases load carrying capacity.

Always comply with the tire manufacturer's recommended pressure inflation guideline. The actual weight of the motorhome can vary significantly depending on how it is loaded. For optimum tire wear, ride and handling always comply with the manufacturer guideline. A tire inflation chart listing proper inflation pressure for different loads is contained in this section of the manual.

The tires of the motorhome are inflated to pressure(s) appropriate for the actual weight on each axle in the unloaded, shipped condition. When the motorhome is loaded, check and adjust the inflation pressure on each tire as needed.

Always inflate tires to the pressure indicated in the tire chart for the load carried by the tire. **DO NOT OVERINFLATE OR UNDERINFLATE THE TIRES**.

The Gross Axle Weight Rating (**GAWR**) of the axles listed on the federal certification label attached to the motorhome is the maximum allowable loaded weight on an axle.

When the actual loaded weight of the motorhome and the weight on each axle is unknown, follow the recommended tire inflation pressure(s) listed on the federal certification label. When loading a motorhome never exceed the motorhome's Gross Vehicle Weight Rating (**GVWR**) or the GAWR for each axle.

Contact the tire manufacturer for further information concerning proper tire pressure inflation and other tire issues.

## Tire Chart - Goodyear

| TIRE SIZE | MAX Speed Rating (MPH) | Dual (D) Single (S) | INFLATION PRESSURE PSI | | | | | | | | | | | | |
|---|---|---|---|---|---|---|---|---|---|---|---|---|---|---|---|
| | | | 65 | 70 | 75 | 80 | 85 | 90 | 95 | 100 | 105 | 110 | 115 | 120 | 125 |
| 8R19.5 | 75 | D<br>S | 2350<br>2410 | 2460<br>2540 | 2570<br>2680 | 2680<br>2800 | 2780<br>2930 | 2880<br>3060 | 2980<br>3170 | 3070<br>3280 | 3160<br>3400 | **3375(F)**<br>**3500(F)** | | | |
| 225/70R19.5 | 75 | D<br>S | | 2720<br>2895 | 2860<br>3040 | 3000<br>3195 | 3115<br>3315 | 3245<br>3450 | **3415(F)**<br>**3640(F)** | | | | | | |
| 245/70R19.5 | 75 | D<br>S | | 3415<br>3640 | 3515<br>3740 | 3655<br>3890 | **3875(F)**<br>**4080(F)** | 3940<br>4190 | 4075<br>4335 | **4375(G)**<br>**4545(G)** | | | | | |
| 265/70R19.5 | 75 | D<br>S | | | | 3750<br>3970 | 3930<br>4180 | 4095<br>4355 | 4300<br>4540 | 4405<br>4685 | 4560<br>4850 | 4805<br>5070 | 4860<br>5170 | **5070(G)**<br>**5355(G)** | |
| 9R22.5 | 65 | D<br>S | 3120<br>3190 | 3270<br>3370 | 3410<br>3560 | 3550<br>3730 | 3690<br>3890 | 3820<br>4050 | **3950(F)**<br>4210 | 4350 | **4500(F)** | | | | |
| 10R22.5 | 65 | D<br>S | 3690<br>3770 | 3870<br>4000 | 4040<br>4210 | 4200<br>4410 | 4375<br>4610 | 4520<br>4790 | 4670<br>4970 | **4875(F)**<br>**5150(F)** | 4970<br>5320 | 5110<br>5490 | **5250(G)**<br>**5680(G)** | | |
| 11R22.5 | 75 | D<br>S | | | | 4760<br>4990 | 4950<br>5220 | 5120<br>5430 | 5300<br>5640 | 5470<br>5840 | **5750(G)**<br>**6175(G)** | **5800(H)**<br>6240 | 6430 | **6610(H)** | |
| 12R22.5 | 65 | D<br>S | | | | 5190<br>5450 | 5390<br>5690 | 5590<br>5920 | 5780<br>6140 | 5960<br>6370 | 6150<br>6590 | 6320<br>6790 | 6500<br>7010 | **6750(H)**<br>**7390(H)** | |
| 245/75R22.5 | 75 | D<br>S | | 3260<br>3470 | 3425<br>3645 | 3640<br>3860 | 3740<br>3980 | 3890<br>4140 | 4080<br>4300 | 4190<br>4455 | 4335<br>4610 | **4410(G)**<br>**4675(G)** | | | |
| 255/70R22.5 | 75 | D<br>S | | 3585<br>3815 | 3765<br>4005 | 3970<br>4190 | 4110<br>4370 | 4275<br>4550 | 4410<br>4675 | 4455<br>4895 | 4610<br>5065 | 4675<br>5205 | **5070(H)**<br>**5510(H)** | | |
| 265/75R22.5 | 75 | D<br>S | | | 4040<br>4070 | 4205<br>4255 | 4370<br>4440 | 4525<br>4620 | 4685<br>4800 | **4805(G)**<br>4975 | 5150 | **5205(G)** | | | |
| 275/70R22.5 | 75 | D<br>S | | | | | 4535<br>4885 | 4750<br>5080 | 4960<br>5305 | 5165<br>5530 | 5370<br>5750 | 5575<br>5965 | 5775<br>6185 | 5975<br>6400 | **6175(H)**<br>**6610(H)** |
| 275/80R22.5 | 75 | D<br>S | | | | | 4855<br>5265 | 5080<br>5515 | 5305<br>5755 | 5525<br>6000 | 5745<br>6235 | 5965<br>6475 | 6180<br>6710 | **6395(H)**<br>**6940(H)** | |
| 295/75R22.5 | 75 | D<br>S | | | 4690<br>4725 | 4885<br>4945 | 5070<br>5155 | 5260<br>5370 | 5440<br>5510 | **5675(G)**<br>5780 | 5800<br>5980 | **6005(H)**<br>**6175(G)** | 6370 | **6610(H)** | |
| 295/80R22.5 | 75 | D<br>S | | | | 4855<br>5480 | 5100<br>5750 | 5335<br>6020 | 5570<br>6285 | 5805<br>6550 | 6035<br>6810 | 6265<br>7070 | 6490<br>7320 | 6720<br>7580 | **6940(H)**<br>**7830(H)** |
| 315/80R22.5 | 75 | D<br>S | | | | | 5840<br>6415 | 6070<br>6670 | 6395<br>6940 | 6540<br>7190 | 6770<br>7440 | 6940<br>7610 | 7210<br>7920 | **7610(J)**<br>**8270(J)** | 7390<br>8820 |
| 285/75R24.5 | 75 | D<br>S | | | 4740<br>4770 | 4930<br>4990 | 5205<br>5210 | 5310<br>5420 | 5495<br>5675 | **5675(G)**<br>5835 | 6040 | **6175(G)** | | | |

*The motorhome manufacturer is not the author of this chart and makes no representation or warranty concerning the accuracy of the information disclosed by the chart. Holiday Rambler is not responsible for the accuracy of the information disclosed or for any errors within the Tire Inflation Chart.*

## Michelin XZA

### 275/70R22.5 LRH

| PSI | | 90 | 95 | 100 | 105 | 110 | 115 | 120 | 123 | 125 | 131 |
|---|---|---|---|---|---|---|---|---|---|---|---|
| lbs per axle | S | 10100 | 10560 | 11010 | 11460 | 11900 | 12340 | 12780 | 12890 | 13340 | 13890 |
| | D | 19560 | 20460 | 21320 | 22200 | 23060 | 23900 | 24740 | 25580 | | |
| kgs per axle | S | 4620 | 4800 | 5040 | 5220 | 5380 | 5620 | 5800 | 5850 | 6050 | 6300 |
| | D | 8880 | 9240 | 9720 | 10040 | 10400 | 10840 | 11160 | 11600 | | |

### 295/80R22.5 LRH

| PSI | | 75 | 80 | 85 | 90 | 95 | 100 | 105 | 110 | 115 | 120 |
|---|---|---|---|---|---|---|---|---|---|---|---|
| lbs per axle | S | 10150 | 10720 | 11290 | 11860 | 12430 | 13000 | 13580 | 14160 | 14740 | 15660 |
| | D | 17750 | 18800 | 19850 | 20900 | 21930 | 23000 | 24000 | 25100 | 26110 | 27800 |
| kgs per axle | S | 4605 | 4865 | 5121 | 5380 | 5640 | 5900 | 6160 | 6425 | 6690 | 7100 |
| | D | 8050 | 8530 | 9005 | 9480 | 9950 | 10435 | 10890 | 11385 | 11845 | 12600 |

### 315/80R22.5 LRL

| PSI | | 85 | 90 | 95 | 100 | 105 | 110 | 115 | 120 | 125 | 130 |
|---|---|---|---|---|---|---|---|---|---|---|---|
| lbs per axle | S | 12490 | 13540 | 14140 | 14740 | 15320 | 15900 | 16480 | 17060 | 17620 | 18180 |
| | D | 23540 | 24640 | 25740 | 26800 | 27880 | 28960 | 30000 | 31040 | 32040 | 33080 |
| kgs per axle | S | 5880 | 6120 | 6440 | 6680 | 6900 | 7200 | 7440 | 7740 | 7960 | 8250 |
| | D | 10680 | 11120 | 11720 | 12120 | 12560 | 13120 | 13520 | 14040 | 14480 | 15000 |

### 385/65R22.5 LRJ

| PSI | | 85 | 90 | 95 | 100 | 105 | 110 | 115 | 120 | 125 | 130 |
|---|---|---|---|---|---|---|---|---|---|---|---|
| lbs per axle | S | 14120 | 14780 | 15440 | 16080 | 16720 | 17360 | 17980 | 18600 | 19220 | 19840 |
| | D | | | | | | | | | | |
| kgs per axle | S | 6420 | 6680 | 7020 | 7280 | 7520 | 7860 | 8100 | 8440 | 8680 | 9000 |
| | D | | | | | | | | | | |

*The motorhome manufacturer is not the author of this chart and makes no representation or warranty concerning the accuracy of the information disclosed by the chart. Holiday Rambler is not responsible for the accuracy of the information disclosed or for any errors within the Tire Inflation Chart.*

## Inspecting & Pressure

Regularly check the tire pressure. A nail or screw can lodge in a tire and create a slow leak. The object may eventually be spotted on a front tire or an outside rear dual. However, if there is a slow leak on an inside dual, it will probably go unnoticed. If you begin driving unaware that an inside dual tire is low on air pressure or is flat, very quickly (in most cases a few miles) the outside rear tire will heat up due to carrying double the load. This can lead to failure of the outside tire resulting in two flat tires on the same side of the same axle.

Check the tire pressure every two weeks or at least once a month and before any major trip. Check the tire pressure every "drive" morning on both long and short trips (driving a day or less). Check the tire pressure before leaving on a trip and again before starting your trip home. Check the tire pressure before storing the motorhome for any length of time. More importantly, check the tire pressure when removing the motorhome from storage.

Check the tire pressure when the tires are "cold" and have not been driven for more than one mile. The rated load capacity for cold inflation pressure is based on ambient temperature. If you must check the tires when they are warm or hot, allow for a slight increase in air pressure. The pressure should be within a couple of pounds of each other on the same axle. Never let air out of a hot tire.

When checking the inflation pressure, use a high-quality truck tire air gauge with an angle dual head. This type of pressure gauge can check the pressure of the inner dual wheel that has the valve stem pointing outward and the outer wheel has the valve stem pointing inward. Nothing should restrict the ability to easily check tire air pressure daily when traveling in the motorhome. Use valve stem caps with a positive seal to prevent air escaping from the valve stem. If there are extension hoses on the valve stem, make sure they are good quality reinforced stainless steel braid. Attach hoses securely to the outer wheel.

Optimum tire performance is achieved at proper inflation pressure for the load carried. Do not mix tires of different tread patterns on the same axle. The difference in traction could cause rear end gear fight and mechanical damage to the drive train. Never mix tires of a different size or construction on the same axle.

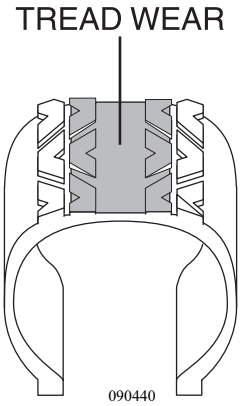


*Example of Overinflation*
*More wear in center.*

**Higher than recommended pressure can cause:**

- Hard ride.
- Tire bruising or carcass damage.
- Rapid tread wear in the center of the tire.

**WARNING: Improperly inflated tires can effect handling or cause sudden tire failure possibly resulting in loss of vehicle control. Always use an accurate tire pressure gauge when checking tire pressure.**

**Lower than recommended pressure can cause:**
- Tire squeal on turns.
- Separations.
- Rapid and uneven wear on the edges of the tread.
- Circumferential breaks.
- Tire container may bruise or rupture.
- Higher risk of road hazard.
- Tire cord breakage.
- Loss of casing durability.
- Excessive tire temperature.
- High fuel consumption.
- Reduced handling quality.

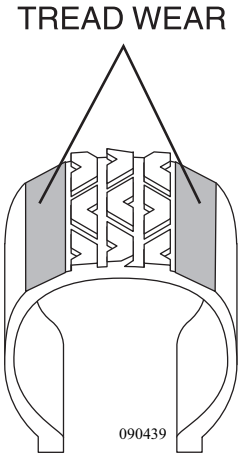

*Example of Underinflation*
*More wear on edges.*

**Unequal tire pressures on same axle can cause:**
- Uneven braking, swerve upon acceleration.
- Steering lead, torque steer.
- Reduced handling quality.

**WARNING: Driving on a tire with low air pressure can exceed the design limits of the tire. Damage to the sidewall of the tire can occur. A damaged sidewall can burst upon inflation causing serious damage, injury or death. Aged tires are also susceptible to sidewall damage. For safety purposes clear the area of people and pets during tire inflation. Inflate tires using a remote inflation device.**

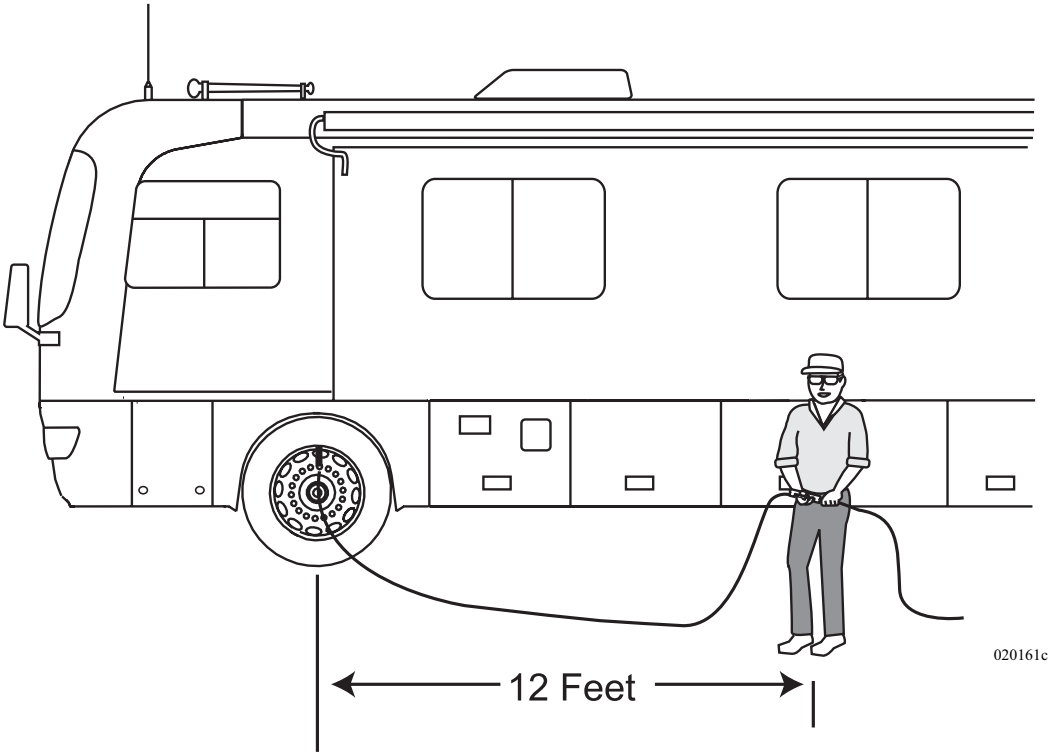

## *Air Pressure Checklist*

1. When checking air pressure in the tires, make sure the tires are cool before increasing or reducing air pressure. Even driving a short distance can heat up tires.

**NOTE: If the motorhome must be driven a distance to get air, check and record the tire pressure first and add the appropriate air pressure when reaching the pump. It is normal for tires to heat up and the air pressure inside to go up as driven. Never "bleed" or reduce air pressure when tires are hot.**

2. Remove the cap from the valve on one tire.
3. Firmly press a tire gauge onto the valve and record reading.
4. Add air to achieve recommended air pressure.
5. If the tire is over filled, release air by pushing on the metal stem in the center of the valve. Then recheck the pressure with the tire gauge.
6. Replace the valve cap.
7. Repeat with each tire.
8. Visually **inspect** the tires to make sure there are no nails, or other objects embedded that could poke a hole in the tire and cause an air leak.
9. Check the sidewalls to make sure there are no gouges, cuts, bulges, or other irregularities.

**NOTE: Air pressure in a tire goes up (in warm weather) or down (in cold weather) 1 to 2 pounds for every 10 degrees of temperature change.**

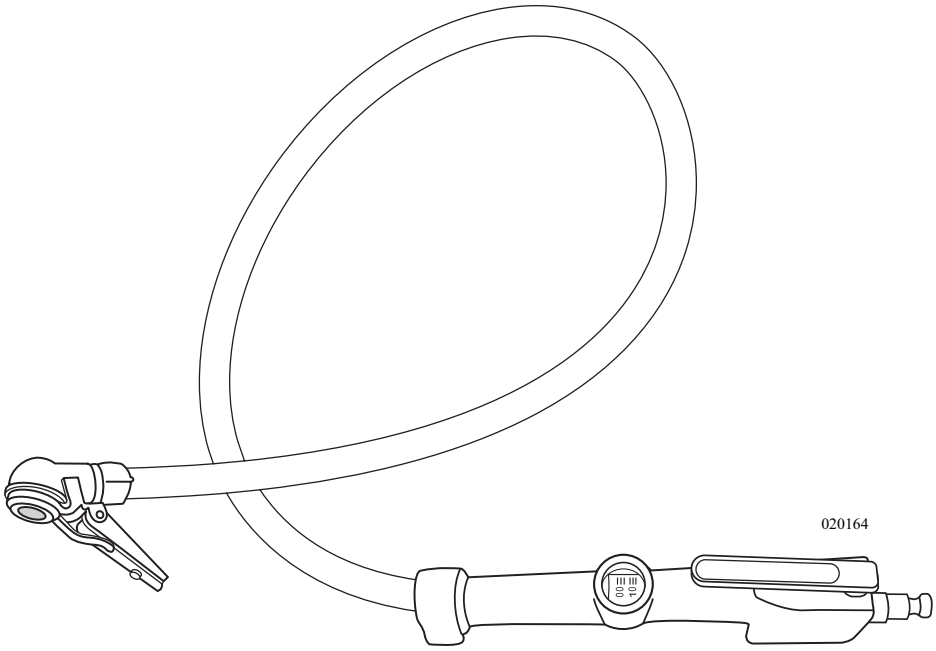

Extreme caution must be taken to ensure that the tires are fully supported when placing blocks under the tires. The load on the tire should be evenly distributed on the support block. In the case of dual tires, distribute the load evenly on blocks for both tires. If not properly supported, the steel cables in the sidewall of the tires may be damaged and could lead to premature fatigue of the sidewall.

**CAUTION: Supporting the tires prevents damage to the sidewall of the tires and does not prevent tire roll.**

# Tire "Support" Methods

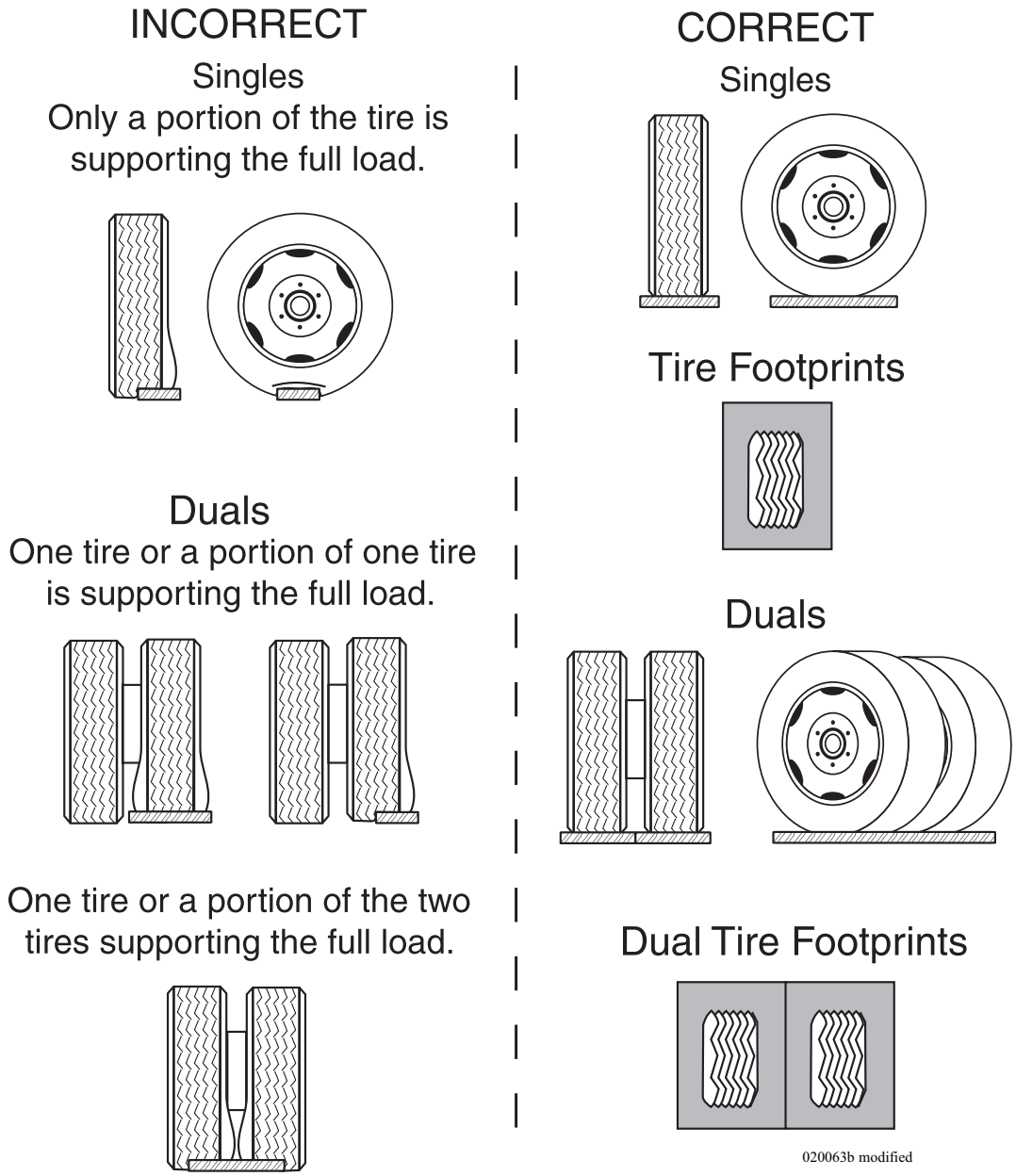

### Tire Vibration

Sudden tire failure or blowout is often preceded by tire vibration. Some other symptoms that can cause tire failure are a bulge in the sidewall or swelling in the tire carcass. Striking an object or large hole in the road surface can damage a tire. Inspect the tires immediately after such an occurrence. Continue to inspect the tires periodically thereafter in case minor damage occurred. Rotation forces can continue to stress damaged areas that can manifest later in a sudden tire failure. If an unusual vibration begins, or a bulge is noticed in a sidewall, have the tires evaluated by a qualified professional as soon as possible.

### Tire Rotation

Tire rotation can increase the useful life of the tires by achieving uniform wear on all of the tires. The first tire rotation is the most important in determining which rotation pattern to use. Have the tire manufacturer determine the tire rotation pattern. Any unusual or unique wear patterns, or indications of uneven wear that may have developed, should be evaluated for possible tire rotation. Misalignment, imbalance or other mechanical problems may exist and will need corrected prior to rotation.

After a tire rotation, check and adjust the inflation pressures for the actual loads of the wheel position accordingly.

Tires are warranted by the tire manufacturer. The motorhome manufacturer is not responsible for warranty coverage or tire wear.

### Tread

Tires must be replaced when the tread is worn down to 4/32 of an inch on the front and 2/32 of an inch on the rear in order to prevent skidding and hydroplaning. If there are questions regarding tread wear consult a tire dealer as soon as possible.

Built in tread wear indicators, or “wear bars,” which look like narrow strips of smooth rubber across the tread will appear on the tire when the tread is worn down to one-sixteenth of an inch. When these “wear bars” are noticed, the tire is worn out and should be replaced.

Visually check the tires for signs of uneven wear. The tire may have irregular tread wear if there are high and low areas or unusually smooth areas. Consult the tire manufacturer as soon as possible.

**WARNING: In many instances the life of the tires on the motorhome is not determined by mileage but by age. Tires are subject to weathering. Weathering cracks run in circumference with the tire. Though the sidewall of the tire may look fine and be structurally sound, weathering can occur inside the well of the tread, therefore replacement may be determined not by mileage but age. Have the tire manufacturer inspect the tires for age weathering.**

Road oil will cause deterioration of the rubber. Dirt buildup will help hold chemicals in the air next to the tire and will also cause deterioration.

When cleaning any rubber product, proper care and methods in cleaning must be used to obtain the maximum service years out of the tires. Use a soft brush and a mild detergent to clean the tires. If a dressing product is used to "protect" the tires from aging, use extra care and caution. Tire dressings that contain petroleum products or alcohol may cause deterioration or cracking.

In many cases it is not the dressing that causes a problem, but the chemical reaction that subsequently occurs. When these same dressing products are used on a passenger car tire that is replaced every three to four years, it is rare to see a major problem. However, in most cases, motorhome tires may last longer due to limited annual mileage, and exposure.

**Hub Piloted Mounting:**

- Before using flange nuts that have already been used in service, apply two drops of oil at one point between the flange and hex. This will allow parts to rotate freely and provide the proper clamping force when tightened. Use any common lubricant typically used for fasteners. Examples are motor oil and general purpose lubricating oils. Excessive lubricant is not desirable, this will not improve the nut torquing performance. Excessive lubricant makes the nuts hard to handle, attracts dirt to the nuts and may cause unsightly appearance to the wheel. Only used nuts need to be lubricated.
- Since flange nuts generate higher clamping force always use grade eight studs with hub mount wheels.
- Before installing the wheels, lubricate the hub pilot pads with a drop of oil to prevent galling. Do not lubricate any other wheel or hub surface.
- For a hub with intermittent pilot pads, position a pad at the twelve o'clock position to center the wheel and reduce runout.

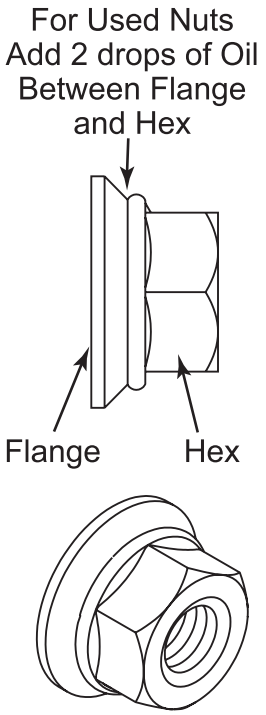


090268c

**NOTE: Loosen and tighten lug nuts in a star pattern sequence. Sequence tighten to 50 ft. lbs. first, then sequence tighten to 500 lbs. Over-tightening can cause distortion.**

**WARNING: Never use wheels or lug nuts different than the original equipment as this could damage the wheel or the mounting system. Damage to the wheel or mounting system could cause a wheel to come off while the recreational vehicle is in motion.**

**Front Wheels:**

Slide the front wheel over the studs, being careful not to damage stud threads. Snug the nuts in sequence, do not tighten them fully until all have been seated. Tighten the nuts to 500 ft.lbs in sequence (as shown in the illustration).

**Dual Rear Wheels:**

Slide the inner dual wheel over the studs, being careful not to damage the stud threads. Align the handholds for valve access and slide the outer dual wheel over the studs, again being careful not to damage the stud threads.

Snug the nuts in sequence, do not tighten them fully until all have been seated. Tighten the nuts to 500 ft. lbs. using the sequence (as shown in the illustration). The hub mount wheels use two piece flange cap nuts for both front and rear applications. No inner cap nuts are required.

**Torque the Nuts Properly:**

- Tighten the wheel nuts to the recommended lug nut torque. Do not over tighten.
- Maintain the nut torque at the recommended level through planned periodic checks or at 10,000 miles intervals, whichever comes first.
- If air wrenches are used they must be periodically calibrated for the proper torque output. Use a torque wrench to check the air wrench output and adjust the line pressure for the correct torque.

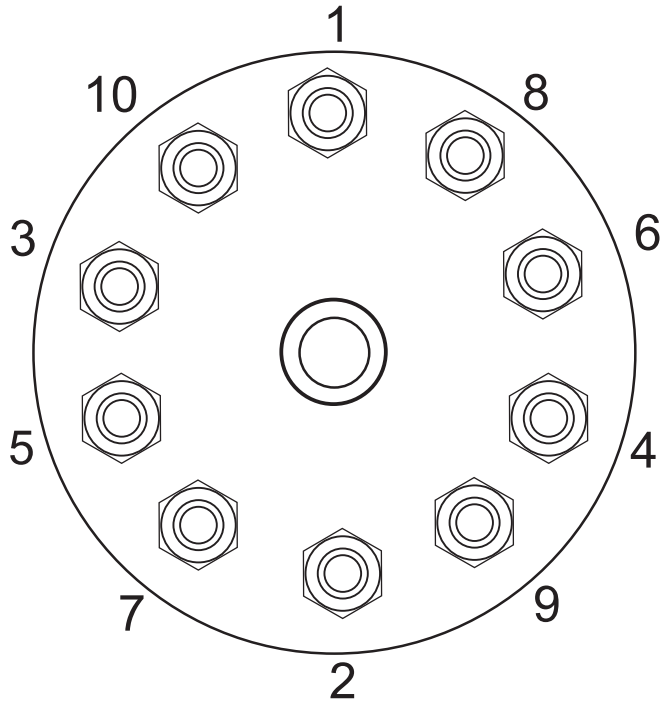


Nut Tightening Sequence

090268 copy 2

## Storage of Tires - Long Term

The motorhome is designed for recreation, not long-term storage. However, unless you are living in your motorhome full-time you will have a need to store it. Rubber tires age faster when not being used. A cool, dry, sealed garage is the preferred method of storage. Many recreational vehicles are stored outside in the elements. Some storage surfaces may cause tires to age prematurely. Placing a barrier (i.e. cardboard, plastic or plywood) between the tire and the storage floor/ground surface will help to protect the tires.

When the tire is anticipated to be out of service for a period of thirty days or more, the motorhome should be in the long-term storage condition. The ideal conditions include placing the motorhome on "jack stands" to remove all weight from the tires. Then the inflation pressure can be reduced by 15 psi. However, this is not always possible. With a few simple steps, the aging effects from long-term storage or a non-use period can be reduced.

**NOTE: If the motorhome is stored with weight on the tires they should be inflated to the maximum inflation pressure as indicated on the Federal Identification Tag.**

- Thoroughly clean the tires.
- Unload the motorhome so there is minimum weight on the tires.
- Ensure the surface is reasonably level, firm, clean and has good drainage.
- Move the motorhome every three months to prevent cracking in bulge areas as well as flat spotting from prolonged sidewall strain and tread deflection.
- Cover the tires to block direct sunlight and ultraviolet rays.
- Store the motorhome out of a high ozone area.

Failure to take these steps can cause early deterioration and shorten the life of the tires. The type of surface the motorhome is parked upon will have an affect on how much moisture accumulation occurs on the chassis and flooring. Moisture can eventually seep into the interior. Further, the type of surface can affect the tires.

- Gravel covered parking areas still allow moisture to evaporate from the ground, through the gravel and to the underside of the motorhome.
- Sealed concrete pads allow better ventilation under the motorhome.
- Storage buildings with sealed concrete floors or heated storage facilities greatly reduce the amount of moisture accumulation and protect the motorhome from moisture damage.
- Wet, oily, or greasy surfaces should be avoided. Highly reflective surfaces, such as sand or snow, should be avoided. Heat absorbent surfaces, such as black asphalt, will cause problems as well.

Before removing the motorhome from long-term storage thoroughly **inspect** each of the tires. This means a close examination of each tire's tread area and air pressure. If the pressure check indicates the tires have lost air during storage, inflate them to the correct pressure for the current load before putting the motorhome into service

## WEIGHING THE MOTORHOME

Improperly inflated tires or suspension that is incorrectly loaded can result in poor fuel economy, poor handling and over-stressed chassis components. Vehicle loading affects tire inflation pressure and the load carried by each axle. Motorhome axle configuration and floor plan styles will require different weighing procedures.

**WARNING: Improperly inflated or overloaded tires can cause a blowout. An overloaded axle can cause a component failure of the suspension system. Tire blowouts or broken suspension components can lead to loss of vehicle control resulting in property damage, personal injury or death.**

**CAUTION: If actual weight carried by any tire is below the tire chart weight specification a minimum tire pressure of at least 75 psi must be maintained. Tire pressure below 75 psi can overheat and damage the tire casing leading to premature tire failure or blowout.**

**Slide-out Tire Pressure:**

A motorhome equipped with slide-out room(s) will weigh slightly heavier on the roadside. The tire inflation pressure of the roadside tires determines the inflation pressure for all tire(s) on that axle. This is due to the weight transfer that occurs when cornering. Approximately the same weight load will be transferred to the curbside around left-hand corners.

**NOTE: When weighing a motorhome equipped with a slide-out room, each tire on any axle must be inflated to the same pressure. The wheel position carrying the most weight will determine the tire inflation pressure for each tire of that particular axle.**

**Tag Axle Motorhome (Roadmaster Chassis):**

A motorhome equipped with a tag axle will require adjustment to the air pressure regulator for the tag axle. Adjustment of the regulator helps maintain proper axle weight distribution ratios. The adjustable regulator and gauge package is located in the engine compartment on the driver side. The regulator controls the amount of air pressure in the tag axle air bags. Increasing the regulator air pressure gauge reading increases the amount of air pressure in the tag axle air bags, which increases the downward force of the tag axle. Applying more downward force to the tag axle increases the weight carried by the tag axle. Increasing the weight carried by the tag axle decreases the weight carried by the drive axle and slightly increases the weight transferred to the front steering axle.

Proper weight distribution, load management and operating within established limitations will aide in safe and enjoyable travel. The information contained in this publication outlines guidelines and provides worksheets for weighing procedures.

Proper weight distribution and load management is an individual responsibility. Once the process and procedures are understood, weighing the motorhome really isn't complicated. In order to correctly manage load and weight distribution, more than one weight measurement will need to be taken and/or repeated. Each wheel position must be weighed to accurately determine the weight placed on each wheel position for proper weight computations. The entire process of weigh management begins with the Gross Vehicle Weight Rating as listed on the Federal Certification Label. **This weight cannot be exceeded.**

Next would be the Unloaded Vehicle Weight. This simply means the weight of the motorhome full of fuel with engine fluid level full. Cargo Carrying Capacity can then be calculated. Once Cargo Carrying Capacity is determined then the motorhome can be loaded. After the motorhome is loaded it will need to be weighed again. These weight measurements will be used to ensure proper weight distribution and tire inflation pressures.

**Weight Terms**

Numerous Federal, State and local governments mandate weight limits. Understanding the terminology and performing proper weighing procedure will help eliminate confusion. It is important to understand there are two reasons to weigh the motorhome. One to find out the **Cargo Carrying Capacity (CCC)** and the other to ensure no axle is overloaded.

The **Gross Axle Weight Rating (GAWR)** of the axles is listed on the federal certification label attached to the motorhome. This is the maximum allowable loaded weight on a particular axle. This label is generally located to the rear of the driver's seat, on the wall.

When the actual loaded weight of the motorhome, and the weight on each axle is unknown, follow the recommended tire inflation pressure(s) listed on the federal certification label. When loading a motorhome never exceed the motorhome's **Gross Vehicle Weight Rating (GVWR)** or the **GAWR** for each axle.

**NOTE: Contact the tire manufacturer for further information concerning proper tire pressure inflation and other tire issues.**

The **Gross Vehicle Weight Rating (GVWR)** and **Gross Axle Weight Rating (GAWR)** Listed on the Federal Certification Label attached to the motorhome will detail the chassis manufacturer's and/or the RV manufacturer's total vehicle maximum weight rating and per axle weight rating.

The **GVWR** is the maximum total weight for which the motorhome is rated - including passengers, fluids and cargo. The **GAWR** is the maximum weight for which a single axle is designed. The tires, wheels, axle, the motorhome frame and/or other components of the motorhome, could limit these per axle and total maximum weight ratings.

The Federal Certification Label is a guide in knowing the maximum loaded axle weight rating **GAWR**, and subsequently the correct tire inflation pressure for that weight. Every recreational vehicle, even of the same make and model, will vary in actual loaded axle weights because of different options and personal loads.

While the actual loaded axle weight should be below the **GAWR**, the motorhome must be weighed in a loaded condition to know its actual weight. Weigh the front axle, the total unit and the rear axle. This includes the tag axle. It is possible for a motorhome to be within the **GVWR** yet overloaded on an axle. It is even possible for one wheel position to be overloaded, even though the **GAWR** has not been exceeded. For this reason it will be necessary to weigh each wheel position of the motorhome to give a clear indication of exactly how the weight of the motorhome is distributed.

Instructions and diagrams are presented on the following pages. When the total weight and the weight on each axle is known, the tire load data chart in this manual will show the correct cold inflation pressure per tire for each axle.

There are two important factors to consider when loading the motorhome: **total weight** and **balance**. When loading heavy objects keep them as low as possible, preferably on the floor or below in storage compartments. Load weight must be distributed as evenly as possible. The following is an explanation of commonly used weight abbreviations.

- **Gross Vehicle Weight Rating (GVWR):** Maximum permissible weight of this motorhome. **GVWR** is equal to or greater than the sum of **UVW** plus **CCC**.

- **Unloaded Vehicle Weight (UVW):** Weight of this motorhome as built at factory with full fuel, engine oil and coolants. **UVW** does not include cargo, fresh water, LP-Gas, occupants or dealer installed accessories.

- **Cargo Carrying Capacity (CCC):** Equal to **GVWR** minus each of the following: **UVW**, full fresh potable water weight (including water heater), full LP-Gas weight, and **SCWR**. Tongue weight of towed vehicle and dealer installed equipment will reduce **CCC**.

- **Gross Combination Weight Rating (GCWR):** The maximum allowable loaded weight of this motorhome and any towed trailer or towed vehicle.

- **Gross Axle Weight Rating (GAWR):** Load-carrying capacity specified by manufacturer of a single axle system, as measured at tire ground interfaces.

- **Sleeping Capacity Weight Rating (SCWR):** The manufacturer's designated number of sleeping positions multiplied by 154 pounds.

**Tire Pressure:**

A motorhome may weigh slightly heavier on one side than on the other. Tire inflation pressure of the heavier side tires determine the inflation pressure for all tire(s) on that axle due to the weight transfer that occurs when cornering. The weight load will be transferred on the opposite side from the direction in which the motorhome is cornering.

Improperly inflated tires, or suspension that is incorrectly loaded, can result in poor fuel economy, poor handling and over-stressed chassis components. Vehicle loading will influence tire inflation pressure and the load carried by each axle. This is why each wheel position must be weighed. Motorhome axle configuration and floor plan styles will require different weighing procedures.

**NOTE: When weighing a motorhome, each tire on any axle must be inflated to the same pressure. The wheel position carrying the most weight will determine the tire inflation pressure for each tire of that particular axle.**

**Tag Axle Motorhome (Roadmaster Chassis):**

Motorhomes equipped with a tag axle will require adjustment to the air pressure regulator for the tag axle. Adjustment of the regulator helps maintain proper axle weight distribution ratios. The adjustable regulator and gauge package is located in the engine compartment on the driver side. The regulator controls the amount of air pressure in the tag axle air bags. Increasing the regulator air pressure gauge reading increases the amount of air pressure in the tag axle air bags, which increases the downward force of the tag axle. Applying more downward force to the tag axle increases the weight carried by the tag axle. Increasing the weight carried by the tag axle decreases the weight carried by the drive axle and increases the weight transferred to the front steering axle.

**Tag Axle Regulator Adjustment:**

The pressure regulator adjustment knob has a positive lock. Pull up on the knob to unlock, push down on the knob to lock. Tighten or turn the knob clockwise to increase air pressure. Loosen or turn the knob counterclockwise to decrease air pressure. When decreasing regulator air pressure the regulator will release excess air through the regulator discharge port. Each time an increase or decrease of air pressure to the regulator is made an air pressure stabilization procedure will also be performed.

The stabilization procedure equalizes the regulator to hold a constant air pressure setting.

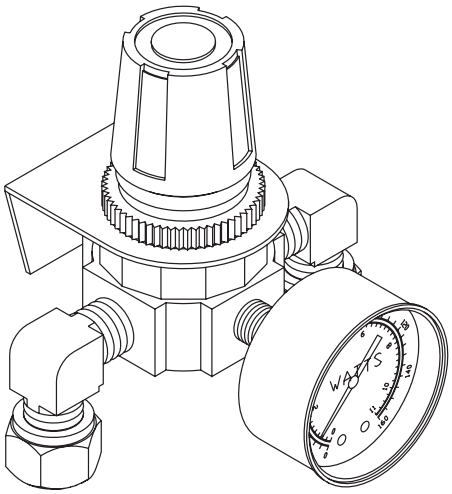

090256

*Pull knob up to unlock.*
*Push down knob to lock.*

**To perform the stabilization procedure:**

- Start the motorhome and allow the air system to reach a full charge, indicated by the release of air from the air dryer.
- Raise the tag axle using the tag axle switch on the shift panel. Allow approximately 20 seconds for the system to discharge air from the tag axle air bags.
- Lower the tag axle. The regulator will hold the new air pressure setting.
- Push down on the regulator adjustment knob to lock the setting.

When increasing the air pressure setting allow approximately a two-pound pressure increase before the stabilization process. Example: If the desired setting is 30 psi, slowly rotate the regulator adjustment knob clockwise to 28 psi. Perform the stabilization procedure. Regulator setting will stabilize to approximately 30 psi. When decreasing the air pressure setting rotate the regulator adjustment knob counterclockwise, allowing the excess air to be discharged. Next, perform the stabilization procedure.

**Scales:**

Certified public scales are located in a variety of places such as moving and storage lots, farm suppliers with grain elevators, gravel pits, recycling companies and large commercial truck stops.

If you are not aware of a nearby public scale, check the local area telephone book yellow pages under "scales-public" section or "weighers." A nominal fee will be charged, but this is money wisely spent.

Weight scale types and weighing methods determine the procedure used to calculate proper tire inflation pressure and axle loading. There are several types of scales in use today. A platform scale will allow the entire motorhome to fit on the scale, which will read the **GVW** with only one scale recording required. A segmented platform scale is designed to weigh only one axle at a time, which may require two or three scale readings to determine the **GAW** or **GVW** total. A single axle scale enables one axle at a time. Some scales will read only one wheel position at a time due their physical size. Several scale readings may be required to determine the **GAW** or **GVW** total, regardless of scale type. Each wheel position will require weighing. This is referred to as a six point weigh. This type of weighing procedure will accurately determine what the correct tire inflation pressure should be. Depending on the type of scale being used, several different scale readings may be required.

**NOTE: The most accurate method to determine proper tire pressure is a four-corner or six point weigh. Each wheel position must be weighed independently. Weighing the entire axle will not accurately determine the total weight carried by that wheel position. When calculating the drive axle dual tire pressure using a independent corner weigh method, divide the total weight by two to determine the weight carried by each tire. Each wheel position must be weighed and recorded.**

During weighing, the scales as well as the motorhome must be as level as possible to obtain an accurate scale reading. Even though an axle or side is not physically on the scale, a definite lean in the motorhome will produce inaccurate scale readings.



## *Weight Label (Example)*

**MODEL YEAR:** _____ **MAKE:** _____ **MODEL:** _____

**UNIT NO.** _____ **CHASSIS VIN:** _____

| | | LBS. | KGS. |
|---|---|---|---|
| **GVWR** | (Gross Vehicle Weight Rating) is the maximum permissible weight of this fully loaded motorhome ..... | _____ | _____ |
| **UVW** | (Unloaded Vehicle Weight) is the weight of an exemplar Motorhome as manufactured at the factory with full fuel, engine oil and coolants (*1) ..... | _____ | _____ |
| **SCWR** | (Sleeping Capacity Weight Rating) is the manufacturer's designated number of sleeping positions multiplied by 154 pounds (70 kilograms) ..... | _____ | _____ |
| **CCC** | (Cargo Carrying Capacity) is the GVWR minus each of the following: UVW, full fresh (potable) water weight (including water heater), full LP-Gas weight and SCWR (*1)..... | _____ | _____ |
| **GCWR** | (Gross Combination Weight Rating) means the maximum allowable loaded weight of this motorhome and any towed trailer or towed vehicle.(*2)..... | _____ | _____ |
| | FACTORY INSTALLED OPTIONS are options installed at the factory but do not include dealer installed after market equipment... | _____ | _____ |

**CARGO CARRYING CAPACITY (CCC) COMPUTATION**

| | | |
|---|---|---|
| GVWR ..... | _____ | _____ |
| minus UVW ..... | _____ | _____ |
| minus fresh water (*3) weight of ___ gallons @ 8.3 lbs./gal ..... | _____ | _____ |
| minus LP-Gas weight of ___ gallons@ 4.2 lbs./gal ..... | _____ | _____ |
| minus SCWR of ___ persons @ 154 lbs./person..... | _____ | _____ |
| CCC for this motorhome (*4) ..... | _____ | _____ |

**WARNING: CONSULT OWNER MANUAL(S) FOR SPECIFIC WEIGHING INSTRUCTIONS AND TOWING GUIDELINES INCLUDING AUXILIARY BRAKE REQUIREMENTS FOR ANY TOWED TRAILER OR TOWED VEHICLE.**

**Factory installed options do not include dealer installed after market equipment.**

**WARNING:DO NOT EXCEED THE GVWR, GCWR AND/OR GAWR AFTER LOADING YOUR MOTORHOME WITH WATER, FUEL, PASSENGERS AND CARGO. GAWR (Gross Axle Weight Rating) means the maximum permissible load weight a specific axle is designed to carry. See Federal Certification Label for disclosure of The GAWR for each axle.**

(*1) The UVW and CCC have been determined by weighing an exemplar motorhome with some but not all optional equipment available for each model year, make and model of motorhome. The result of the weighing of the exemplar motorhome is then used in calculating the UVW and CCC of other motorhomes of same model year, make and model. Your actual UVW and CCC may vary based upon options ordered. Please contact the manufacturer for the actual weight of each option.
(*2) Consult your Owner's Manual for towing limitations, restrictions and other guidelines.
(*3) Your motorhome's fresh water tank and water heater taken together determine the gross fresh water capacity. Your usable fresh water capacity, however, may be less.
(*4) Dealer installed equipment and towed vehicle tongue weight will reduce CCC.

100179c example

EXAMPLE

## *Six Point Weighing (Example)*

The motorhome must be weighed fully loaded to obtain accurate scale readings and to determine the proper tire pressure. All slide rooms, must be in retracted position.

- Record the Front Axle **Gross Axle Weight Ratings (GAWR)** and divide it by two. Example: Front Axle **GAWR** taken from the motorhome Vehicle Certification Label is 13,000 lbs. Using chart below, record 6,500 lbs. on Scale A and D, line 1.
- Weigh the driver side front corner (Scale A) and record weight on chart Scale A, line 2. Example: 5,000 lbs.
- Weigh the passenger side front corner (Scale D) and record weight on chart Scale D, line 2. Example: 4,000 lbs.
- Record the Rear axle **Gross Axle Weight Ratings (GAWR)** and divide it by two. Example: Rear axle **GAWR** taken from the motorhome Vehicle Certification Label is 20,000 lbs. Using chart below, record 10,000 lbs. on Scale B and E, line 1.
- Weigh the driver side rear corner (Scale B) and record weight on chart Scale B, line 2. Example: 7,100 lbs.
- Weigh the passenger side rear corner (Scale E) and record weight on chart Scale E, line 2. Example: 6,900 lbs.

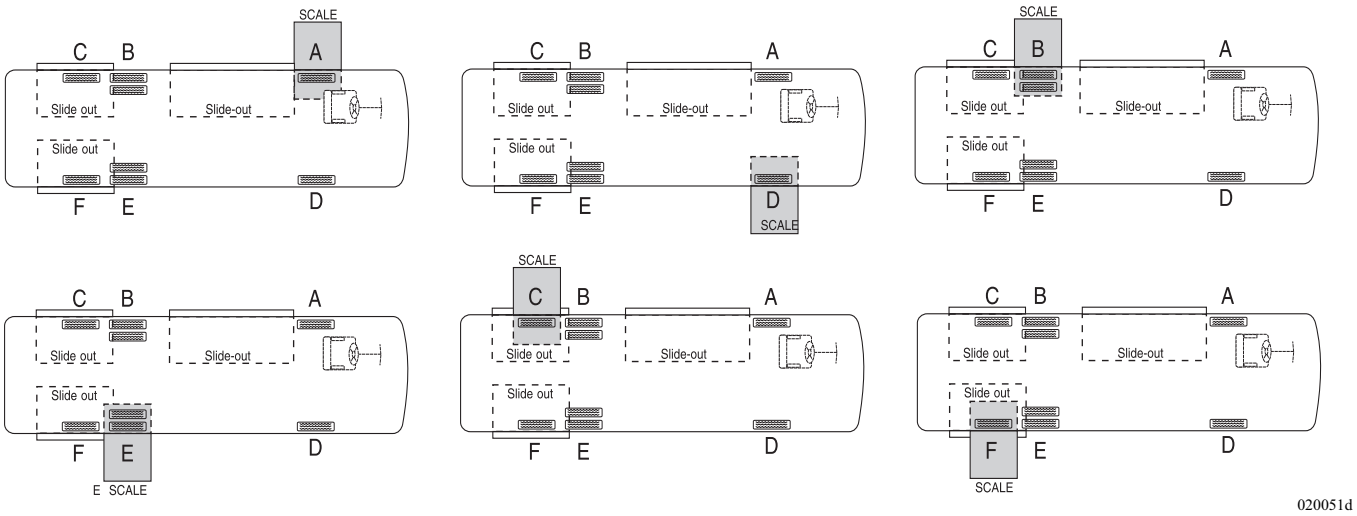


*Six Point Weighing Example Chart*

- Take the Tag axle Gross Axle Weight Rating (GAWR) and divide it by two. Example: Tag axle GAWR taken from the motorhome Vehicle Certification Label is 10,000 lbs. Using the Six-Point Weighing Example Chart, record 5,000 lbs. on Scale C and F, line 1.
- Weigh the driver side rear corner (Scale C) and record weight on chart Scale C, line 2. Example: 4,500 lbs.
- Weigh the passenger side rear corner (Scale F) and record weight on chart Scale F, line 2. Example: 4,000 lbs.
- Add chart Scale C and F, lines 1, for the **Gross Axle Weight Rating (GAWR)** and record on chart under Totals. Example: 10,000 lbs.
- Add chart Scale C and F, line 2 for actual **Gross Axle Weight (GAW)** and record on chart under Totals. Example: 8,500 lbs.
- Actual **Gross Axle Weight (GAW)**. Example: 8,500 lbs., is not to exceed **Gross Axle Weight Rating (GAWR)**. Example: 10,000 lbs.
- If necessary, adjust the tag axle regulator to compensate for the payload carried by the tag, drive and front axles.
- Perform the regulator stabilization procedure.

**NOTE: Any adjustments made to the Tag Axle Regulator will require repeating the weighing procedures.**

- If necessary, adjust the payload so the **GAWR** is not exceeded. Total combined weights must not exceed the **GVWR**.
- Refer to the Tire Chart (Example Tire size 295/80R22.5). Use the highest actual weight, Scale A or D, line 2. Example 5,000 lbs.; Scale B or E, line 2. Example 7,100 lbs.; Scale C or F, line 2. Example 4,500 lbs. Determine the proper tire pressure for each axle. Front axle tire pressure would be 115 psi, Rear axle tire pressure would be 85 psi, and Tag axle tires would be 80 psi using the Load Inflation chart.

**WARNING: Improperly inflated or overloaded tires can cause a blowout. An overloaded axle can cause a component failure of the suspension system. Tire blowout or broken suspension components can lead to loss of vehicle control resulting in property damage, personal injury or death.**

**CAUTION: If actual weight carried by any tire is below the tire chart weight specification minimum tire pressure the minimum inflation pressure must be maintained. Tire pressure below the minimum inflation pressure can overheat and damage the tire casing leading to premature tire failure or blowout.**

| | ROADSIDE | | CURBSIDE | | TOTAL AXLE WEIGHT | GROSS AXLE WEIGHT RATING GAWR | GAWR Minus Total Axle Weight |
|---|---|---|---|---|---|---|---|
| FRONT AXLE | 1. 6,500 | + | 6,500 | = | 13,000 | | |
| | 2.(A) 5,000 | | (D) 4,000 | | 9,000 | 13,000 | 4,000 |
| DRIVE AXLE | 1. 10,000 | + | 10,000 | = | 20,000 | | |
| | 2.(B) 7,100 | | (E) 6,900 | | + 14,000 | + 20,000 | 6,000 |
| TAG AXLE | 1. 5,000 | + | 5,000 | = | 10,000 | | |
| | 2.(C) 4,500 | | (F) 4,000 | | + 8,500 | + 10,000 | 1,500 |
| TAG AXLE REGULATOR | SETTING @ 24 psi | | Total Axle Weight | | = 31,500 UVW | = 43,000 GVWR | = 11,500 CCC |

**NOTE: These measurements are with a full fuel tank and nobody in the motorhome.**

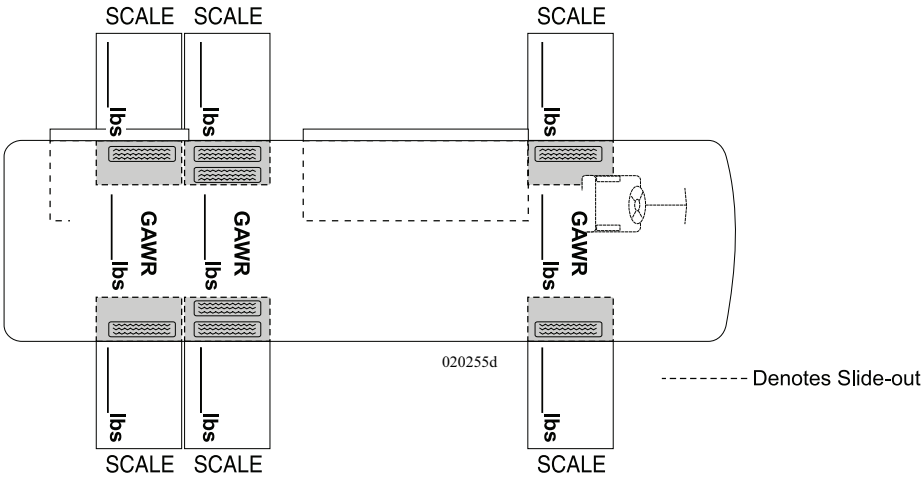


**Load and Inflation Tables:**

The load and inflation table helps to determine the correct inflation for the motorhome tire, after properly weighing the motorhome. All pressures are rated at a cold PSI. Cold conditions are defined as early in the morning before the day's ambient temperature, sun's radiant heat or the heat generated while driving have caused the tire pressure to temporarily increase. This means that the pressure should be checked early and when the motorhome has not been driven more than one mile. The check interval should be in the morning, before the "drive" trip and every morning on extended trips. A quality truck tire gauge with a multiple angle airhead is needed to ensure access to both dual wheel positions of the drive axle. Ensure the valve cap is replaced on the stem after the inflation is checked. This guarantees the valve core will remain free of dirt and foreign material. Material lodged between the valve core and internal stem can cause slow leaks resulting in tire failure.

**Understanding the Inflation Table:**

Tire Size is on the left margin of the Table.

Determine the "Single" inflation reading or "Dual" inflation reading. This is denoted with a "D" or "S" on the Table. Single is for the Front axle and Tag axle (if equipped). Dual is for the Drive axle.

Find the corresponding PSI at the top columns to see the corresponding maximum weight capacity for that PSI.

**NOTE: Every load range has a maximum rating as well as a minimum rating. Do not exceed those ratings.**

Rated load capacities are listed for individual tires in a Dual or Single position.

| TIRE SIZE | MAX Speed Rating (MPH) | Dual (D) Single (S) | INFLATION PRESSURE PSI | | | | | | | | | | | | |
|---|---|---|---|---|---|---|---|---|---|---|---|---|---|---|---|
| | | | 65 | 70 | 75 | 80 | 85 | 90 | 95 | 100 | 105 | 110 | 115 | 120 | 125 |
| 8R19.5 | 75 | D | 2350 | 2460 | 2570 | 2680 | 2780 | 2880 | 2980 | 3070 | 3160 | **3375(F)** | | | |
| | | S | 2410 | 2540 | 2680 | 2800 | 2930 | 3060 | 3170 | 3280 | 3400 | **3500(F)** | | | |
| 225/70R19.5 | 75 | D | | 2720 | 2860 | 3000 | 3115 | 3245 | **3415(F)** | | | | | | |
| | | S | | 2895 | 3040 | 3195 | 3315 | 3450 | **3640(F)** | | | | | | |
| 245/70R19.5 | 75 | D | | 3415 | 3515 | 3655 | **3875(F)** | 3940 | 4075 | **4375(G)** | | | | | |
| | | S | | 3640 | 3740 | 3890 | **4080(F)** | 4190 | 4335 | **4545(G)** | | | | | |
| 265/70R19.5 | 75 | D | | | | 3750 | 3930 | 4095 | 4300 | 4405 | 4560 | 4805 | 4860 | **5070(G)** | |
| | | S | | | | 3970 | 4180 | 4355 | 4540 | 4685 | 4850 | 5070 | 5170 | **5355(G)** | |
| 9R22.5 | 65 | D | 3120 | 3270 | 3410 | 3550 | 3690 | 3820 | **3950(F)** | | | | | | |
| | | S | 3190 | 3370 | 3560 | 3730 | 3890 | 4050 | 4210 | 4350 | **4500(F)** | | | | |
| 10R22.5 | 65 | D | 3690 | 3870 | 4040 | 4200 | 4375 | 4520 | 4670 | **4875(F)** | 4970 | 5110 | **5250(G)** | | |
| | | S | 3770 | 4000 | 4210 | 4410 | 4610 | 4790 | 4970 | **5150(F)** | 5320 | 5490 | **5680(G)** | | |
| 11R22.5 | 75 | D | | | | 4760 | 4950 | 5120 | 5300 | 5470 | **5750(G)** | **5800(H)** | | | |
| | | S | | | | 4990 | 5220 | 5430 | 5640 | 5840 | **6175(G)** | 6240 | 6430 | **6610(H)** | |
| 12R22.5 | 65 | D | | | | 5190 | 5390 | 5590 | 5780 | 5960 | 6150 | 6320 | 6500 | **6750(H)** | |
| | | S | | | | 5450 | 5690 | 5920 | 6140 | 6370 | 6590 | 6790 | 7010 | **7390(H)** | |
| 245/75R22.5 | 75 | D | | 3260 | 3425 | 3640 | 3740 | 3890 | 4080 | 4190 | 4335 | **4410(G)** | | | |
| | | S | | 3470 | 3645 | 3860 | 3980 | 4140 | 4300 | 4455 | 4610 | **4675(G)** | | | |
| 255/70R22.5 | 75 | D | | 3585 | 3765 | 3970 | 4110 | 4275 | 4410 | 4455 | 4610 | 4675 | **5070(H)** | | |
| | | S | | 3815 | 4005 | 4190 | 4370 | 4550 | 4675 | 4895 | 5065 | 5205 | **5510(H)** | | |
| 265/75R22.5 | 75 | D | | | 4040 | 4205 | 4370 | 4525 | 4685 | **4805(G)** | | | | | |
| | | S | | | 4070 | 4255 | 4440 | 4620 | 4800 | 4975 | 5150 | **5205(G)** | | | |
| 275/70R22.5 | 75 | D | | | | | 4535 | 4750 | 4960 | 5165 | 5370 | 5575 | 5775 | 5975 | **6175(H)** |
| | | S | | | | | 4885 | 5080 | 5305 | 5530 | 5750 | 5965 | 6185 | 6400 | **6610(H)** |
| 275/80R22.5 | 75 | D | | | | | 4855 | 5080 | 5305 | 5525 | 5745 | 5965 | 6180 | **6395(H)** | |
| | | S | | | | | 5265 | 5515 | 5755 | 6000 | 6235 | 6475 | 6710 | **6940(H)** | |
| 295/75R22.5 | 75 | D | | | 4690 | 4885 | 5070 | 5260 | 5440 | **5675(G)** | 5800 | **6005(H)** | | | |
| | | S | | | 4725 | 4945 | 5155 | 5370 | 5510 | 5780 | 5980 | **6175(G)** | 6370 | **6610(H)** | |
| 295/80R22.5 | 75 | D | | | | 4855 | 5100 | 5335 | 5570 | 5805 | 6035 | 6265 | 6490 | 6720 | **6940(H)** |
| | | S | | | | 5480 | 5750 | 6020 | 6285 | 6550 | 6810 | 7070 | 7320 | 7580 | **7830(H)** |
| 315/80R22.5 | 75 | D | | | | | 5840 | 6070 | 6395 | 6540 | 6770 | 6940 | 7210 | **7610(J)** | 7390 |
| | | S | | | | | 6415 | 6670 | 6940 | 7190 | 7440 | 7610 | 7920 | **8270(J)** | 8820 |
| 285/75R24.5 | 75 | D | | | 4740 | 4930 | 5205 | 5310 | 5495 | **5675(G)** | | | | | |
| | | S | | | 4770 | 4990 | 5210 | 5420 | 5675 | 5835 | 6040 | **6175(G)** | | | |

EXAMPLE

**Cargo Carrying Capacity:**

When weighing the motorhome it is important to understand that each motorhome, even of the same model year, floorplan and length will weigh different due to options and accessories. **The Gross Vehicle Weight Rating (GVWR), Gross Combination Weight Rating (GCWR) and/or Gross Axle Weight Rating (GAWR) must not be exceeded.**

**GVWR** of the vehicle limits the weight of the entire load combination, regardless of the mix of water, LP-Gas, passengers and cargo.

It is important to understand that the weighing process is performed in two phases. First, by determining the **Cargo Carrying Capacity (CCC)**; and second, to ensure the **GVWR** is not exceeded when adjusting tire pressures. The weighing process should start by recording the **GVWR** from the Federal Weight Label, then weighing the motorhome unloaded, without passengers and with a full fuel tank. Engine and transmission fluid levels must be full. This is known as the **Unloaded Vehicle Weight (UVW)**. Once this weight has been recorded it can be subtracted from the **GVWR**.

| | | | | | | |
|---|---|---|---|---|---|---|
| GVWR | 35,000 | - UVW | 20,000 | = | A | 15,000 |

Next, begin to calculate the **Cargo Carrying Capacity (CCC)**.

Fresh water weight and LP-Gas weight can now be subtracted from the remaining total line A.

- Water weight is the number of gallons multiplied by 8.3.
- LP-Gas weight is the number of gallons multiplied by 4.2.

A 10-gallon water heater with a 40-gallon fresh tank would total 50 gallons times 8.3, or 415 pounds.

A 30-gallon LP-Gas tank will have 24 gallons of LP-Gas due to the 80% valve. This would mean 24 gallons multiplied by 4.2, or 100.8 pounds.

| | | | | | | |
|---|---|---|---|---|---|---|
| A | 15,000 | - 415 | = | B | 14,585 |
| B | 14,585 | - 100.8 | = | C | 14,484.2 |

Next, calculate the **Sleep Capacity Weight Rating (SCWR)** the manufacturer's designated number of sleeping positions for the motorhome multiplied by 154 pounds.

The 154 pounds (70kg) is the average weight established by the US Federal Government and Transport Canada, and is used to arrive at **Cargo Carrying Capacity (CCC)**. However, actual sleep capacity weight may be greater. The SCWR is not intended to limit the sleeping capacity to a specified weight.

***Example:*** If the manufacturer has designated the motorhome sleeping position at 4 (616 pounds) and there are four people who weight 200, 200, 178 and 138 pounds, totaling 716 pounds, that doesn't mean the sleeping capacity is reduced to three individuals, but rather the **CCC** is reduced by 100 pounds due to the actual passenger weight.

| | | | | | | |
|---|---|---|---|---|---|---|
| C | 14,484.2 | - SCWR | 716 | = | CCC | 13,768.2 |

**Cargo Carrying Capacity (CCC)** is how much cargo the motorhome can carry. However, tongue weight of a towed vehicle will further reduce this amount.

Now the motorhome can be fully loaded and weighed to ensure **GVWR** is not exceeded. Once the motorhome is fully loaded it is ready to be weighed to obtain an accurate scale reading and determine the proper tire pressure. All slide rooms must be in the retracted position. The motorhome must remain as level as possible on the scale, even though an axle or side is not physically on the scale.

- Each wheel position must be weighed to accurately determine the weight carried at each wheel position.
- Refer to the previous examples on how to weigh each wheel position. Each wheel position weight must be weighed and recorded to determine proper tire inflation.
- Wheel position weights are not to exceed **Gross Axle Weight Rating (GAWR)** and **Gross Vehicle Weight Rating (GVWR)** as printed on the Motorhome Vehicle Certification Label.
- Compare wheel position weights with weigh ratings on the label. Do not operate if wheel position weights exceed maximum specifications. Items will need to be removed until rating weight is within specification.

**WARNING: Most states and Canadian provinces require any trailer or vehicle being towed have adequate auxiliary brakes. Failure to comply with these State and Canadian province requirements may result in fines and/or pose a safety hazard, which may result in an accident. Further instructions for towing guidelines, including auxiliary brake requirements for any towed trailer or towed vehicle, are found in other areas of this manual.**

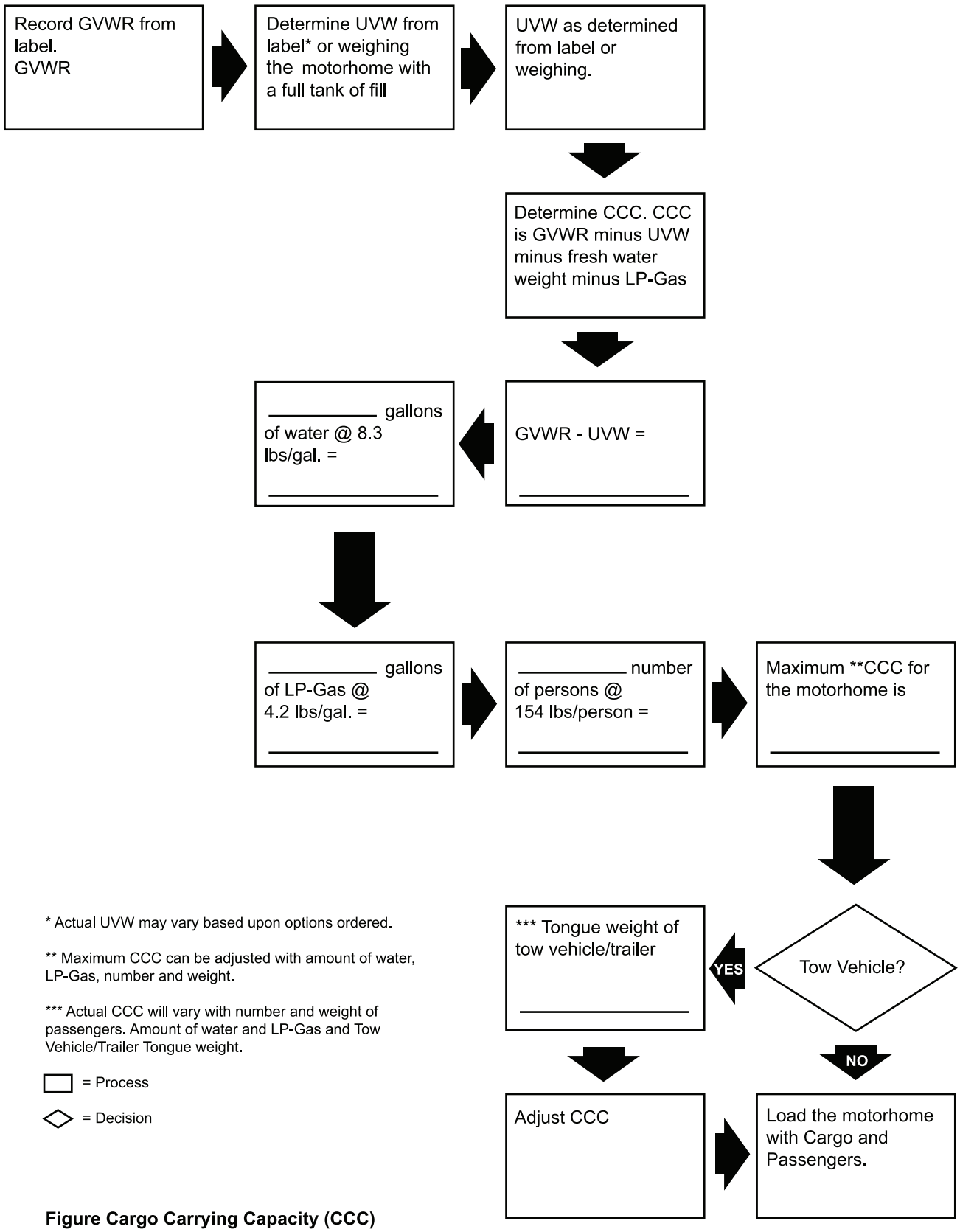


* Actual UVW may vary based upon options ordered.

** Maximum CCC can be adjusted with amount of water, LP-Gas, number and weight.

*** Actual CCC will vary with number and weight of passengers. Amount of water and LP-Gas and Tow Vehicle/Trailer Tongue weight.

☐ = Process

◇ = Decision

**Figure Cargo Carrying Capacity (CCC)**

020254

| | ROADSIDE | | CURBSIDE | | TOTAL AXLE WEIGHT | GROSS AXLE WEIGHT RATING GAWR | GAWR Minus Total Axle Weight |
|---|---|---|---|---|---|---|---|
| FRONT AXLE | 1. 6,500 | + | 6,500 | = | 13,000 | | |
| | 2.(A) 5,000 | | (D) 4,000 | | 9,000 | 13,000 | 4,000 |
| DRIVE AXLE | 1. 10,000 | + | 10,000 | = | 20,000 | | |
| | 2.(B) 7,100 | | (E) 6,900 | | + 14,000 | + 20,000 | 6,000 |
| TAG AXLE | 1. 5,000 | + | 5,000 | = | 10,000 | | |
| | 2.(C) 4,500 | | (F) 4,000 | | + 8,500 | + 10,000 | 1,500 |
| TAG AXLE REGULATOR | SETTING @ 24 psi | | Total Axle Weight | | = 31,500 UVW | = 43,000 GVWR | = 11,500 CCC |

**NOTE: These measurements are with a full fuel tank and nobody in the motorhome.**

| | FORMULA | UVW 31,500 CAPACITY | | CCC 11,500 |
|---|---|---|---|---|
| FRESH WATER | Subtract Gallon @ 8.3 lbs/gal | 100 X 8.3 = 830 | - | 10,670 |
| WATER HEATER | Subtract Gallon @ 8.3 lbs/gal | 10 X 8.3 = 83 | - | 10,587 |
| LP-GAS | Subtract Gallon @ 4.2 lbs/gal | 40 X 4.2 = 168 | - | 10,419 |
| SLEEP CARRYING WEIGHT RATING | Subtract Persons @ 154 lbs/person | 5 X 154 = 770 | - | 9,649 |
| | | Maximum Cargo Carrying Capacity CCC | | 9,649 |

Maximum Cargo Carrying Capacity will change by varying any of the capacities. Tongue Weight of a towed vehicle will reduce the Cargo Carrying Capacity (CCC).

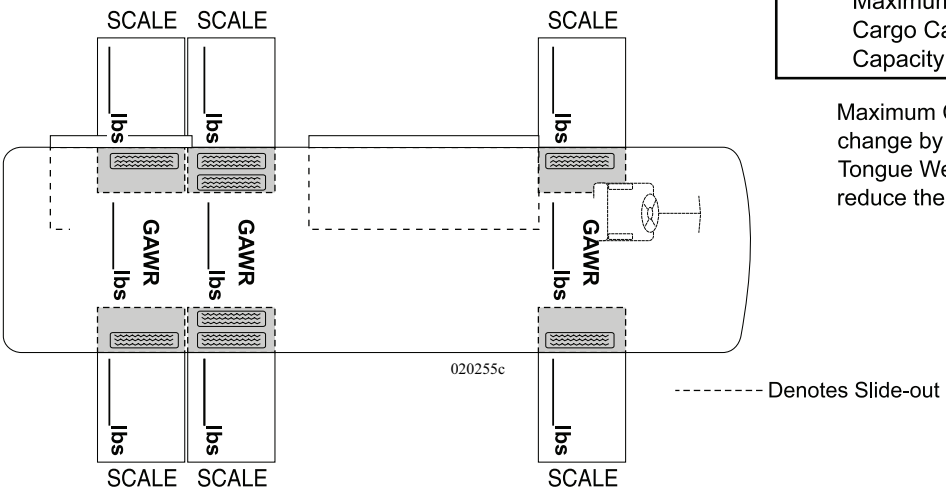

| | ROADSIDE | | CURBSIDE | | TOTAL AXLE WEIGHT | GROSS AXLE WEIGHT RATING GAWR | GAWR Minus Total Axle Weight |
|---|---|---|---|---|---|---|---|
| FRONT AXLE | 1.<br>2.(A) | + | (D) | = | | | |
| DRIVE AXLE | 1.<br>2.(B) | + | (E) | = | + | + | |
| TAG AXLE | 1.<br>2.(C) | + | (F) | = | + | + | |
| TAG AXLE REGULATOR | SETTING @_____ psi | | Total Axle Weight | | = UVW | = GVWR | = CCC |

**NOTE: These measurements are with a full fuel tank and nobody in the motorhome.**

| | FORMULA | UVW CAPACITY | | CCC |
|---|---|---|---|---|
| FRESH WATER | Subtract Gallon @ 8.3 lbs/gal | X 8.3 = | - | |
| WATER HEATER | Subtract Gallon @ 8.3 lbs/gal | X 8.3 = | - | |
| LP-GAS | Subtract Gallon @ 4.2 lbs/gal | X 4.2 = | - | |
| SLEEP CARRYING WEIGHT RATING | Subtract Persons @ 154 lbs/person | X 154 = | - | |
| | | Maximum Cargo Carrying Capacity CCC | | |

Maximum Cargo Carrying Capacity will change by varying any of the capacities. Tongue Weight of a towed vehicle will reduce the Cargo Carrying Capacity (CCC).

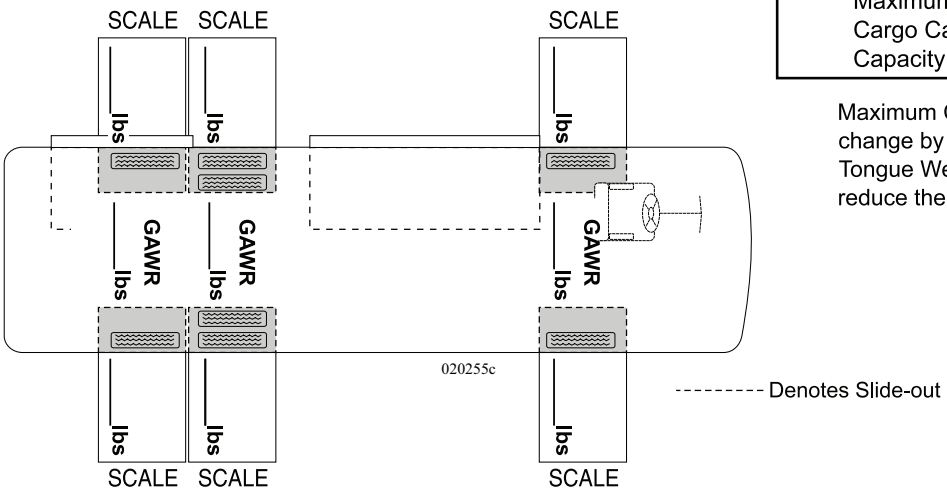

**WEIGHT RECORD SHEET:**

DATE:_____
PLACE:_____
FRONT: _____
DRIVE: _____
TAG: (LEFT)_____ (RIGHT)_____
TOTAL:_____
TOTAL WEIGHT: _____

DATE:_____
PLACE:_____
FRONT: _____
DRIVE: _____
TAG: (LEFT)_____ (RIGHT)_____
TOTAL:_____
TOTAL WEIGHT: _____

DATE:_____
PLACE:_____
FRONT: _____
DRIVE: _____
TAG: (LEFT)_____ (RIGHT)_____
TOTAL:_____
TOTAL WEIGHT: _____

DATE:_____
PLACE:_____
FRONT: _____
DRIVE: _____
TAG: (LEFT)_____ (RIGHT)_____
TOTAL:_____
TOTAL WEIGHT: _____

DATE:_____
PLACE:_____
FRONT: _____
DRIVE: _____
TAG: (LEFT)_____ (RIGHT)_____
TOTAL:_____
TOTAL WEIGHT: _____

DATE:_____
PLACE:_____
FRONT: _____
DRIVE: _____
TAG: (LEFT)_____ (RIGHT)_____
TOTAL:_____
TOTAL WEIGHT: _____

DATE:_____
PLACE:_____
FRONT: _____
DRIVE: _____
TAG: (LEFT)_____ (RIGHT)_____
TOTAL:_____
TOTAL WEIGHT: _____

DATE:_____
PLACE:_____
FRONT: _____
DRIVE: _____
TAG: (LEFT)_____ (RIGHT)_____
TOTAL:_____
TOTAL WEIGHT: _____

DATE:_____
PLACE:_____
FRONT: _____
DRIVE: _____
TAG: (LEFT)_____ (RIGHT)_____
TOTAL:_____
TOTAL WEIGHT: _____

DATE:_____
PLACE:_____
FRONT: _____
DRIVE: _____
TAG: (LEFT)_____ (RIGHT)_____
TOTAL:_____
TOTAL WEIGHT: _____

DATE:_____
PLACE:_____
FRONT: _____
DRIVE: _____
TAG: (LEFT)_____ (RIGHT)_____
TOTAL:_____
TOTAL WEIGHT: _____

## VIEWS - *Front*

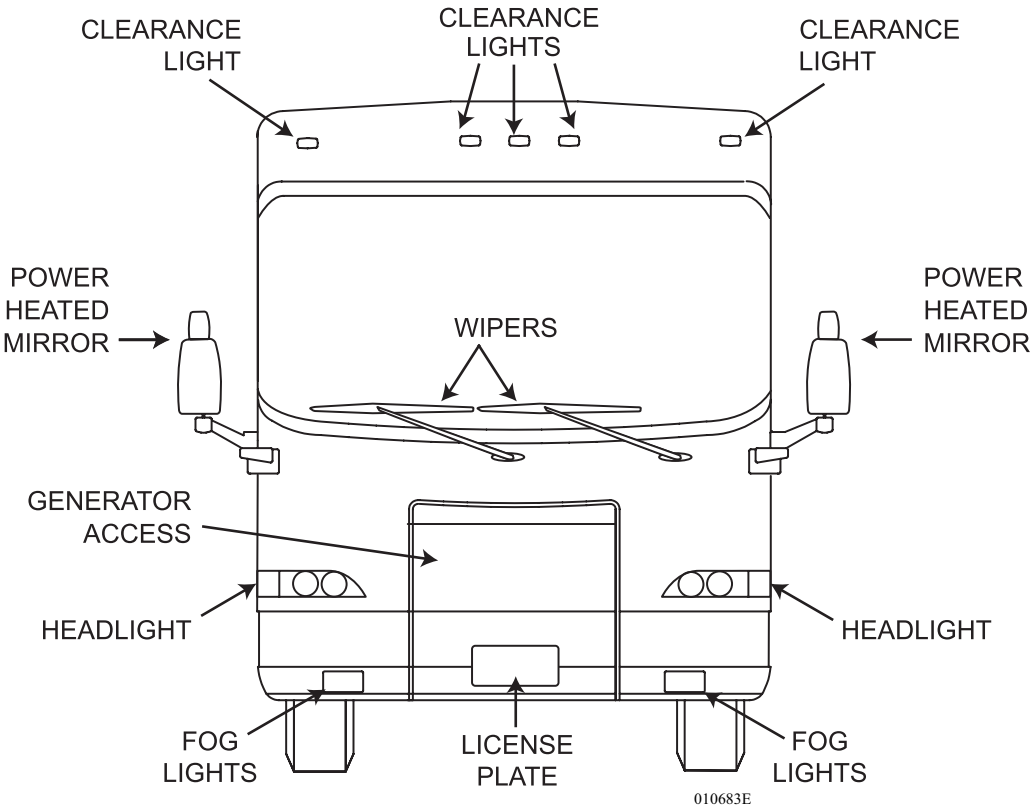


## *Rear*

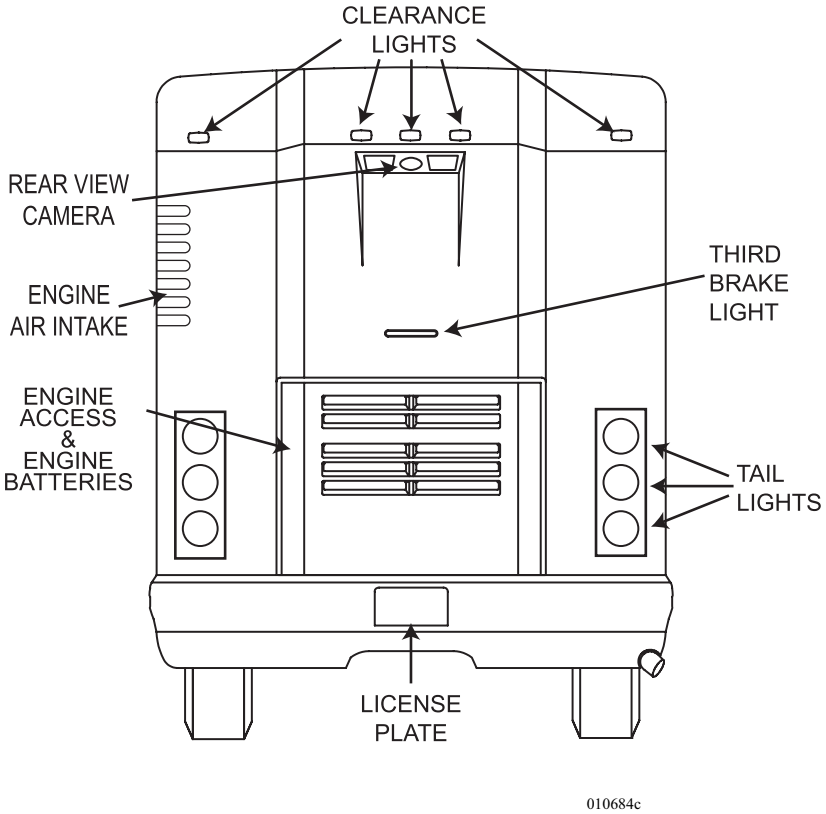

## Roadside

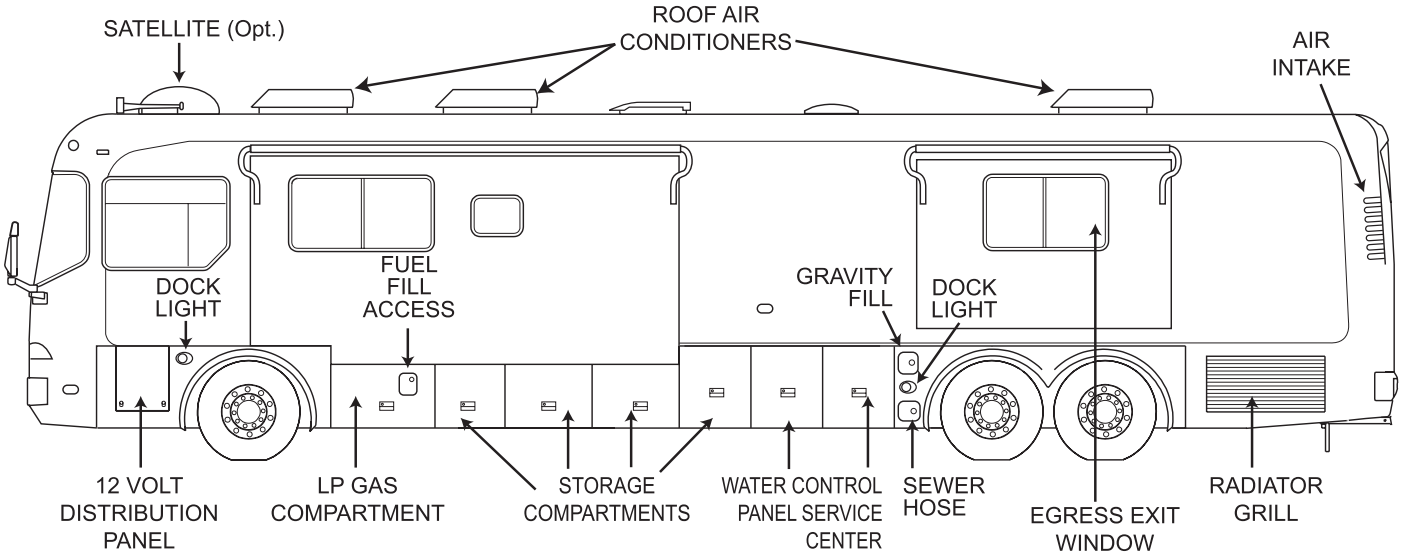


010682C

## Curbside

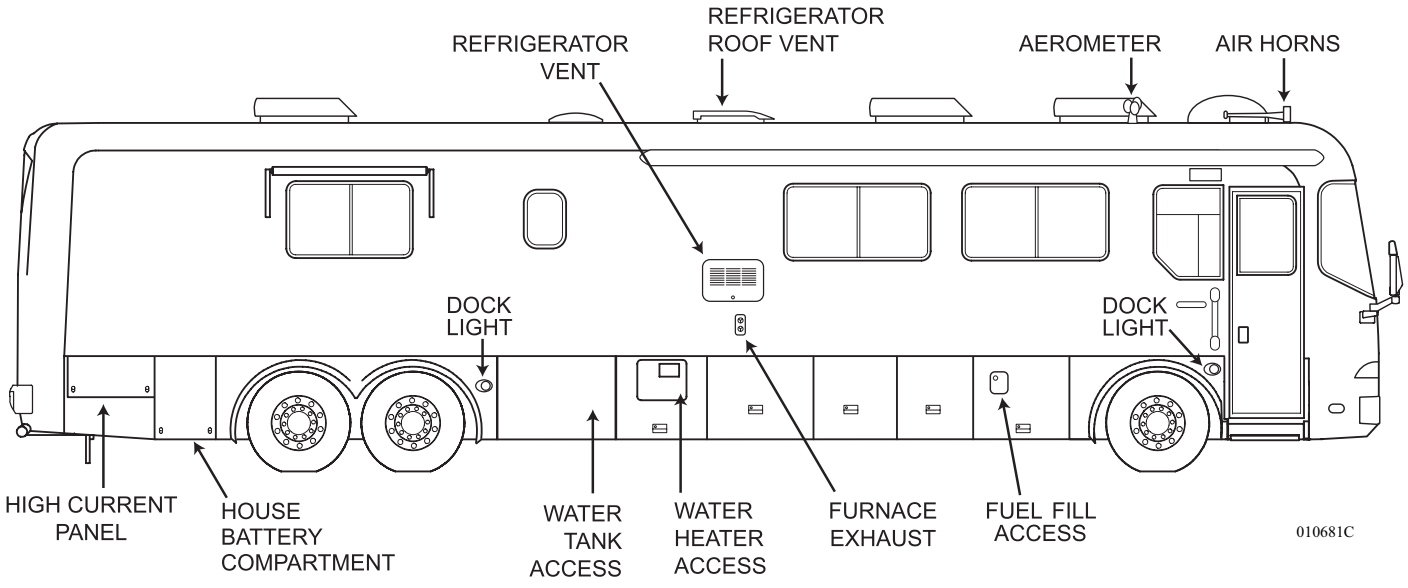


010681C

## SPECIFICATIONS - DIMENSIONS CHART

| 2004 Navigator Specifications | 38PST | 40PBD | 40PBDD | 40PBT | 42SBW | 43PKD | 43PBQ | 45DCDS | 45PBDD | 45PBT |
|---|---|---|---|---|---|---|---|---|---|---|
| **Weights** | | | | | | | | | | |
| Gross Vehicle Weight Rating | 47,600 | 47,600 | 47,600 | 47,600 | 47,600 | 47,600 | 47,600 | 47,600 | 47,600 | 47,600 |
| Gross Combined Vehicle Weight Rating | 57,600 | 57,600 | 57,600 | 57,600 | 57,600 | 57,600 | 57,600 | 57,600 | 57,600 | 57,600 |
| Front Gross Axle Weight Rating | 14,600 | 14,600 | 14,600 | 14,600 | 14,600 | 14,600 | 14,600 | 14,600 | 14,600 | 14,600 |
| Rear Gross Axle Weight Rating | 23,000 | 23,000 | 23,000 | 23,000 | 23,000 | 23,000 | 23,000 | 23,000 | 23,000 | 23,000 |
| Tag Axle Weight Rating (lbs.) | 10,000 | 10,000 | 10,000 | 10,000 | 10,000 | 10,000 | 10,000 | 10,000 | 10,000 | 10,000 |
| **Measurements** | | | | | | | | | | |
| Wheelbase **(Shorten wheel base 18" on 45' units)** | 236.5" | 245" | 245" | 245" | 269.5" | 281.5" | 281.5" | **283.5"** | **283.5"** | **283.5"** |
| Overall Length | 38'-10" | 40' 10" | 40' 10" | 40' 10" | 42' 4" | 43' 4" | 43' 4" | 45' | 45' | 45' |
| Overall Height (with A/C) | 12' | 12' | 12' | 12' | 12' | 12' | 12' | 12' | 12' | 12' |
| Interior Height | 79" | 79" | 79" | 79" | 79" | 79" | 79" | 79" | 79" | 79" |
| Interior Width | 96" | 96" | 96" | 96" | 96" | 96" | 96" | 96" | 96" | 96" |
| Exterior Width | 100.5" | 100.5" | 100.5" | 100.5" | 100.5" | 100.5" | 100.5" | 100.5" | 100.5" | 100.5" |
| **Tank Capacity** | | | | | | | | | | |
| Water Heater (gal) | 10 | 10 | 10 | 10 | 10 | 10 | 10 | 10 | 10 | 10 |
| Gray Tank (gal) | 60 | 60 | 60 | 60 | 60 | 60 | 60 | 60 | 60 | 60 |
| Black Tank (gal) | 40 | 40 | 40 | 40 | 40 | 40 | 40 | 40 | 40 | 40 |
| Fresh Tank (gal) | 100 | 100 | 100 | 100 | 100 | 100 | 100 | 100 | 100 | 100 |
| Fuel Tank (gal) | 150 | 150 | 150 | 150 | 150 | 150 | 150 | 150 | 150 | 150 |
| **LP Tank (gal)*** | 38 | 38 | 38 | 38 | 38 | 38 | 38 | 38 | 38 | 38 |

*** Actual filled LP capacity is 80% of listing due to safety shut off required on tank.**

**NOTE: This chart reflects product specifications available at the time of printing. Therefore any floor plans introduced thereafter may not be reflected in the chart. All other information contained throughout the manual will still apply.**

## SMOKE DETECTOR

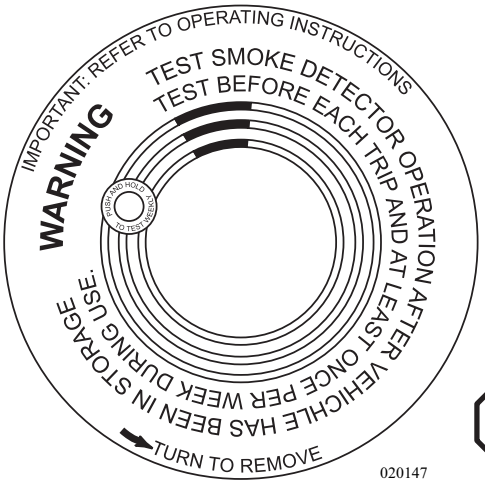


Statistics show that most fire casualties are not caused by direct flame, but by less visible smoke (products of combustion). The smoke detector responds to both visible and invisible products of combustion. The smoke detector will automatically return from alarm to normal state when the reason for activation, the presence of smoke, is completely removed. Fires are commonly caused by smoking in bed, leaving children unattended or using flammable cleaning fluids. Please be safety conscious and avoid unnecessary risk.

**WARNING: There is no way to insure there will be no injury or loss of life in a fire; however, the smoke detector is intended to help reduce the risk of tragedy. Additional smoke detectors may help to reduce the risk. Proper use and care of the smoke detector could save lives.**

## Operation

When a 9 Volt DC battery is correctly connected, the smoke alarm is operating. The LED will flash every minute showing the battery is supplying power. A load alarm will sound when a production of combustion is sensed.

**NOTE: The unit will not operate without a battery. A battery flag will pop up preventing the unit from being installed to the mounting bracket without a battery. Carbon zinc batteries average a service life of one year. Alkaline batteries average a service life of one to two years.**



## Testing

Simply press the test button on the smoke alarm cover for approximately three seconds. The alarm will sound if all electronic circuitry, horn and battery are working properly. The smoke alarm should be tested at least once a week when the motorhome is in use, prior to each trip and when the motorhome has been in storage. When testing the smoke alarm it is advised to stand at arms length.

**CAUTION: Never use an open flame to test the smoke alarm. You may ignite and set fire to the alarm and to the motorhome.**

## Maintenance

A smoke alarm is designed to be as maintenance free as possible. However, there are some simple steps to perform in order to keep the smoke alarm working properly:

- Test the smoke alarm once a week.
- Keep a supply of 9 Volt DC batteries on hand.
- Vacuum the slots in the cover and sides with a soft brush attachment every month. Test the smoke alarm once the unit has been vacuumed.
- The smoke alarm should be cleaned every six months to help keep the unit working efficiently.
- The smoke alarm will beep once a minute when a low battery condition exists. The battery must be replaced immediately.

## Troubleshooting

If the alarm does not sound when the test button is pushed, or with a smoke test, try the following:

- Inspect for obvious damage.
- Check for the recommended battery type.
- Check the battery for proper connection or replace the battery if needed.
- Gently vacuum as recommended.

If these procedures do not correct the problem, do not attempt repairs. If the smoke alarm is within the warranty period and the terms indicate the nature of the problem, return the unit to your dealer. Smoke detectors beyond the warranty period cannot be economically repaired.

## LP-GAS DETECTOR

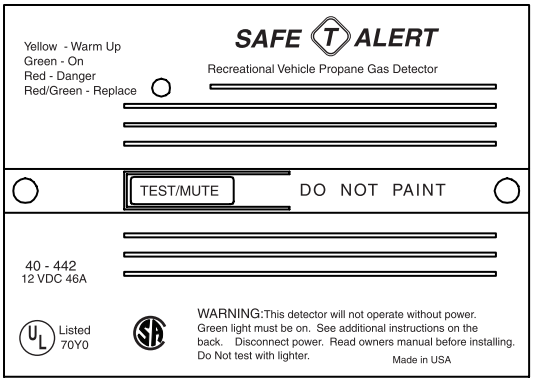


020043

The LP-Gas detector is required safety equipment in RVs. American National Standards Institute (ANSI) A119.2 - Fire & Life Safety 3-4.8 LP Gas Detectors states *" An LP Gas detector must be installed in any RV that contains an LP Gas appliance and an electrical system. The LP Gas detector must be listed as suitable for use in recreational vehicles under the requirement of UL 1484 Residential Gas Detectors, and be installed according to the terms of its listing."*

It detects both LP-Gas and methane gas. Liquefied Petroleum (LP) Gas is heavier than air; methane gas is lighter than air. LP-Gas will settle to the lowest point, generally the floor of the motorhome. Methane gas will rise. The gas detector is also sensitive to other fumes such as hair spray, of which most contain butane as the propellant. Butane, like propane, is heavier than air and will settle to the floor level where it will be detected. When this occurs, reset the detector to stop the alert sound.

**About the LP-Gas Detector:**

It is important to be aware of the difference between a gas leak versus gas escaping from an unlit, open burner. Pure propane vapors from a leaking pipe or gas fitting are heavier than air and will build up their heaviest concentration at the leak and float down until they mix with air. Gas from open burners is intentionally mixed with air to induce burning and will dissipate into the air. When mixed with air, the gas becomes only marginally heavier than air and will expand outward. If a gas burner is left on, the area around the burner, range, and adjoining counter space will be combustible and can cause injury and damage if ignited. This condition will exist for an extended time period and eventually the gas will reach the detector's location and be detected.

**NOTE: The LP detector only indicates the presence of propane gas at its sensor. Combustible levels of propane gas may be present in other areas. This detector is intended for the detection of propane gas ONLY.**

It has not been tested to detect any other gas. However, other volatile gases (nuisance gases), most of them flammable in various concentrations, may cause the detector to alarm. Some products that may cause the detector to alarm are alcohol, liquor, kerosene, gasoline, deodorants, colognes, propellants used in spray cans and cleaning solvents. In some cases vapors from the glues and adhesives used in the manufacturing of the motorhome may also cause the detector to alarm for several months after the date of manufacture. If it is determined that the detector has false alarmed because of the above mentioned nuisance gases, reset the detector and air out the vehicle with fresh outside air.

Take precautions to be sure one of these nuisances has not masked an actual gas alarm condition. The detector draws less current than one instrument panel lamp. The detector will operate to detect gas until the battery is drained down to 7.0 Volts. The detector must be supplied with a voltage higher than 7.0 Volts, for it to operate properly. If the power source is disconnected, or if the power is otherwise interrupted, the detector will not operate.

The LP-Gas leak detector has a self-check circuit which runs at all times while the detector is powered. In the event that the circuitry fails, a failure alarm will sound and the operating indicator will cease to light.



**LP-Gas Detector Operation:**

Upon first application of power the LED will flash yellow for three minutes while the detector is stabilizing. At the end of the start cycle the LED will turn Green, indicating full operation. If the detector senses unsafe levels of gas it will immediately sound an alarm. The gas detector operates on 12 Volt DC, with a current draw less than 1/10th of one amp.

**CAUTION: The detector will not alarm during the three minute warm up cycle.**

### *Testing*

Press the **TEST** switch any time during the warm up cycle or while in normal operation. The LED should flash red and the alarm should sound. Release the switch. This is the only way the detector should be tested. The test feature checks full operation of the detector.

**WARNING: Test the operation of this detector after the motorhome has been in storage, before each trip and at least once per week during use.**

### *Alarm*

The **red** LED will flash and the alarm will sound whenever a dangerous level of propane or methane gas is detected. The detector will continue to alarm until the gas clears or the **Test/Mute** switch is pressed.

**Procedures to Take During an Alarm:**

1. Turn off all gas appliances, (stove, heaters, furnace), extinguish all flames and smoking material. Evacuate, leave doors and windows open.
2. Turn off the primary LP tank valve.
3. Have a qualified professional determine and repair the source of the leak.

**CAUTION: Do Not re-enter until the problem is corrected.**

**Potential Sources of LP Gas Leaks When Operating the Motorhome:**

- Cooktop Burners
- Oven
- Furnace
- Refrigerator
- Water Heater
- Defective Regulator
- Defective LP-Gas Connection
- Portable Propane Powered Equipment

**Alarm Mute:**

Press the **Test-Mute** button when the detector is in alarm.

1. The **red** LED will continue flash and the alarm will beep every 30 seconds until the gas level has dropped to a safe level.
2. The LED will flash **green** until the end of the **Mute** cycle.
3. If dangerous gas levels return before the end of the **Mute** cycle, the alarm will beep four times and return to phase 1.
4. After two minutes the detector will return to normal operation (solid **green**) or resound the alarm if dangerous levels of gas remain in the area.

**Fault Alarm:**

Should the microprocessor sense a fault in the gas detector, a fault alarm will sound twice every 15 seconds. The LED will alternately flash **red to green** and the **MUTE** switch will not respond to any command. The gas detector must be repaired or replaced.

## *Maintenance*

1. Vacuum the dust off the detector cover weekly (more frequently in dusty locations) using the soft brush attachment of the vacuum.
2. Do not spray cleaning agents or waxes directly onto the front panel. This action may damage the sensor, cause an alarm or cause a detector malfunction.

## CARBON MONOXIDE DETECTOR

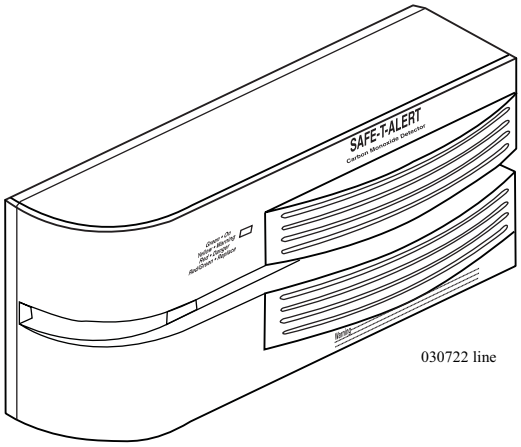


American National Standards Institute **(ANSI) A119.2 -** Fire & Life Safety 3-4.6 Carbon Monoxide Detectors states *" All RVs equipped with an internal combustion engine or designed with features to accommodate future installation of an internal combustion engine and truck campers shall be equipped with a listed CO detector installed in accordance with its listing."*

The motorhome is equipped with such a Carbon Monoxide detector. Everyone is at risk with Carbon Monoxide poisoning. Carbon Monoxide (CO) is a colorless, odorless and tasteless gas that binds with hemoglobin reducing the body's ability to absorb and carry oxygen to vital organs. Even low levels of CO have been known to cause brain and other vital organ damage in unborn infants, with no effect on the mother.

When removed from exposure, the symptoms dissipate as Carbon Monoxide is expelled through the lungs. Level of contamination in the body reduces at half-life increments at approximately four-hour intervals. Treatment with Oxygen will quicken recovery time.

In cases of mild exposure, the symptoms may include: a slight headache, nausea, vomiting and fatigue. Some consider this a "Flu-like Symptom." Symptoms for medium exposure may include a severe throbbing headache, drowsiness, confusion and fast heart rate. Extreme exposure can result in unconsciousness, convulsions, cardio-respiratory failure and death. Young children and household pets may be the first affected. Other highly sensitive people would include the elderly and people with lung or heart disease or anemia.

The CO detector is designed to detect the toxic CO Gas resulting from incomplete combustion of any fuel. This can be gasoline, propane, natural gas, oil, charcoal or wood. Anything that burns fuel such as engines, generators, furnaces, gas stoves or water heaters, produce CO gas. Consequently, it is uncommon for household smoke from cigarettes or normal cooking to cause the alarm to sound.

**CAUTION: Activation of this device indicates the presence of carbon monoxide (CO), which can be fatal. A concentration of above 100 PPM will cause a warning condition. Individuals with medical problems may consider using detection devices with lower carbon monoxide alarming capabilities. Prolonged exposure to the horn at a close distance may be harmful to hearing.**

The CO detector is wired to both the house and chassis batteries, this allows a reliable and continuous protection by alerting the build up of potentially dangerous levels of CO. Once the unit is powered, it will run through a brief warm-up and self check prior to monitoring for CO gas. There are no switches that can accidentally be turned off. There is a simple test procedure that should be performed to ensure the CO detector is functioning properly.

**WARNING: If there is constant beeping and the red light is flashing, CO gas has been detected. Shut off appliances, coach engine, and water heater. Evacuate the coach and call the fire department. Have any problems corrected before restarting any appliances or the coach.**

## Operation

The detector is equipped with a self-cleaning CO sensor and requires a ten minute initial warm-up period to clean the sensor element and achieve stabilization. During the warm-up period, the **green** power light will flash **ON** and **OFF**. The **green** power light should be lit when the power is on. If the light is not lit, turn off the power and check all wire connections. If the power is on and the connections are correct, but the indicator still does not light, the detector should be returned for service. **Do not attempt to fix the detector.**

The indicator light displays a specific color to monitor along with a matching sound pattern:

**Indicator Lights and Sound Patterns:**

- **ON** or normal condition is indicated by **green**. The CO detector has power and is sensing air for the presence of CO gas. The alarm horn will not sound.
- Flashing **red** indicates low CO alarm condition along with **four** beeps then **OFF** for 5 seconds. The alarm horn will sound and can be reset by the **TEST/RESET** button. The CO detector has detected the presence of 70 ppm.
- Steady **red** indicates a **CO ALARM** condition. The detector has sensed the presence of levels over 100 ppm of Carbon Monoxide. The alarm horn will sound continuously until the **RESET** switch is reset.
- Alternating **red** and **green** indicates a malfunction alarm.

## Alarm

When the alarm sounds have the detector and the motorhome checked by an authorized service technician as soon as possible. Never disconnect a CO detector to silence an annoying alarm. Evacuate the motorhome immediately when the **red** light is lit and the alarm sounds. Do a head count to check that all persons are accounted for. Call the nearest fire department and ask them to determine the source of the Carbon Monoxide. Do not re-enter the motorhome until it has been aired out and the problem corrected.

**Potential Sources of CO when operating the motorhome:**

- Engine Exhaust
- Portable Space Heaters
- Gas Stoves and Ovens
- Defective Engine Exhaust System
- Other Motorhomes
- Portable Grills
- Camp Fires
- Generator Exhaust
- Portable Generators

## Testing

**Test Procedures:**

Test the Carbon Monoxide detector operation after the motorhome has been in storage, before each trip and at least once a week during use. Test the alarm by holding the **TEST/RESET** button in until the alarm sounds. The alarm will sound four beeps and the indicator lamp goes steady **red**. Six seconds later the alarm will again beep four times and the indicator light goes steady **green**.

**Peak Level Memory:**

The CO detector has the capability to remember the level of Carbon Monoxide that activated the alarm. Press the **TEST/RESET** button for less than one second and observe the visual and audible signals.

- One beep and a **green** flash indicate memory is clear.
- Two beeps and two **red** flashes indicate less than 100 ppm.
- Three beeps and three **red** flashes indicate less than 200 ppm.
- Four beeps and four **red** flashes indicate greater than 200 ppm.

**NOTE: Memory is erased when power is disconnected for 15 seconds.**

## Cleaning

Use a vacuum cleaner to remove dust or any other buildup on the detector. Do not wash. Wipe the detector with a damp cloth and dry with a towel. Do not open the detector for cleaning. Do not paint the detector. It is recommend that the Carbon Monoxide detector be replaced every 10 years.

## Troubleshooting

The CO detector has **NO** user service parts. If there is a problem with the detector refer to an authorized service center. **DO NOT REMOVE POWER**.

**INSPECT: Check the CO detector weekly and at the beginning and end of each trip.**

## FIRE EXTINGUISHER

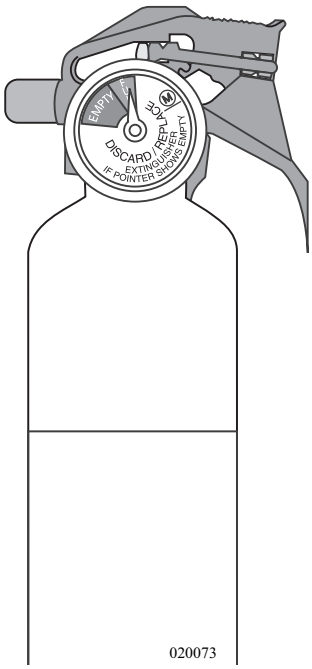


The fire extinguisher in the motorhome is located near the main entrance door. Please read the operating instructions that are printed on the fire extinguisher. If there is any doubt on how to operate the fire extinguisher, you and your family should practice using it. Be sure to replace or recharge the extinguisher immediately after use.

**Inspect** the fire extinguisher at least once a month. Do so more frequently if the extinguisher is exposed to weather or possible tampering. Do not test the extinguisher by partially discharging. Internal pressure will escape and the fire extinguisher will need to be replaced.

**Use the PASS word!**

**P**ull the pin to unlock the extinguisher.

**A**im at the base (bottom) of the fire and stand 6-10 feet away.

**S**queeze the lever to discharge the agent.

**S**weep the spray from left to right until totally extinguished.

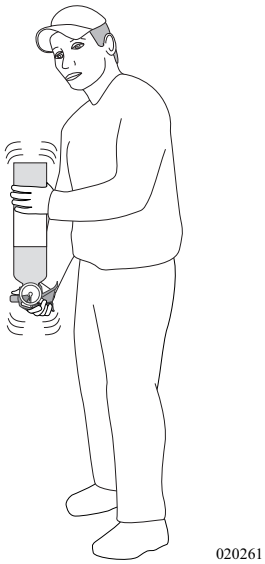


**WARNING: Road vibration will cause extinguisher powder to compact and may cause extinguisher malfunction. Invert and shake extinguisher monthly.**

## EGRESS EXIT WINDOW

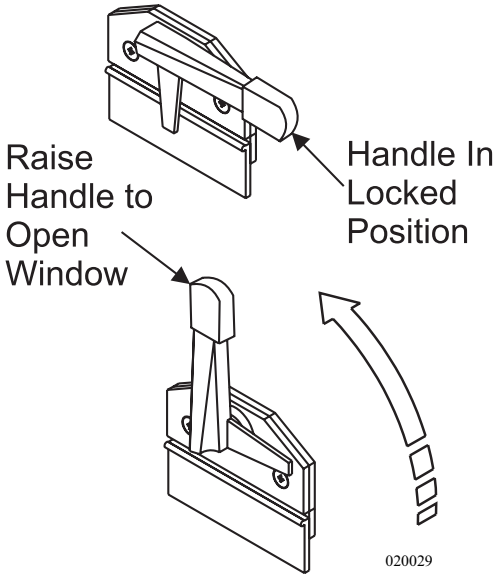


Egress Window Handle

An egress window is designated for use as an exit in the case of an emergency. Inside the motorhome the egress window is easily identified by the red locking handle. It is also marked as an “EXIT.” Outside of the motorhome, the egress window is identified by hinges along the top of the window. The glass slider in the egress window operates the same as all other windows. To open the egress window, lift the red handle and push outward on the window. Pull the window closed and lower the handles to lock the egress window.

The egress window should be opened twice a year to ensure proper operation. Over time, the rubber seal will tend to stick to the egress window. Occasional operation will help prevent the rubber seal from sticking.

## SECURITY SYSTEM (Optional)

The "Viper" security system is designed to provide years of trouble free operation. The only maintenance required is to change the battery in the remote once a year. If the remote battery is weak, the range of the remote will decrease and the green LED indicator will dim. The two remote transmitters (key fobs) are programmed to the receiver using a computer based "Learn Routine." The learn routine will dictate how the system operates. The Standard transmitter configuration is set at installation. An authorized dealer can customize the transmitter configuration.

**Transmitter Configuration:**

**Aux Button -** Controls the silent mode function and bay door locks.

**Lock Button -** Controls the arming function.

**Green LED -** Indicates power at the Key Fob.

**Unlock Button -** Controls the disarming function.

**Horn Button -** Controls the panic function.

**To Arm the System:**

- Press the **LOCK** button on the transmitter remote for one second.

The system will "chirp" once. The parking lights flash once. The entry door and selected bay doors will lock. The **red** LED system status light flashes once per second indicating the system is armed and functioning properly.

If the system chirps once after it has locked the doors, this is a "Bypass Notification." The system is armed; however, one or more system zones are "open." The **red** LED will flash in groups that indicate which system zones are open.

**When Armed:**

- The System will use a "Warn Away" chirp signal. A light impact will cause the siren to chirp.
- A continuous light impact or a heavy impact will sound the alarm.
- Opening the entry door, selected bay doors or a bedroom window will cause the siren to chirp for three seconds followed by a continuous alarm.

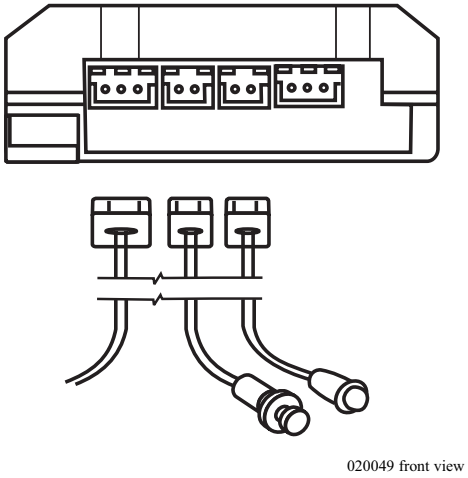


*Valet/Program button & red LED status light.*

**To Disarm:**

• Press the **UNLOCK** button on the transmitter remote for one second.

The parking lights flash twice and the alarm chirps twice. The entry door unlocks and selected bay doors unlock. Any additional chirps are "Tamper Alert." When the system chirps four or five times during disarming, the **red** LED will blink the code for the zone that has been tampered with.

Lock & Unlock simultaneously = Turns house power On/Off

Press AUX for 3 seconds= Unlock bay doors

020249

**House Battery Cut-off:**

Interior house power can be turned on or off from the remote. Simultaneously, press the lock and unlock buttons. This will turn the interior house power on or off.

**NOTE: The roof air conditioner will not function if interior house power is off.**

**Panic Mode:**

Press the **HORN** button for one second. The siren will sound and the parking lights will flash for the programmed duration. The Panic Mode can be exited at any time by pressing the **HORN** button again. If you are threatened, this is helpful in attracting attention to the motorhome.

**Silent Mode:**

Prior to arming or disarming the system, the confirmation chirp(s) can be temporarily turned **OFF**. Press the **AUX** button for less than one second prior to arming or disarming the system. The system will either arm or disarm silently. The chirp will be silenced only once each arm or disarm cycle.

Press and hold the **AUX** button for three seconds to unlock the bay doors. The entry door will remain locked.

**NOTE: A Warn Away chirp will not sound when the system is armed in Silent Mode. A heavy impact or opening the entry door will sound a continuous alarm.**

**Sound and Window Sensors:**

Two sound sensors are used to detect impact noises (repetitive or single heavy impact) and glass breakage. Sound sensors are located in the galley and in the bedroom. Window sensors are located on the bedroom windows only. These sensors detect window screen movement. If the screen is opened more than ½ inch, the alarm will sound if the security system is activated.

Each sensor is equipped with a pair of replaceable batteries. Test sound and window sensors monthly for proper operation.

**To Test Sound Sensor:**
- Clap hands loudly next to sensor. LED should briefly illuminate twice.

**To Test Window Sensor:**
- Momentarily press on housing next to LED. LED should briefly illuminate.

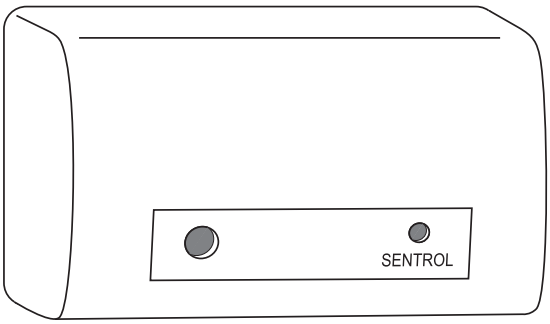


*Sound Sensor.* 020248

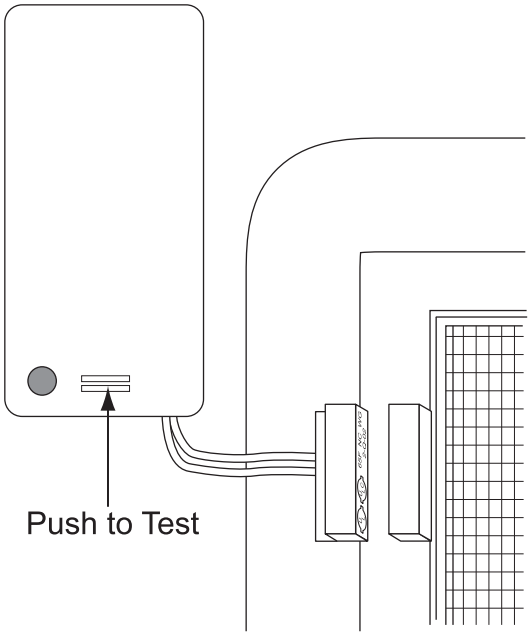


*Window Sensor.* 020247

**Valet Mode:**

This feature is useful in servicing, washing or storing the vehicle. The **Valet Mode** will not allow the system to sound an alarm. While in **Valet Mode** the remote will lock and unlock the doors. The **red** LED status light is a solid glow in the **Valet Mode**. There are two ways to access the **Valet Mode**: One is with the key fob, the other is with the **Valet/Program** button.

**Entering Valet Mode with Key Fob:**
1. Open the entry door.
2. Press the **LOCK** button.
3. Press the **UNLOCK** button.
4. Press the **LOCK** button again.
5. Ensure the **red** LED is a steady glow.

**Entering Valet Mode with Valet/Program Button:**
1. Turn the ignition **ON**.
2. Turn the ignition **OFF**.
3. Press and hold the **Valet/Program** button ten seconds and release.
4. Ensure the **red** LED is a steady glow.

**Multi-Level Security Arming:**

This feature applies to one arming cycle only. The selection of which sensor inputs are active and which are bypassed can be set when arming. Press the **LOCK** button within five seconds after arming. Each time the **LOCK** button is pressed another zone or zones are bypassed. Reset the system to monitor all zones by turning the ignition key on.

**NOTE: Press the lock repeatedly to bypass Zones. The system will appear to be non-functional. Reset the Zones using the ignition.**

**Table of Zones:**

- Zone One is the pin switches.
- Zone Two is the Warn away.
- Zone Three is the Entry Door.
- Zone Four is the Bay Doors.
- Zone Five is the Ignition.

**Quick Reference Guide:**

- **LOCK** - Arms or activates the system.
- **UNLOCK** - Disarms or deactivates the system.
- **LOCK** - While driving will arm the system.
- Ignition **ON** and the **Valet** button pressed disarms without a transmitter.
- Ignition **ON**, then **OFF**, then pressing the **Valet** button for ten seconds enters or exits the **Valet Mode**.
- Press and hold the **HORN** button for one second to enter the **Panic Mode**.
- Press the **HORN** button to exit the **Panic Mode**.
- Press the **AUX** button for **Silent Mode** Activation.

**Tips:**

- Remember the location of the **Valet/Program** button.
- Know the number of **Valet/Program** button pulses for disarming.
- There is a 24 hour support number located on the back of the Key Fob.
- The headlights will only flash when using the Key Fob.
- The range of the remote Key Fob is about 1,200 feet.

**Troubleshooting:**

- Valet/Program not responding - Ensure the button is plugged into the blue port of the receiver.
- Red Status LED doesn't work - Ensure the LED is plugged into the correct socket.
- Shock Sensor won't trigger alarm - Ensure NPC system has not triggered.
- System has no power - Ensure the 15 Amp fuse (front run panel) is not blown.
- The system is not responding to the remote - Ensure the **Valet** mode is not entered.

**Changing the Programming - Entering the Learn Routine:**

The following information is provided for changing the programming features. It should be used only by an authorized service center.

1. Open the door.
2. Turn ignition **ON**, then **OFF**.
3. For menu selection: Press and hold the **Valet/Program** button.
4. Select a feature.
5. Program a feature.
6. Release the **Valet/Program** button.

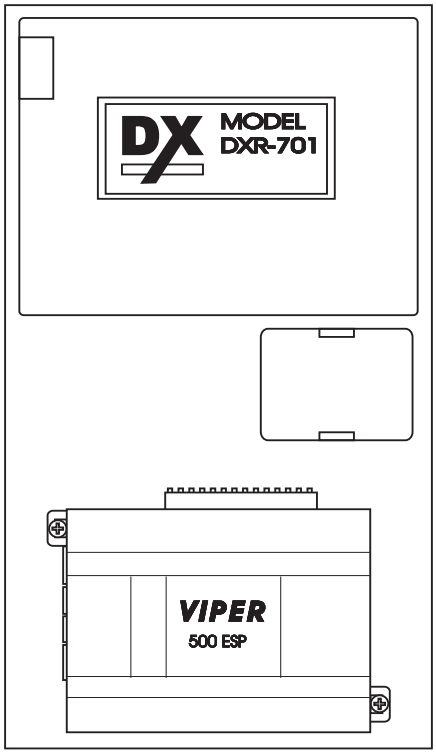

020048

**When the feature is programmed:**

- Other features can be programmed within the same menu.
- Another menu can be accessed.
- The learn routine can be exited.

**To access another feature in the same menu:**

- Press the **Valet/Program** button the number of times necessary to advance to the desired feature.
- Press the **Valet/Program** button and **HOLD**.

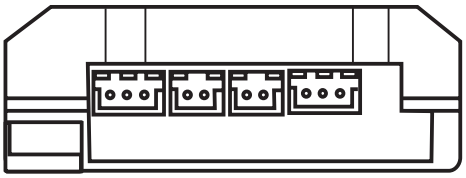
020049

**Selecting another menu:**

- Press and hold the **Valet/Program** button.
- The system will advance and chirp is audible to accessed menu after three seconds.

**Exiting the Learn Routine:**

This can be done in one of four ways:

1. Close the door.
2. Switch ignition ON.
3. Do not respond for longer than 15 seconds.
4. Press the **Valet/Program** button an excessive number of times.

**System Feature Menu:**

The system features are broken into two separate menus. Both can be accessed to customize the system by an authorized dealer. The following features have been programmed into the security system.

**NOTE: *Bold indicates the factory default settings.**

**Basic Features - Menu One:**

**Active/Passive Arming:** Select ***ACTIVE**. When active arming is selected, the system will only arm with the transmitter. Passive arming allows automatic arming after the door is closed.

**Chirp ON/OFF:** Select ***Chirp ON**. Allows control of the chirp which confirms arming or disarming.

**Ignition Controlled Door Locks ON/OFF:** Select ***ON**. When turned on the doors will lock three seconds after the ignition is turned ON and unlock when the ignition is turned OFF.

**Active/Passive Locking: *Active** selected. Active locking means the doors will not lock when the system is passively armed. Passive locking means the doors will lock when the system is passively armed.

**Panic with the Ignition ON:** Turned ***OFF**. Many states prohibit a siren from sounding in a moving vehicle. This feature is designed to comply with those laws and regulations.

**Door Lock Pulse Duration: *.8**

**Forced Passive Arming ON/OFF**: Forced Passive Arming ***OFF**. Forced Passive Arming will occur one hour after the ignition is turned OFF. When this feature is turned on it will force passive arming, even if a zone is left open or invalid.

**Automatic Engine Disable (AED) ON/OFF:** *Not wired.

**Armed While Driving/Vehicle Recovery System (VRS):** Turned ***OFF**.

**Code Hopping ON/OFF:** Turn ***ON**. This enables a mathematical formula to change the code each time the transmitter and receiver communicate.

**Advance Features - Menu Two:**
**Siren/Horn Honk: *Continuous.**

**Siren Duration 30/60 Seconds: *180 seconds.**

**Nuisance Prevention Circuitry (NPC) ON/OFF:** With ***OFF** selected. This enables the system to respond to repeated triggers on the sensor inputs indefinitely. When a zone triggers three times in one hour, it may be necessary to switch to **ON**. This will bypass that zone for an hour. That hour will determine if that zone can trigger the system. If that zone triggers in the hour it will reset the one hour timer. If that zone does not trigger in the hour the zone will become active and allow the system to be triggered again.

**Progressive Door Trigger ON/OFF: *ON.**

**Valet Pulse Count 1 to 5 Pulses: *ONE**. This is the number of times the Valet/Program button must be pressed before disarming the system.

**Door Trigger Error Chirp ON/OFF: *ON.**

**Ignition Controlled Dome light Supervision ON/OFF:** *Not wired.

**Double Pulse Unlock ON/OFF: *OFF.**

**Channel 3 Validity/Latched:** Latched Rest with Ignition/30 Second.

**Timed/Second Unlock Output: *ON AUX Channel 3.**

**NOTE: *Bold indicates the factory default settings.**

## SAFE

The motorhome uses a small, sturdy floor safe for protection of important documents, semi-precious valuables and petty cash. The safe location will vary with the different floorplans. Consult with the dealership about the safe location.

The presise internal lock mechanism, over time and use, will require cleaning, lubricating and adjustments. Duplicate and/or Replacement keys can be achieved by contacting Allied Safe at 1-800-448-8338, or website alliedsafe.com.

# ~ NOTES ~

# Exterior & Interior Care

## Section 3

**EXTERIOR CARE ..... 127**
Corrosion ..... 127
Washing ..... 128
Drying ..... 128
Waxing ..... 128
Tire Care ..... 129
Aluminum Wheels ..... 129
Bright Metal ..... 130
**EXTERIOR MAINTENANCE ..... 130**
Roof Care & Seal Inspections ..... 131
**INTERIOR CARE ..... 133**
Cockpit ..... 133
**FABRICS ..... 134**
Fabric Cleaning Codes ..... 134
Fabric Specifications Charts ..... 136
Vinyl ..... 139
Leather ..... 141
Ultrasuede® ..... 142
Ultra-Leather ..... 143
**FLOORS ..... 144**
Carpet Cleaning ..... 144
Tile Floors ..... 145
**SHOWER ..... 147**
**CEILING ..... 148**
Ceiling Mirror ..... 148
**WALL COVERINGS ..... 148**
**WOOD CARE ..... 150**
**COUNTERTOPS ..... 152**
Solid Surface ..... 152
**WINDOWS ..... 153**
Condensation ..... 153
**WINDOW TREATMENTS ..... 154**
Mini-blinds ..... 154
Day/Night Shades ..... 155
**MOLD & MILDEW ..... 156**
**PEST CONTROL ..... 158**
**GENERAL LUBRICATION MAINTENANCE ..... 162**
Lubricants ..... 162
Lubricant Classification ..... 162
Proper Fluid Disposal ..... 163
Greasing ..... 164
**STORAGE ..... 165**
Short Term ..... 165
Long Term ..... 166
Winter Storage - Checklist ..... 169
Removal from Storage ..... 170

### Corrosion

The most common cause of corrosion to the motorhome is the accumulation of road salts, grime and dirt. These elements, combined with moisture, may possibly cause early component failure. Salt air and fog from coastal trips can greatly accelerate the corrosion process. Corrosive materials collected from roadways accumulate on the undercarriage, around wheel openings and on the radiator charge air cooler package. These areas need to be cleaned periodically to help prevent component failure due to corrosion. If the motorhome is driven in areas where road salts are used it should be washed at least once a week. Otherwise, it is recommended to hose off the undercarriage area at least once a month to help minimize the corrosion process. High pressure washers or steam cleaners are the most effective way of cleaning off the underside and inside wheel openings. **Avoid directly spraying the painted surface with a high-pressure washer.** Remove road debris and mud that has accumulated. Material left behind can intensify the corrosion problem.



**CAUTION: Exercise caution when cleaning the radiator charge air cooler package. Damage to the fins can result when using a high pressure washer or steam cleaner. Nozzle discharge pressure can exceed 1800 psi. Avoid using high pressure steam cleaners on the exterior paint surfaces. Remove all spattered washing debris from the exterior paint surfaces as soon as possible.**

### Washing

The life of the exterior paint finish can be extended if properly cared for. Periodic cleaning will help preserve the paint finish. The motorhome is painted with a “base coat, clear coat system.” The clear coat is a polyurethane based material which brings out the shine or luster to the base coat paint. Care should be used when washing the motorhome. Use only mild detergents or preferred specifically designed automotive detergents. Avoid using abrasive cleansers or laundry detergents as they will scratch the clear coat and leave a soap film. The use of specially designed automotive washing utensils, such as soft bristle brushes, are acceptable as long as they do not trap abrasive material and scratch the surface while being used. Before washing the motorhome remove most of the accumulated dirt and “road wash” behind wheel openings, below the windshield and on the rear of the motorhome. If the build up is excessive, run water over a soft brush while gently scrubbing the surface in one direction. This will help float away the “build-up” from the clear coat. Avoid back and forth or circular motions as this may act like sandpaper, scratching the clear coat and leaving a haze or “swirl marks.” After removing the heavy build-up, use the mixed detergent solution to wash the motorhome. Start washing at the top of the motorhome working towards the bottom. If possible, wash the motorhome in a shaded area when the exterior is not hot to the touch. If necessary, turn the motorhome around to keep the area being washed in the shade. Try not to allow the detergent to dry onto the clear coat surface. Use plenty of water when rinsing the surface to remove any detergent residue.

## Drying

Drying chamois cloths come in natural and synthetic materials. Either type is acceptable as long as the surface is clean. Soak the chamois in clean water until all chamois material has absorbed water. Wring excess water from chamois. Start at the top and work towards the bottom. Use a downward "S" pattern to remove water from the surface and wring out the chamois as needed. Using a chamois cloth to remove the rinse water is not necessary, but the effort can be worthwhile.

## Waxing

To wax or not to wax? This is a good question. There are many schools of thought on this issue. The two most common thoughts are:

- The clear coat needs to "breathe." A layer of wax will seal the clear coat not allowing it to breathe, possibly leading to failure of the clear coat.
- If the surface is not waxed, what is protecting the surface from the environment (road salts, acid rain, road tar, ultraviolet light)?

**It is recommended to wax the motorhome twice a year: spring and fall.** Many types of protective barriers are available today that may be applied to the clear coat: glazes, waxes, polishes, rubbing compounds or combinations of these products.

**INFO: When selecting a product for use follow the product manufacturer's recommended application instructions.**

**Types of Products:**
**Glazes:** Glazes are generally used to fill very fine scratches in the clear coat, being applied either by hand or by using a polisher with a special pad.

**Waxes:** Waxes come in many types of chemical make-ups. The popular Carnauba wax is a natural occurring wax from the leaves or fronds of the Carnauba palm tree. Mineral waxes have a paraffin base. There are also other topical application products which contain silicone.

**Polishes:** Polishes usually contain a combination of wax based substances with an abrasive, getting the two for one idea. These products can be too abrasive for clear coats and are not recommended for use.

**Rubbing Compounds:** These types of products are generally applied by using a buffer. The use of rubbing compounds should be left to professionals as undesired results can quickly occur. These types of products are generally used to correct or flatten a surface by removing high spots or small amounts of material.

When selecting a product the container should be marked, "safe for clear coats" or "clear coat safe." Carefully follow all manufacturer's application instructions when using a product. Upon first use of a product, try it on a "small test spot" in an inconspicuous area in case an undesired reaction occurs.

Observe the test area from different angles checking for hazing or swirl marks.

If an abnormal reaction to the finish occurs, discontinue product use and consult the product's manufacturer. If the product is a paste, do not allow dried paste to be baked on by the sun. Remove paste shortly after drying. Clean, dry, 100% cotton cloths or cotton baby diapers are best suited for the removal of dried paste. Turn the cloth often. Use a separate clean cloth to buff. The surface should feel "slick" when rubbing the cloth lightly over it. Avoid repeated wax applications which can cause wax to build up. Some very fine scratches or swirl marks may be removed by an application of a glaze. These types of glazes fill the scratches or swirl marks.

The motorhome has a large surface area. Washing and waxing may not be completed in one afternoon. Select sections to wax until the motorhome is complete. If the task seems overwhelming, have an automotive detailer perform the task.



## Tire Care

Road oil will cause deterioration of the rubber. Dirt buildup will help hold chemicals in the air next to the tire and will also cause deterioration.

When cleaning any rubber product, proper care and methods in cleaning must be used to obtain the maximum service years out of the tires. Use a soft brush and a mild detergent to clean the tires. If a dressing product is used to "protect" the tires from aging, use extra care and caution. Tire dressings that contain petroleum products or alcohol may cause deterioration or cracking.

In many cases it is not the dressing that causes a problem but the chemical reaction that subsequently occurs. When these same dressing products are used on a passenger car tire that is replaced every three to four years, it is rare to see a major problem. However, in most cases recreational vehicle tires may last longer due to limited annual mileage and exposure.

## Aluminum Wheels

- Clean frequently with high pressure water from a hose. The use of mild detergent will speed the cleaning process. Do not use harsh alkalis, alcohol or acidic cleansers. A secondary hand washing with a soft cloth may be required to remove some stubborn road films.
- When the tires are removed, **inspect** and clean the entire wheel. Use a wire brush or sandpaper to remove dirt, corrosion or any foreign materials from the tire side of the rim. Do not use a wire brush or other abrasive substances to remove dirt and corrosion on the polished surface of the wheel.

To maintain the original appearance of the aluminum wheels the following procedures are recommended:

1. After installing new wheels (prior to driving the motorhome) use a sponge, cloth or soft fiber brush to wash the exposed wheel surfaces with a mild detergent/warm water solution.
2. Rinse thoroughly with clean water.
3. Wipe dry to avoid water spots.
4. Use a high quality, non-abrasive polish to remove stubborn road tars, insects or hard to remove deposits.
5. To protect the appearance, wax the cleaned surface with a high quality car wax.
6. Clean the aluminum wheels as frequently as required to maintain their appearance.

### *Bright Metal*

All chrome, stainless steel and aluminum should be washed and cleaned each time the motorhome is washed. Use only automotive approved non-abrasive cleaners and polishes on exterior bright work. Aluminum wheels should be cleaned regularly with a non-abrasive cleaner recommended for aluminum wheel care. Do not use rubbing compounds. Do not use abrasive cleaners or compounds to clean the mirrors.

**NOTE: When using chemicals to remove road tars, use only automotive type products that are recommended for use on painted surfaces and fiberglass. Observe the warning recommendations and directions printed on the container of any agent being used.**

## EXTERIOR MAINTENANCE

The motorhome is subject to a great deal of outside conditions. While the coach is parked it is exposed to extreme temperatures, humidity, ultraviolet rays, acid rain and other organic environmental conditions. While in operation the coach is subject to twisting and flexing caused by (for example) going in and out of driveways, bouncing through potholes and driving through winding mountain roads.

**Inspect** the fiberglass exterior. Periodic inspection may reveal minute cracks in the surface commonly called “spider cracks” or “hairline cracks” which are caused by the flexing of the fiberglass exterior. These are normal. If a crack presents a threat to the integrity of the fiberglass it will open up and the weave of the cloth would be visible. If the exterior has been damaged, prevent moisture penetration, especially in freezing climates. Cover the area as quickly as possible. Use plastic sheeting and tape, if necessary, so that moisture will not get into the motorhome and damage the interior.

Periodic resealing of joints and seams is necessary to prevent the entrance of moisture into the motorhome. Enough emphasis cannot be placed on this issue.

Extreme damage from a water leak can occur rapidly. Never leave the vehicle unattended with the slide room extended. If the vehicle is to be stored outside throughout the winter months, a full interior inspection for water leaks should be made bi-monthly.

Extensive sealing has been done at the factory; however, the normal twisting and flexing that occurs while traveling may have compromised a seal or seam. **All joints and seams should be inspected at least twice a year and recaulked as necessary.** Special attention should be directed toward the roof air conditioning seals, ceiling and plumbing vents, skylights, roof mounted antennas, windows, door molding, clearance lights and the beltline molding.



Specific sealant products should be used in the areas for which they were designed. These items can be obtained from recreational vehicle parts suppliers. Listed below are some of the more common sealants and the areas in which they are used. Approved sealants are available at service centers and authorized dealers.

**INSPECT: All joints and seams should be inspected at least twice a year and recalked as necessary.**

**WARNING: Some products may contain hazardous materials which require special handling. Read labels carefully. Follow all of the product manufacturer's safety requirements.**

**Sealant Types**

**Acryl-R:**

Acryl-R is used on all roof openings such as vents, skylights, any roof-mounted antennas and ladder roof mounts. This product is usually found in a caulking tube. The sealant should be applied only where the equipment bases meet the roof. Two colors are available, white and silver. The silver is used on items mounted on the forward painted area of the roof. White is used at all other points. Remove any old sealant that is lifting or not adhered well. Sealant that is adhering need not be removed. Clean the old sealant and the area beyond old sealant before applying new sealant. Make sure the roof is dry and free of dirt. Care should be used when near an edge, as the product will spread after application. Masking tape may be applied around the area to be sealed. This keeps the sealant from extending beyond the desired area. With caulking gun, carefully apply new sealant where needed. Work caulking gun in a manner that causes the sealant to fully adhere to area applied. Allowing adequate cure time for the sealant. Sealant applied over dirt or damp areas will compromise sealant effectiveness.

Roof sealant is not required for the roof air conditioners, as these use a closed cell foam base gasket. The roof air conditioners should be checked for tightness by the four mounting bolts, one located in each interior corner of the air conditioner roof opening. Torque specification is 40 to 50 in/lbs. The base gasket should be compressed to approximately one half inch.

**Acrylic Sealants (geocel 2300):**
This product is used where items are sealed under a painted surface such as the metal corners of the slide-out room. The material is specially formulated to allow paint adhesion.

**Black Urethane:**
This product is used for sealing the windshields. It was not designed to fill holes or other imperfections. Black urethane comes in a tube and it applies much the same way as silicone. Clean up using solvents such as paint thinner. Gloves are required as this material is hazardous.

**Silicone Sealant:**
Primarily this product is used on the sidewalls where a hole has been made and an item installed. This includes Windows, Doors, Handles, Beltline Molding, Latches and around bases of items surface mounted such as clearance lights. Old peeling sealant should be removed. Avoid using metal utensils which can scratch the painted surface. Use nylon sticks or equivalent. Avoid using lacquer thinners or ketone based solvents as these chemicals can damage painted surfaces. Be sure the surface is clean and dry before application. Cut the tube at an angle with smallest usable opening. Avoid a heavy bead as a little goes a long way. Use finger at a 45° angle on beaded surface to smooth out product. Do not moisten finger, use a disposable latex glove. Keep rags or paper towels handy for clean up. Use care when applying silicone. Plan ahead before starting a bead, look for obstacles that may impede application.

**Spray Foam:**
This product is used as a sealant where a hole has been made for items such as water lines or wires that are coming through a floor opening.

The cockpit area has several areas that require special care and cleaning. The dashboard itself is a molded fiberglass vinyl wrapped pod. The instrument panel is comprised of various gauges and switches. The instrument panel may also have various other items added. Though the dashboard and instrument panel are part of the cockpit, each has different care and cleaning requirements. The vinyl wrapped dash pod is cleaned using the instructions for Vinyl Care in this section. In the event a blemish or small cut occurs in the vinyl contact a professional upholstery repair service. There are several methods that can be performed to make these repairs.

The instrument panels are a common grade plastic and should be cleaned using a mild soap and water solution and a 100% cotton cloth. Dampen the cloth with the soap and water solution then wipe the panel. Dry using a separate cotton cloth. Plastic manufacturers recommend any plastic polish product can be used to brighten the appearance. Some products that are available are Novus Plastic Care® system. This is a three-part system that will clean, polish and protect as well as remove minor scratches in plastic products. Meguires® is another quality polish that can be used. A common product that can be used to remove scratches and polish is Johnson Paste Wax®. This will require extensive buffing and rubbing.

Some gauges may use glass lenses that should be cleaned using a glass cleaner, while others will use plastic or plexiglass lenses. When cleaning a glass face, the cleaner should be sprayed on the cleaning cloth instead of directly on the lens. If sprayed directly on the lens, there is a chance of over spray or runoff contacting the plastic.

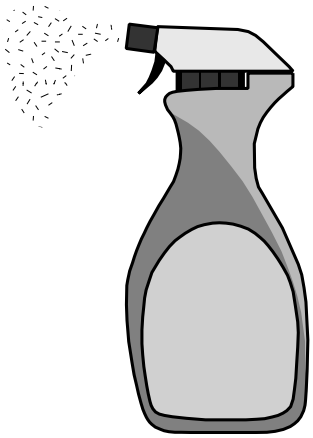

Cleaner.eps

**CAUTION: Most glass cleaning products are volatile to plastics; extreme care must be used to prevent the glass cleaners from contacting the plastic. This can make the plastic brittle and dull the finish.**

To determine if the lens is glass or plastic, simply tap the lens with a fingernail. Plastic lens will have a dull hollow sound whereas glass will have a clear ping.

## FABRICS

Most fabrics have a designated cleaning code assigned to them. The cleaning code is determined, in most cases, by the content of the fabric. The code represents the cleaning agent and method that is approved by the fabric industry. If the fabric is abused, it can be damaged. Special care needs to be taken when the motorhome is exposed to a very humid climate for an extended period of time. Cover all upholstery and make sure window coverings are down to protect from sun damage.

Protect the fabric from any unnecessary exposure to moisture. Frequently used items will wear accordingly and may require more attention than those items not regularly used.

**Use the following guidelines for cleaning upholstery fabrics:**

- Water-based cleaners are not recommended.
- If a spill does occur, blot the soiled area. Do not rub it.
- Some solvents are not recommended since they may have an adverse reaction on a specific backing of the upholstery fabric.
- To prevent overall soiling, frequent vacuuming or light brushing are recommended to remove dust and grime.
- Clean spots using a mild water-free solvent or dry cleaning product.
- Clean only in a well ventilated area and avoid any product containing carbon tetrachloride or other toxic materials.
- Use a professional furniture cleaning service for overall cleaning.

### *Fabric Cleaning Codes*

The codes listed below refer to cleaning instructions recommended by the fabric manufacturing industry. Since most fabrics are hand-selected it is up to you to obtain the cleaning code for a particular fabric. If a spill occurs blot the moisture as quickly as possible. **Do not** use soap and hot water as this may set a stain. Obtain the cleaning code for the fabric as soon as possible.

**"W" -** Clean this fabric with the foam only of a water-based cleaning agent to remove the overall soil. Many household cleaning solvents are harmful to the color and life of a fabric. Cleaning only by a professional furniture cleaning service is recommended. To prevent overall soil, frequent vacuuming or light brushing to remove dust and grime is recommended.

**"S" -** Clean this fabric with pure solvents (petroleum distillate-based products such as Energine, Carbona, Renuzit, or similar products may be used) in a well ventilated room. Cleaning only by a professional furniture cleaning service is recommended.

**"S/W" -** Clean this fabric with the foam only of a water-based cleaning agent or with a pure solvent in a well ventilated room (petroleum distillate-based products such as Energine, Carbona, Renuzit, or similar products may be used). Cleaning only by a professional furniture cleaning service is recommended. To help prevent overall soiling, frequent vacuuming or light brushing to remove dust and grime is suggested.

**CAUTION: Use of water-based or detergent-based solvent cleaners may cause excessive shrinking. Water stains may become permanent and unable to be removed with solvent cleaning agents. Avoid products containing Carbon Tetrachloride as it is highly toxic. To help prevent overall soiling, frequent vacuuming or light brushing to remove dust and grime is recommended.**



**"P" -** The article is resistant against perchlorethene, cleaning benzine (spirit), white spirit, R-11 and R-13.

**"Dry Clean Only" -** Cleaning only by a professional dry cleaner or furniture cleaning service is recommended for this fabric.

**"X" -** Vacuum only. A non-metallic brush may be used.

**<u>*Machine Washing for 100% Polyester:</u>**

**"Wash Cycle" -** Use synthetic setting and high water level with mild agitation. A mild soap or detergent in water not to exceed 160º F. No bleach or fabric softener.

**"Drying" -** Use low temperatures, a synthetic setting of 85º F to 90º F maximum should be used. Do not exceed three to five minutes time on the synthetic cycle. If washed at 160º F, the maximum temperature which can be used to dry is 140º F. Hang or fold immediately after drying.

**"Finishing" -** If necessary, press as following:
- Iron on low setting (275° F) with damp cloth or steam iron using a dry press cloth.
- Grid Head press for short intervals with minimum steam. Do not lock the head.
- Flat bed press dampened drapery using cloth covering.
- Avoid prolonged contact with heat.

## *Fabric Specifications Charts*

*Navigator 50th Anniversery Fabrics*

| PATTERN/COLOR | APPLICATION | CONTENT | CODE |
|---|---|---|---|
| **50th Anniversary Edition .674** | | | |
| Leather Classic Rider Color Fools Gold | Sofa (fab/leather combo) | Leather | W |
| Armitage Color Taupe 0200 (seat & back cushion) | Sofa (fab/leather combo), Chair | 71% Olefin, 29% Essera | Dry Clean |
| Arlington Paisley REC 14313F | LR Lambriquen, BR Lambriquen | 60% Cotton, 40% Polyester | W/S |
| Arlington Acorn | LR Lambriquen, BR Lambriquen | 52% Cotton, 48% Polyester | Dry Clean |
| Majesty Silk Color Bark (backing / 302) | LR & BR Lam, Jumbo Cord, Band, Skirt | 100% Silk | S - Dry Clean |
| Strie Tafetta Col. 0057 Ginger | Bedspread | 60% Rayon, 40% Polyester | W/S |
| Morgan 0398 Espresso | FSD | 56% Acrylic, 42% Polyester, 2% Nylon | W |
| Bee Tigereye | BR Pillow s | | |
| *Fox-11 48043-A2GU Brown* | *Fur Throw - Bedroom 54"w x 60"l* | 80% Acrylic, 20% Polyester | X |
| Kingdom Brow n Pepper (use w hen out of Fox Brow n) | Fur Throw - Bedroom 54"w x 60"l | | |
| 21815 Tieback | Closeoff Rope Tieback | 24% Polyester, 23% Rayon, 10% Acetate, 14% Acrylic, 29% Synthetic | S/W |
| Pearl Natural | Windshield Drape | 100% Polyester | W/S |
| Tumblew eed Parchment | Vinyl | Vinyl | Vinyl |
| Victoria Rope 1/2" Color Midnight | Rope - LR Lambriquen | 35% Polyester, 30% Olefin, 35% Rayon Chenille | S/W |
| 2" Loop Fringe Victoria - Midnight | Loop Fringe | 56% Polyester, 44% Rayon Chenille | S/W |
| Mazan Collection 3/8" Multi Col Leopard | Rope - BR Lambriquen | 100% Cotton | W/S |
| Mazan Collection1 3/4" Brush Fringe Leopard | Brush Fringe | 100% Cotton | W/S |

## Navigator 2004 Fabrics

| COLOR/PATTERN | APPLICATION | CONTENT | CODE |
|---|---|---|---|
| **Silk Road .650** | | | |
| 550444 Color 033-556 MO33347-010 | Sofa, LR Lambrequin, Chair | 83% Rayon, 17% Polyester | S |
| Bakhtiari 097045 Washed | Dinette Cushions,LR Lambrequin, FSD, LR/BR pillow shams | 65% Rayon, 35% Egyptian Mercerzied Cotton | S |
| Caspian 999180 | Bedspread, LR/BR Lamb, LR Pillow | 70% Rayon, 30% Polyester | S |
| Ravi SH Gold Taupe | BR Lambrequin, Headboard | 57% Cotton, 43% Rayon | Dry Clean |
| Nikita Color Circa | BR Pillows, Headboard | 60% Spun Rayon, 40% Polyester | S |
| Tumbleweed Sand | Pilot/Co-Pilot Seats - Leather | Leather | Leather |
| Tumbleweed Sand | Pilot/Co-Pilot Seats - Vinyl | Vinyl | Vinyl |
| Virginia Green | Opt. Leather for furniture | Leather | Leather |
| Pearl 009 Natural | Windshield | 100% Polyester | W/S |
| BRUNSWICK CHALK | VINYL TRIM AROUND TV (OPTIONAL) | Vinyl | Vinyl |

| | | | |
|---|---|---|---|
| **Butter Rum .936** | | | |
| R-Poet Almond Color # 01000 | Sofa | 65% Acrylic, 35% Essera | Dry Clean |
| Jeter - Lava | Window Boxing | 45% Polyester, 42% Acrylic, 8% Rayon, 5% Cotton | S |
| 821933 Color 963-312 Item # MO36804-004-1 | FSD Chairs | 58% Rayon, 42% Polyester | S |
| R- Marly Color Mocha | LR Pillow, LR & BR Val, Bedspread, Headbrd welt | 61% Viscose, 39% Polyester | Dry Clean |
| Shalini Color Otter | BR Pillow, Headboard | 100% Silk | S |
| Ortiz Stone | BR Accent Pilow | 72% Acrylic, 28% Olefin | S |
| CD679A | Rope Cord | 32% Polyester, 47% Olefin, 11% Polypropylene, 10% Acrylic | S |
| CD679A | Loop Fringe | 32% Polyester 47% Olefin 11% Polypropylene 10% Acrylic | S |
| RST-679 | Button / Tassel Combination | 60% Polyester, 20% Rayon, 20% Acrylic | S |
| Sand | Dash Vinyl | Vinyl | Vinyl |
| Bistro - Sand | Euro Chair Leather | Leather | Leather |
| Bistro - Sand | J-Lounge Distressed Leather | Leather | Leather |
| Pearl 009 Natural | Windshield | 100% Polyester | W/S |

| COLOR/PATTERN | APPLICATION | CONTENT | CODE |
|---|---|---|---|
| **COGNAC .937** | | | |
| Penfield Nugget | Sofa, Window Boxes | 73% Rayon, 26% Polyester, 1% Nylon | S |
| Rambo Col 1 Clove | FSD Chairs | 35% Olefin, 36% Acrylic, 13% Polyester, 12% Spun Viscose, 4% Cotton | Dry Clean |
| Richmond Col 2 Currant | LR Pillows, LR & BR Valances | 42% Polyester, 34% Acrylic, 21% Spun Viscose, 3% Nylon | Dry Clean |
| Patt# Palma Color 63 | Bedspread | 100% Cotton | Dry Clean |
| Mahal -14 48214-A4LU Col. Rich (backed) | BR Pillows, Headboard | 100% Silk | Dry Clean |
| Pizzazz Mushroom | BR Accent Pillows, Headboard | 84% Rayon, 14% Polyester, 2% Silk | S |
| CD678A | Rope Cord | 10% Polypropylene, 41% Olefin, 27% Rayon, 5% Acrylic, 6% Polyester, 5% Cotton, 6% Acetate | S |
| FR678 | Loop Fringe | 7% Polypropylene, 45% Polyester, 22% Acrylic, 16% Rayon, 10% Cotton | S |
| RST-678 | Button / Tassel Combination | 32%, Polyester, 57% Rayon, 11% Polypropylene | S |
| Parchment | Dash Vinyl | Vinyl | Vinyl |
| New Mexico, col Prairie | Euro Leather Chair | Leather | Leather |
| New Mexico, col Prairie | J-Lounge Distressed Leather | Leather | Leather |
| Pearl 009 Natural | Windshield | 100% Polyester | W/S |

| | | | |
|---|---|---|---|
| **NAPA ONYX .938** | | | |
| Curly Lamb - W Col. Khaki (47" finished width) | Sofa | 66% Rayon, 33% Cotton, 1% Nylon | Dry Clean |
| Sejanus Color Charcoal | Window Boxing | 100% Cotton | S |
| Pattern M5669 Color Onyx | FSD Chairs | 57% Rayon, 43% Polyester | S |
| Pattern M6032 Color Onyx | LR Pillows, LR Valancaes | 51% Acrylic, 35% Polyester, 14% Cotton | S |
| Pattern 960077 Snazzy color 301 JE | Bedspread, Headboard | 48% Polyester, 18% Cotton, 34% Olefin | S |
| Atmosphere Ref-999 | BR Pillows, Headboard welt | 75% Rayon, 25% Polyester | S/W |
| Mikado - Noir | BR Accent Pillow | 87% Spun Viscose, 13% Bacron | S |
| CD690A | Rope Cord | 72% Polyester, 11% Rayon, 3% Acrylic | S |
| FR690 | Loop Fringe | 63% Polyester, 22% Acrylic, 15% Rayon | S |
| BU690 | Boullion Fringe | 72% Polyester, 11% Rayon, 3% Acrylic | S |
| RST690 | Button / Tassel Combination | 63% Polyester, 22% Acrylic, 15% Rayon | S |
| Sand | Dash Vinyl | Vinyl | Vinyl |
| Classic Rider - Fools Gold | Euro Chair Leather | Leather | Leather |
| Classic Rider - Fools Gold | J-Lounge Distressed Leather | Leather | Leather |

**LR** = Living Room **BR** = Bedroom **FSD** = Free Standing Dinette

Several areas of the motorhome, such as the dash, ceiling and items of furniture, may be covered in vinyl. The care and cleaning of these areas are outlined in the Morbern Vinyl section below.

**Morbern Vinyl:**

Vinyl requires periodic cleaning to maintain its neat appearance and to prevent the buildup of dirt and contaminants that may permanently stain and/or reduce the life of the vinyl if not removed. The frequency of cleaning depends upon the amount of use and the environmental conditions in which the vinyl is subjected. The procedures used for cleaning are dependent upon the end-use circumstances.



**Normal Cleaning:**

Most common stains can be cleaned using warm soapy water and clear water rinse. Moderate scrubbing with a medium bristle brush will help to loosen soil from the depression of embossed surfaces. For stubborn stains use the following commercially available mild detergents in accordance with the manufacturer's instructions: *Mr. Clean* or *Fantastik*.

Full strength rubbing alcohol or mineral spirits may be tried cautiously as a last resort on very stubborn stains if the above suggestions do not work.

Indiscriminate use of any solvent, or solvent containing cleaner, can severely damage or discolor the vinyl. Stains may become permanent if they are not removed immediately. The procedure for removal of the more severe staining agents are outlined below.

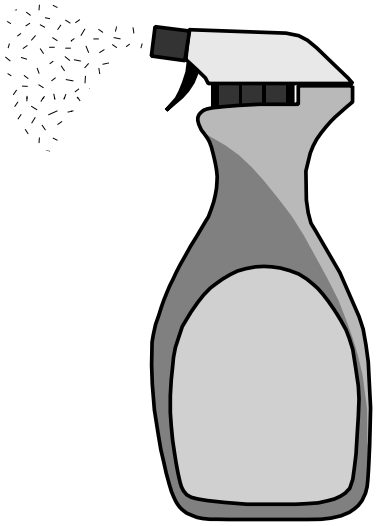

cleaner.eps

**NOTE: Detergents should never be used on a regular or repeated basis for normal cleaning.**

**CAUTION: Powdered cleaners containing abrasives, steel wool and industrial strength cleaners are not recommended for Morbern vinyl.**

**Bird Excreta & Vomit Stains:**

Sponge the area with soapy water containing a diluted bleach until the stain is removed. Rinse thoroughly with clean water.

**Urine Stains:**

Sponge with soapy water containing a small amount of household ammonia. Rinse thoroughly with clean water.

**Surface Mildew:**

Wash with diluted bleach and use a soft brush for stubborn growth. Rinse repeatedly with clear, cold water.

**Ballpoint Ink:**
Permanent Marker Ink spots will stain the vinyl permanently. Wipe the stain immediately with rubbing alcohol in a well ventilated area to remove much of the stain.

**Oil-Base Paint:**
Use turpentine in a well ventilated area to remove any fresh paint. Dried paint must be moistened using a semi-solid, gel-type stripper. The softened paint can be gently scraped away. Rinse with soap and water.

**CAUTION: Lacquer solvent will cause immediate irreparable damage to the vinyl. Do not use wax on any vinyl upholstery as it will cause premature embrittlement and cracking. Dilute chlorine bleach before using. Never use full strength bleach.**

**CAUTION: Paint strippers will remove the print pattern and damage the vinyl if it comes in direct contact.**

**WARNING: If flammable solvents such as alcohol, turpentine or varsol are used for cleaning, use only small quantities while in a well-ventilated area. Exercise proper caution by notifying any persons in the area. Keep away from any ignition source. Always wear protective gloves.**

**Latex Paint:**
Fresh paint can be wiped off with a damp cloth. Hot soapy water will normally remove dried latex.

**Tar or Asphalt:**
Remove immediately. Prolonged contact will result in a permanent stain. Use a cloth lightly dampened with mineral spirits and rub the stain gently, working from the outer edge of the stain toward the center to prevent spreading. Rinse with soap and water.

**Crayon, Mustard or Ketchup:**
Sponge with mild soap and water. For stubborn stains that may have set, use a cloth soaked in diluted mild detergent with gentle rubbing. Any remaining stain should be washed with diluted bleach. Rinse repeatedly with cold water.

**Chewing Gum:**
Scrape off as much gum as possible using a dull knife. Rub the gum with an ice cube to harden and make it easier to remove. In a well ventilated area, use a cloth saturated with mineral spirits and gently rub the remaining gum. Rinse thoroughly with clean water.

**Lipstick, Grease, Oil, Make-Up or Shoe Polish:**
Apply a small amount of mineral spirits with a cloth. Rub gently. Be careful not to spread the stain by smearing beyond the original source.
Remove shoe polish immediately as it contains a dye which will cause permanent staining. Rinse thoroughly with clean water.

**Candy, Ice Cream, Coffee, Tea, Fruit Stains, Liquor, Wine, Tanning Lotion or Soft Drinks:**
Use lukewarm water and sponge repeatedly. Any loose material should be gently scraped with a dull knife. Any soiled area that remains after drying should be gently rubbed with a cloth, dampened with a mild detergent solution. Rinse thoroughly with clean water.

**Blood or Plant Residue:**
Rub out any spots with a clean cloth soaked in cool water. If stubborn spots remain use household ammonia and rinse repeatedly with a clean, wet cloth. Do not use hot water or soap suds as this will set the stain.

**TIP: Vinyl requires periodic cleaning to maintain its appearance and to prevent the buildup of dirt and contaminants that may permanently stain or reduce the life of the vinyl if left untreated. Frequency of cleaning and procedures used depend upon the amount of use and the environmental conditions in which the vinyl is subjected. Tears or holes in the vinyl can be temporarily covered with clear "office" tape to prevent further damage. Repairs should be made by a professional upholstery shop. Commercial repair products may contain lacquers and cause the vinyl to become brittle and more difficult to repair.**

## *Leather*

**Spots & Spills:**
Absorb excess liquid immediately with a clean cloth or sponge. Use water only if necessary. Do not use a cleaning product. If water is used, clean the entire area where the spot occurred. An example would be the entire seat cushion or the entire arm. Allow to air dry. Do not dry the wet areas with hair dryers, etc.

**Stubborn Spots and Stains:**
Use lukewarm water and a mild soap to work up a thin layer of suds on a piece of cheesecloth. Scrub the surface. Rinse with a piece of clean, damp cheesecloth. Allow to air dry. Do not use saddle soap, cleaning solvents, furniture polish, oils, varnish, abrasive cleaners, soaps or ammonia water.

**NOTE: These are recommended or suggested methods of cleaning. The manufacturer is not responsible for damage incurred while cleaning. Always test the cleaning method in an inconspicuous area first before applying to the entire area.**

## *Ultrasuede®*

Ultrasuede® Fabric is easy to keep plush and beautiful for years. The fabric is virtually maintenance free, or "carefree" might be a better way to put it.

**Everyday Upkeep:**
Quick once-overs with a medium-bristle brush restores the nap and soft luster appearance of Ultrasuede®.

**Laundering/Dry Cleaning:**
Ultrasuede® by design is machine-washable. However, when combined with materials for lining that don't stand up to a washing machine, the fabric can be dry-cleaned except for one shade of clear white used in some garments. Check the manufacturer's care instructions for details.

**Stain Removal:**
Stains ranging from red wine to black coffee can be spot-cleaned with just a touch of mild soap and water. Tougher stains may require mild cleaning fluid or solutions, which are available at most hardware and drug stores.

| TYPE OF STAIN | MILD DETERGENT | MILD CLEANING FLUID |
|---|---|---|
| Coffee, Tea | * | |
| Red Wine, Liquor | * | |
| Soft Drinks | * | |
| Milk | * | |
| Ketchup | * | |
| Steak Sauce, Soup Sauce | * | |
| Mayonnaise, Butter | * | * |
| Salad Oil | * | * |
| Chocolate | * | * |
| Cosmetic Foundation | * | * |
| Lipstick | * | * |
| Face Cream | * | * |
| Suntan Oil/Lotion | * | * |
| Shoe Polish | * | * |
| Machine Oil | * | * |

**Care Instructions:**

- Spot clean with mild soap and water
- Air dry or dry quickly with warm setting of a hair dryer.
- For stubborn stains, use mild solvent.
- For tougher stains, try *Fantastik*® brand spray cleaner.
- Disinfect with a **5:1 NON- CHLORINATED** (only) bleach solution.
- Dry clean using commercial dry cleaning solvents only.
- Use a mild detergent for:
  - Red Wine, Liquor - Coffee, Tea, Cola - Milk
  - Ketchup, Mustard, Mayonnaise - Steak Sauce, Soy Sauce
  - Butter, Salad Oil - Chocolate - Lipstick, Make-up, Face Cream
  - Suntan Oil - Machine Oil - Urine, Blood



**Removing ballpoint pen stains:**

Wipe the stain off with ethanol (ethyl alcohol). If the stain cannot be removed with ethanol, use the following procedure. Proceed with caution when using toxic chemical.

1. Prepare bleach. Dilute household bleach (sodium hypochloride) with the same amount of water.
2. Place a piece of tissue and apply the solution prepared by step 1 (do not apply too much). Cover it with polyethylene film to prevent the solution from drying.
3. Remove the tissues occasionally to check on the condition of the stain. When the stain is almost gone, remove the tissues completely. Do not leave on for more than one hour.
4. Wash the stain with sufficient amount of water.

**If there is residue of bleach, polyurethane resin and back cloth will deteriorate. Neutralize it by the following method:**

- Place a piece of tissue, as in step 2, and apply hydrogen peroxide solution (15%).
- Leave the solution on for approximately 30 minutes, then remove the tissue.
- Completely remove the residue of hydrogen peroxide on the Ultra-leather with water.

Sodium hypochloride is the only chemical that will remove ballpoint pen stains. However, this chemical may cause polyurethane to yellow or the back cloth to deteriorate. It is recommended to remove ballpoint pen stains as early as possible with ethanol.

**For more information, please call: Ultrafabrics, LLC**
**Customer Service: 1-877-309-6648**

## FLOORS - *Carpet Cleaning*

| Use the solution specified in order from 1-8 until stain is removed. | A DRY CLEANING FLUID | B NAIL POLISH REMOVER | C DETERGENT SOLUTION | D WARM WATER | E VINEGAR SOLUTION | F AMMONIA SOLUTION | G SPOT REMOVAL KIT | H CALL PROFESSIONAL | I PERMANENT CHANGE |
|---|---|---|---|---|---|---|---|---|---|
| **SPOTS** | | | | | | | | | |
| Acid | | | | 2 | | 1 | | 3 | * |
| Acne Medication | | 1 | | 2 | 5 | 4 | 3 | 6 | * |
| Alcoholic Beverage | | | 1 | 4 | 3 | 2 | | | * |
| Ammonia | | | | 2 | 1 | | | | * |
| Bleach | | 1 | 2 | | | | | 3 | * |
| Blood | | 1 | 3 | | 2 | 4 | | | |
| Candle Wax | 1 | | | | | 2 | | | |
| Cement & Glue | 2 | 1 | 3 | | 5 | 4 | 6 | | * |
| Chalk | | 1 | 2 | | | | | | |
| Charcoal | | 1 | 2 | | | | | | |
| Chewing Gum | 1 | | | | | | | | |
| Coffee | | | 1 | 3 | 2 | | 4 | 5 | * |
| Cosmetics | | 2 | 1 | 3 | 6 | 5 | 4 | 7 | * |
| Crayon | 1 | | 2 | 3 | | | | | |
| Drain/Toilet Cleaner | | | 2 | 1 | 3 | | | 4 | * |
| Dye | 1 | | 2 | | 4 | 3 | 5 | 6 | * |
| Food | | | 1 | 4 | 3 | 2 | 5 | 6 | * |
| Fungicides, Insecticides, Pesticides | 1 | | 2 | 5 | 4 | 3 | 6 | * | |
| Furniture Polish (Water Based) | | | 1 | 4 | 3 | 2 | 5 | 6 | * |
| Furniture Polish (Solvent Based) | 2 | 1 | 3 | 6 | 5 | 4 | 7 | 8 | * |
| Furniture Stain | 2 | 1 | 3 | 6 | 5 | 4 | 7 | 8 | * |
| Graphite | | 1 | 2 | | | | | | |
| Grease | 1 | 2 | 3 | | | | 4 | 5 | * |
| Ink | 2 | 1 | 3 | 6 | 5 | 4 | 7 | 8 | * |
| Iodine | 1 | | 2 | 5 | 4 | 3 | 6 | 7 | * |
| Lipstick | 2 | 1 | 3 | 6 | 5 | 4 | 7 | 8 | * |
| Medicine | 2 | 1 | 3 | 6 | 5 | 4 | 7 | 8 | * |
| Merthiolate | | | 1 | 4 | 3 | 2 | 5 | 6 | * |
| Nail Polish | 2 | 1 | 3 | | | | 4 | 5 | * |
| Oil | 1 | | 2 | 4 | | 3 | | 5 | * |
| Paint | 2 | 1 | 3 | | | | 4 | 5 | * |
| Plant Food | | | 1 | 4 | 3 | 2 | 5 | 6 | * |
| Rust | | | 2 | 3 | 1 | | 4 | 5 | * |
| Shoe Polish | 2 | 1 | 3 | 5 | | 4 | 6 | 7 | * |
| Soft Drinks | | | 1 | 4 | 3 | 2 | 5 | 6 | * |
| Soot | 1 | | 2 | 3 | | | | 4 | * |
| Tar | 1 | | | | | | 2 | 3 | * |
| Toothpaste | | | 1 | | | | | | |
| Urine | | | 1 | | 2 | | 3 | 4 | * |
| Vomit | | | 1 | 4 | 3 | 2 | 5 | 6 | * |

* While recommended cleaning agents are effective, some stains may become permanent.

**Spot Removal Procedures:**

- Act quickly when anything is dropped or spilled. Remove spots before they dry.
- Blot liquids with a clean, white absorbent cloth or paper towel.
- For semi-solids, scoop up with a rounded spoon.
- For solids, break up and vacuum out as much as possible.
- Pretest the spot removal agent in an inconspicuous area to make certain it will not damage the carpet dyes.
- Apply a small amount of the cleaning solution recommended for the particular spot. Do not scrub. Work from the edges of the spot to the center. Blot thoroughly. Repeat until spot is removed.
- Follow steps on the Carpet Spot Removal Guide.
- After each application, absorb as much as possible before proceeding to the next step.
- Absorb remaining moisture with layers of white paper towels, weighted down with a non-staining glass or ceramic object.
- When completely dry, vacuum or brush the pile to restore texture.
- If the spot is not completely removed, contact a professional carpet cleaner.

**Cleaning Solutions:**

**A. Dry Cleaning Fluid**: A nonflammable spot removal liquid, available in grocery and hardware stores.

**B. Nail Polish Remover:** Any acetate, which often has a banana fragrance. Do not use if it contains acetone.

**C. Detergent Solution:** Mix two cups of cold water and 1/8 teaspoon mild liquid detergent (no lanolin, non-bleach).

**D. Warm Water:** Lukewarm tap water.

**E. Vinegar Solution:** One cup white vinegar to one cup water.

**F. Ammonia Solution:** One tablespoon household ammonia to one cup water.

**G. Kit - Spot Removal:** Available from retail carpet stores or professional cleaners.

**H. Call Professional:** Additional suggestions, special cleaning chemicals or the ability to patch the area might be available.

**I. Permanent Change:** Due to the nature of the stain, there may be color loss. The carpet has been permanently dyed or the carpet yarns have been permanently damaged.

**NOTE: While the recommended cleaning agents have proven to be effective, some stains may become permanent.**



## *Tile Floors*

Tile floors vary in porosity and surface irregularities. This can make it difficult to protect and maintain. Regular maintenance is important to keep the tile in the motorhome looking showroom new. Once the slide-out has been extended, keep the tile floor clean to prevent dirt from scratching the tiles prior to retracting the slide-out.

**NOTE: Tile is ceramic and will chip and break easily. Avoid dropping heavy or sharp objects on the tile.**

**Cleaning Tile:**

Use a damp sponge mop or a cloth to clean tile and maintain its luster. If moderate staining occurs, cleaning with a window cleaner such as Windex should do the job. A mild solution of hot water and all-purpose cleaner for tile floors, walls and countertops can also be used. Rinse well with clear water and dry with a soft cloth to prevent streaking. Avoid cleaning tile with soap. Soap forms a film to dull the luster. Soap also promotes the growth of mildew and bacteria. Do not use powdered cleaners on unglazed tile floors. Undissolved powder will dull the surface. Grout sealers are available that protect the porous surfaces. If a sealer is used, follow the sealant manufacturer guideline for application. Never use sealers on unglazed tile. With the exception of terra cotta, which may be oiled or waxed, tile does not need to be polished or buffed to maintain its finish.

**Grout:**

The grout used is a two part concrete mix. It is normal for this type of grout to develop surface cracks over time. In motorhome application, due to the constant flexing of the flooring, this process may accelerate. If the grout requires cleaning, scrub with a plastic brush. Do not use steel wool as small particles may remain and produce unsightly stains.

**NOTE: Before using any solution to clean the tile, check the manufacturer's warning label to ensure the safety of the product. If there is any doubt, apply several test patches of the solution in an inconspicuous place to determine the product's suitability.**

**Sealing the Tile:**

Apply sealant to the tile floor and grout to maintain the quality of finish and to prevent discoloring of the grout from soils and spills. One pint of 511 Sealant is provided and a sufficient quantity to seal the floor. Clean and dry the floor surface before the sealant is applied. After application, the floor will be ready for careful use after five hours. The sealant requires 72 hours to cure completely.

**NOTE: It is recommended to first test using a small amount of sealant on an inconspicuous area. Avoid getting sealant onto surfaces other than the flooring.**

**To Apply:**

1. Extend slide room(s) and clean floor. Allow floor and grout to thoroughly dry.
2. Working from rear towards doorway, apply sealant direct from container onto a cloth towel or broom handle applicator. Grout sealant applicators are available at large hardware stores.
3. Apply only enough sealant to wet surface. Do not allow sealant to puddle in grout lines. Extra care should be used to make sure all grout has been sealed. Only one application is necessary.
4. Allow five hours to dry. Sealant will fully cure in 72 hours.

070182

**NOTE: If a spill occurs before sealant has cured, it may be necessary to clean and retreat area with sealant as needed.**

**CAUTION: Product contains petroleum distillates. Open windows, vents and doors to provide adequate airflow during application.**

## SHOWER

Showers are susceptible to soap build up. Showers should be cleaned weekly to prevent burdensome clean-up. Using the same solution used to clean tile floors will be sufficient for the shower. However, to control mildew growth, spray the shower with household chlorine bleach and allow it to stand for five minutes. Clean the glass shower doors with window cleaner on a weekly basis to maintain the shine. If water spots cannot be removed from the glass, rub lightly with the flat edge of a razor blade to remove deposits.

To prevent excessive moisture and a continual growth of mildew, use the shower only with adequate ventilation. The sealant in a regularly used shower should be replaced once a year. To replace sealant, remove the old sealant using a sharp non-metallic instrument. Apply a new sealant, which can be found at most recreational vehicle supply stores.

## CEILING

The ceiling of the motorhome can be a variety of materials or fabrics, many of which require little or no care or maintenance.

**Vinyl:**

The soft touch padded vinyl ceiling can be cleaned using the procedures discussed in the vinyl article of this section. Generally, a mild soap and water is sufficient for cleaning vinyl.

**NOTE: Use care not to puncture the padded vinyl.**

**Hardwood Vinyl and Decorated Paneling:**

Hardwood vinyl and decorated paneling are sensitive and demanding materials. Certain cleaning agents will affect the surface on both printed and unprinted vinyl. Use only a mild, non-abrasive detergent and warm water with a soft cloth or sponge for cleaning to protect the material.

Under no circumstance should bleach, alcohol, oil-based spray cleaners or cleaning agents with solvents, citrus oil or harsh chemicals be used. Other liquid spray cleaners may also cause damage to the material.

### *Ceiling Mirror*

The non-distorted mirror reflective qualities make A-Look Decorative Metals perfect for ceilings. The A-Look Decorative Metals present a unique accent where a special mood or effect is desired. The surface of Decorative Metals is that of fine finished metal, where special eye-catching properties add a definite prestigious appeal.

**Cleaning:**

Household cleaners, ammoniated detergents or glass cleaners may be used on the A-Look Mirror Decorative Metals. When cleaning A-Look Decorative Metals, use only a soft cloth and normal glass cleaners.

## WALL COVERINGS

Time is very important when removing substance from wall coverings that are solvent based or contain color. Do not use abrasive cleaners containing chlorine bleach or solvents. *Fidelity* and *Jolie* brands are recommended. Always begin with a mild detergent or soap and warm water. To remove normal dirt clean with a soft sponge. Rinse and wipe dry.

**Care for the Tower Wall Covering:**

Remove ordinary stains with mild soap and warm water. Sponge on. Rinse well and dry with a soft cloth. **For special cleaning problems:** To remove ball point pen, blood, lipstick, etc., use a sponge or soft bristle brush and *Formula 409*, *Fantastik* or a similar product. Rinse well and dry. Finish cleaning by applying full strength isopropyl alcohol with a sponge or soft brush. Rinse well and dry.

**Care for the Satinesque Wall Covering:**

Stains should be removed as quickly as possible to minimize reaction between the staining agent and wall covering. Time is very important when removing substances that are solvent based or contain color. Examples: nail polish, oil, shampoo, lacquer, enamel, paint, ink and lipstick.

Always begin cleaning with a mild detergent such as soap. If necessary, move to a stronger cleaner such as household bleach, liquid household cleaners or rubbing alcohol. Before using one of the stronger cleaners, test the cleaning agent on a small inconspicuous portion of the wallcovering to make sure that the cleaner does not affect the color or gloss of the wall covering.

**Stain Removal Procedures for Specific Stain Types:**

**Normal Dirt:**

Remove normal dirt using a mild soap or detergent and warm water. Allow it to soak for a few minutes then rub briskly with a cloth or sponge.

**Nail Polish, Shellac or Lacquer:**

Remove liquid using a dry cloth. Use care not to spread the stain. Quickly clean the remaining stain with rubbing alcohol. Rinse with clean water.

**Ink:**

Remove immediately by wiping with a cloth dampened in rubbing alcohol. Rinse with clean water.

**Chewing Gum:**

Rub with an ice cube to cool and harden. Gently pull off the bulk of the gum. Remove remaining gum with rubbing alcohol.

**Pencil:**

Erase as much of the pencil mark as possible. Wipe remaining marks with rubbing alcohol.

**Blood, Feces or Urine:**

Remove these staining substances as quickly as possible. Wash the stained area with a strong soap. If the stain does not disappear, rinse the soapy area thoroughly with clean water. Mix a solution of 50% water and 50% household bleach. Clean the stained area with the bleach solution. Rinse with clean water.

## WOOD CARE

Wood should be treated the same as a piece of fine furniture. Care and cleaning of the wood surface is essential in maintaining the natural beauty of wood. Keep in mind that wood finishes can vary widely. Test a new cleaning solution in an inconspicuous area to check for possible damage.

The care and cleaning of the solid wood surfaces and the wood products used in the motorhome depends on individual choices and preferences. Numerous waxes, polishes and finishing products are available for use. Always follow the manufacturer's label and instructions. The solid wood surfaces should be cleaned weekly. Dust regularly with a soft, lint-free cloth. Dampen the cloth slightly with water. Wipe one small area at a time and dry immediately.

For stubborn stains, use a clean cloth dampened with a solution of mild, non-alkaline soap (like dishwashing liquid) and water. Dry thoroughly using a soft cloth. Buff lightly, following the direction of the grain. Never use abrasive cleaners, scouring pads or powdered cleansers.

Excessive dampness, dryness, heat, or cold can damage solid wood finishes. Sunlight can change the color or age the wood. Never allow moisture or spills to stand, always blot dry immediately. Solvents, alcohol, nail polish and polish removers, as well as harsh cleaners should not be used on finished wood surfaces.

Minor damage to solid wood surfaces can be repaired quickly and effectively with a bit of hard work, some careful attention to details, and most importantly, the right materials. However, any wood repair or finishing job is best left for a professionally trained individual.

**NOTE: It is important to inform the service technician of any products used for the care and cleaning in the event of wood repairs.**

**Sanding and Sandpaper:**

The following table is a general guide to the proper uses, although this may vary from wood type to type. The key to sanding is using the right sandpaper for the repair that is needed. Always sand with the grain.

| GRIT | Common | Common |
|---|---|---|
| 80-120 | Medium | Smoothing the surface, removing small marks. |
| 150-180 | Fine | Final sanding prior to finishing. |
| 220-240 | Very Fine | Sanding between coats of sealing. |
| 280-320 | Extra Fine | Removing dust spots or mark between finish coats. |
| 360-600 | Super Fine | Sanding finish to remove luster or surface blemishes. |

**Steel Wool:**

Abrasive material composed of long steel fibers of varying degrees of fineness that are matted together. The coarser grades are used to remove paint and other finishes; the finer grades for polishing or smoothing a finished surface.

**Nail Holes and Small Cracks:**

Fill nail holes and small cracks with wood putty or dough for unstained woods prior to any sanding. Stained finishes require filling holes and cracks after the stain has been applied. Putty should match the stain closely in color.

**NOTE: A little sawdust and wood glue can be used to make putty for end grains.**

**Fixing scratches in stained woodwork:**

"Quick and simple" rarely describes repairs to stained wood finishes. However, a few tricks can be tried. When scratches appear lighter than the surrounding dark-stained woodwork, it usually means either that the scratch goes through the stain into the wood or that the varnish is flaking off.

**Dents:**

Dents are the result of wood fibers being crushed and compressed. Dents can be raised back to original level by steam. To raise a dent, place a damp cloth over the dent and hold a medium-hot iron on it. The steam will cause the wood fibers to swell back into place. It may be necessary to repeat this process until the dented area is level with the surface. Allow the area to dry.

**Restoring the clear finish:**

Check the scratches carefully. If flaking varnish is visible with dark-stained wood underneath, only the clear finish may need to be restored. Rub the loose varnish with fine steel wool or fine synthetic steel wool until you have removed the flaking varnish and slightly roughened a small area of the finish surrounding the scratch. With the tip of a rag, a small brush, or even a cotton swab, apply a thin coat of a wipe-on finish. Apply finish to the damaged area only. Several coats may be needed to hide the scratch.

**Re-staining the wood:**

If bare wood is visible at the bottom of the scratch, the wood will need to be re-stained. To remove damaged varnish, lightly roughen a small area around the scratch with sandpaper, steel wool or synthetic steel wool. Find a stain that is a shade lighter than the wood finish. Stain the bare wood with a very small amount of stain on a rag, brush or cotton swab. If the color is too light, apply several coats. Rub away excess stain with a dry rag. If the wood becomes too dark, use a rag moistened in mineral sprits to lighten the wood. Select a lighter color stain and continue.

Several companies have simplified this repair process by putting oil-based wood stain into marker-like containers. Just rub the stain marker on the scratch. Start with a stain color that is lighter than the original finish, because torn and scratched wood fibers will absorb stain and darken quickly. A second coat can always be applied if the color of the first coat is too light. Once the color is blended, patch the clear finish as described above and apply a wipe-on finish.

**Scratches and Nicks:**

Several professional woodworkers use similar procedures and tricks when it comes to scratches and nicks, most of which can be easily repaired. Always test an inconspicuous area of the wood prior to repairs to ensure no damages to the finish.

Light scratches will often disappear when carefully rubbed with furniture polish or paste wax. Deeper scratches can be hidden by carefully rubbing with a piece of oily nutmeat such as Brazil nut, black walnut or pecan. Be careful to rub the nutmeat directly into the scratch to avoid darkening of the surrounding wood. Color the scratch with brown coloring crayon or liquid shoe dye (especially good on walnut).

Staining the scratch with iodine:
Mahogany - Use new iodine.
Brown or Cherry Mahogany - Use iodine that has turned dark brown.
Maple -Dilute one part iodine with one part denatured alcohol.

Commercial scratch removers, or stick wax to match the wood finish, can also be used. After the scratch has been hidden, polish or wax the entire area. Deep scratches should be repaired and finished by a professional.

## COUNTERTOPS
### *- Solid Surface*

The Solid Surface was created for a lifetime of easy care. Just follow the simple guidelines listed here to the keep countertop surface looking nice.

**Routine Care:**

The motorhome countertops are finished with one type of finish: matte/satin. All solid surface sinks and bowls have a matte/satin finish. Soapy water or ammonia-based cleaners will remove most dirt and stains from all tops and bowls. However, slightly different techniques must be used to remove different stains. Follow the recommendations below.

**Cleaning the Countertops:**

- Most dirt and stains: Use soapy water or ammonia-based cleaner.
- Water marks: Wipe with damp cloth and towel dry.
- Difficult stains: Use soft scrub and a Grey *Scotchbrite* Pad.
- Disinfecting: Occasionally wipe surface with diluted household bleach (one part water and one part bleach).

**Cleaning the Solid Surfaces Sink:**

Occasionally clean by using *Soft Scrub Liquid Cleanser* and a Grey *Scotchbrite* pad. Scrub the sink, rinse and towel dry. Do this as often as necessary.

**Removing Cuts and Scratches:**

Because the beauty of the surface goes all the way through the Solid Surface, countertops are completely renewable. Use the following instructions to remove minor cuts and scratches.

- Sand with 180 grit and then 320 grit sandpaper until the scratch is gone.
- Restore the finish using a Grey *Scotchbrite* pad. Never sand hard in one small area. Feather out lightly to blend restoration.



**Preventing Heat Damage:**

The Solid Surface withstands heat better than ordinary surface materials; however, hot pans and some heat-generating appliances, such as frying pans or crockpots, can damage the surface. To prevent heat damage always use a hot pad or a trivet with rubber feet to protect the surface. In most cases the surface can be repaired if it is accidentally damaged.

**Other Important Tips:**

Avoid using strong chemicals on the Solid Surface such as paint removers or oven cleaners. If these chemicals come in contact with the Solid Surface, quickly wash with water. Avoid contact with nail polish or nail polish remover. If contact is made, quickly wash with water.

**NOTE: Do not cut directly on the solid surface. Always run cold water into the Solid Surface sink when pouring boiling water into the sink.**

## WINDOWS

**Water Spots:**

Any glass will develop water spots if not cleaned properly. A spotting effect is magnified when the glass has a reflective finish. Use a squeegee immediately after washing to reduce water spotting. To remove stubborn water stains from reflective glass we recommend *Cerium Oxide Polishing Compound*, made by C.R. Lawrence, available at most glass shops.

## *Condensation*

Condensation is a natural phenomenon. The amount of condensation will vary with climate conditions, particularly in relative humidity. Condensation occurs from water vapor present in the air. Each of us add more vapors by breathing, bathing, cooking, etc. Water vapor collects wherever there is available air space. When the temperature reaches the dew point the water vapor in the air condenses and changes to liquid form.

**Controlling Moisture Condensation:**

Reduce or eliminate interior moisture condensation during cold weather by using the following steps:

- Partially open the roof vents and windows so that outside air can circulate into the interior. Increase the ventilation when large numbers of people are in the motorhome. Even in raining or snowing conditions the air outside will be far drier than the interior air.
- Install a dehumidifier. Continuous use of a dehumidifier is effective in removing excess moisture from the interior air. Using a dehumidifier is not a cure-all, however, it will reduce the amount of outside air needed for ventilation.
- Run the range vent fan when cooking and the bath vent fan (or open the bath vent) when bathing, to reduce water vapor. Avoid excessive boiling or use of hot water as it produces steam.
- Do not heat the motorhome interior with the range or oven. Heating with the range or oven increases the risk of toxic fumes and allows oxygen depletion. Also, open flames add moisture to the interior air increasing condensation.
- In very cold weather leave the cabinet and closet doors partially open. The air flow will warm and ventilate the interior of the storage compartments and the exterior wall surface, reducing or eliminating condensation and preventing the possibility of ice formations.

## WINDOW TREATMENTS
### *- Mini blinds*

- **Dusting:**
  Regular dusting maintains the appearance of most blinds. Keep the aluminum blind looking its best by periodically wiping them with a soft cloth or a dusting mitt. By tilting the slats down, but not quite closed, you'll be able to clean most of the top surface of each slat. Blinds may be cleaned while hanging in place using this method.

- **Vacuuming:**
  For deeper cleaning, vacuum gently with brush attachment of any vacuum cleaner.

- **Compressed Air or Hair Dryer (non-heat setting):**
  Blow dust off each slat. Dust will be air-borne using this method so ventilate the motorhome.

- **Spot-Cleaning:**
  Spot-clean shades and blinds using a soft cloth or a moistened sponge with lukewarm water. Add mild detergent, if needed. Blot gently to avoid creasing. In a dusty environment, the blinds may need to be cleaned regularly using a sponge or dampened soft cloth. Use warm (not hot) water and a mild detergent. The mild detergent cannot contain abrasives. Rinse the blinds using a clean cloth and water to prevent water spots. Place a towel directly under the blinds to absorb any water that might drip down.

- **Ultrasonic cleaning:**
  Professional ultrasonic cleaning may be prefered.

- **Tub cleaning:**
  1. Immerse entire shade assembly in lukewarm water with mild detergent. Wash for several minutes by gently moving liquid around with your fingers.
  2. Rinse with clear water.
  3. Close shade before removing from rinse water.
  4. Hold rails and tilt the shade to allow excess water to drain off.
  5. Re-install damp shade into window opening. Place a towel directly under the blinds to absorb any water that might drip down.
  6. Lower shade all the way to allow it to dry completely.



## Day/Night Shades

The day/night shades are made of polyester blended material. Use the following guidelines to care and maintain the day/night shades:

- Leave Day-Night shades in the **UP** position when not in use to help the shades hold their shape.
- String tension for the shades should be equal. The tension can be adjusted if the shades will not remain up.

**Dusting:**
Vacuum with a brush attachment, or use a dusting tool, on a regular basis.

**Cleaning:**
A dry foam cleaner may be used for soil and dirt removal. Follow all directions on the container or a cleaning solution of ¼ ounce clear liquid soap to 8 ounces water.

**NOTE: Do not use colored liquid soap as a stain may appear when fabric dries.**

## MOLD & MILDEW

**What is Mold?**

Mold is a plant belonging to the Fungi group. In short, mold is a type of fungus that occurs naturally in the environment, and is necessary for the natural decomposition of plant and other organic material. Mold spreads by means of microscopic spores borne on the wind, and is found everywhere life can be supported. Due to the fact mold spores are present in all types of environments, motorhome construction is not, and cannot be, designed to exclude mold spores. If the growing conditions are right, mold can grow in the motorhome. Most people are familiar with mold growth in the form of bread mold, and mold that may grow on bathroom tile. Mold spores, as they grow, can leave a musty odor, discolor fabric, and stain surfaces as well as cause considerable damage.

**What Does Mold Need to Grow?**

Being a plant, mold will need a food source in order to grow. Mold can use a variety of organic materials such as fabric, carpet, wallpaper, or even building materials, such as wood and insulation, to name a few. Grease films contain many nutrients for mold spores to grow when moisture and temperatures are right. Soil on dirty items such as fabrics and furniture may supply enough nutrients for mold to grow. Many of the synthetic fabrics such as acetate, polyester, acrylic and nylon are mildew resistant. However, soil on these fabrics may supply the nutrients to start mold growth.

Mold growth requires a temperate climate. The best growth occurs at temperatures between 40º F and 100º F. Finally, mold growth requires moisture. Moisture is a mold growth factor that can be controlled. By minimizing moisture inside the motorhome, mold growth can be reduced or eliminated.

Moisture in a motorhome can have many causes. Spills, leaks, overflows, condensation, and high humidity, to name a few. Good housekeeping and regular maintenance are essential in the effort to prevent or eliminate mold growth. If moisture is allowed to remain on a growth medium, mold can develop within 24 to 48 hours.

**Consequences of Mold:**

All mold is not necessarily harmful, but certain strains of mold have been shown to cause, in susceptible persons, allergic reactions, including skin irritation, watery eyes, runny noise, coughing, sneezing, congestion, sore throat and headache. Individuals with suppressed immune systems may risk infections. Some experts contend that mold causes serious symptoms and disease which may even be life threatening. However, experts disagree about the level of mold exposure that may cause health problems, and about the exact nature and extent of the health problems that may be caused by mold. Moreover, the Center for Disease Control states that a casual link between the presence of toxic mold and serious health conditions has not been proven.

Standards or threshold limit values for concentration of mold or mold spores have not been set. Currently, there are no EPA regulations or standards for airborne mold contaminants. There is simply no practical way to eliminate all mold and mold spores in the indoor environment. For example, studies have shown that ozone cleaners are not effective at killing airborne mold or surface mold contamination.

**Controlling Mold Growth:**

The owner can, and should, reduce or eliminate the occurrence of mold growth in the motorhome; thereby, minimizing any possible adverse effects that may be caused by mold. Taking the following steps can help reduce or eliminate mold growth in the motorhome.

1. Check for signs of mold prior to bringing items in the motorhome. Potted plants (roots and soil), furnishings, or stored clothing and bedding material, as well as many other household goods, may already contain mold growth.
2. Regular vacuuming and cleaning will help reduce mold levels. Mild bleach solutions and most tile cleaners are effective in eliminating or preventing mold growth.
3. Indoor humidity can be reduced by 30-60% when venting clothes dryers to the outdoors. Ventilate the kitchen and bathroom by opening the windows, by using exhaust fans, or a combination of both. Operating the air conditioning will remove excess moisture in the air, and help facilitate evaporation of water from wet surfaces.
4. Promptly clean up spills, condensation and other sources of moisture. Thoroughly dry any wet surfaces or material. Do not let water pool or stand in the motorhome. Promptly replace any materials that cannot be thoroughly dried.
5. **Inspect** for leaks on a regular basis. Look for discolorations or wet spots. Repair leaks promptly. Inspect condensation pans (refrigerators and air conditions) for mold growth. Take notice of musty odors, and any visible signs of mold.
6. Should mold develop, thoroughly clean the affected area with a mild solution of bleach. First, test to see if the affected material or surface is color safe. Should mold growth be severe, call on the services of a qualified professional cleaner.
7. If materials with mold on them cannot be cleaned, they should be removed and properly disposed.

Whether or not a motorhome owner experiences mold growth depends largely on how the motorhome is managed and maintained. As a manufacturer, our responsibility is limited to things that we can control. As explained in the written warranty, we will repair or replace defects in the construction (defects defined as a failure to comply with reasonable standards of motorhome construction) for the Limited Warranty coverage period provided. **THE MANUFACTURER WILL NOT BE RESPONSIBLE FOR ANY DAMAGES CAUSED BY MOLD THAT MAY BE THE CONSEQUENCE OF OR ASSOCIATED WITH DEFECTS IN THE CONSTRUCTION.**

## PEST CONTROL

Pests can come in all sizes and shapes, from insects to mammal. Regardless of the area one lives in or travels to, it is safe in stating there will be pests waiting. These pests are not only annoying; they can pose a health risk and create serious damage to the motorhome. There are a number of host-transmitted diseases that can be carried by a pest.

- Common pests include insects such as ants, cockroaches, termites, flies, pantry pests and wasps as well as wildlife such as rodents, raccoons, bats, birds and snakes. It is important to remember, pests are the same as humans in the fact they need food, water and a place to live. Eliminating any one of those elements will help significantly in controlling the pest.

To control pest infestation, eliminate those factors that attract pests, and take immediate steps to remove pests as soon as their presence is detected. There are a number of steps that can be taken to help in controlling pests:

- Reduce the clutter inside the motorhome and storage bays. All storage items, particularly food (including pet food), should be kept in tightly sealed containers. Seal all cracks and holes, and insure that window, door and vent screens are securely in place.
- Routinely clean the motorhome, including storage bays. Wipe down the water bay. Promptly remove all crumbs from areas where food is regularly prepared and eaten. Garbage should be placed in a sealed container and removed to an outside receptacle daily. Only put out pet food that will be immediately eaten.
- Keep foods such as flour, cereal, spaghetti and pet food in re-sealable containers with tight lids.
- Sweep and vacuum often (especially in eating areas) to help eliminate food sources for some pests.

- Seal cracks, crevices, and other gaps especially around doors and windows. Make sure all windows and doors are screened and fit the screens snug in their frames.
- Many pests need moisture to successfully live and reproduce. Limit their access to water or moisture sources by sealing any cracks and leaks in pipes and faucets. Reduce moisture in the motorhome by controlling condensation, immediately wiping up spills and promptly repairing leaks. Be extra alert around areas that attract rodents and insects, including the sewer hose, fresh water hose, bay doors and items that may be leaning against the outside of the motorhome, such as fishing poles and golf clubs.
- When the motorhome is stored outdoors, clear the surrounding area of all rodent friendly hiding places - shrubs, trees and clutter. Completely seal the underside of the motorhome. Wire mesh will work well to prevent points of entry, but beware of blocking necessary air vents. Prior to operating the motorhome after storage, remove all insect and animal nests that may have developed around vents, engine compartments, the exhaust pipe and in the wheel wells.



**Rodents**

Rodents may chew through wires or build nests in components of the motorhome. Signs of rodent infestation include droppings, shredded material or chewed furniture fabrics and vinyl. Rodents like to build nests with wire insulation, and are commonly attracted to the outside coating of 110 wiring more than 12 Volt wiring.

**NOTE: Although the back cap of the motorhomes is well sealed, rodents are capable of chewing through the foam insulation and that area should be routinely inspected.**

If there are signs of rodent infestation around the motorhome, place traps or poisons in suspected areas. Keep the traps and poisons safely away from pets and children. Cheese is not the best bait for a rodent trap. Use peanut butter or chocolate in small amounts. Place the bait on the trigger of the trap to induce the rodent to climb onto the trigger to reach the bait. Rodents do not limit invasion to unused vehicles.

**Insects:**

Eliminate insects the moment a sign of infestation is spotted. If you are unable to identify the type of insect, purchase some sticky traps from the hardware store and place the tape where you have seen the insects. Once caught, seek assistance in identifying the insect and determining what will be required to remove the infestation.

Regularly inspect the exterior of the motorhome for signs of a budding wasp nest, and promptly destroy small nests before they become too large.

Spiders can be in any structure. Since they are predators and feed on living prey, this would indicate other smaller pests may be found. Immediately remove spider webs. Some types of spiders like to nest on top of the diesel tank and around the diesel hoses. Dispense of spiders using a vacuum. Use care to capture the spider and egg sacs. Throw the vacuum bag away in a sealed bag.

Fruit flies invade the motorhome by attaching themselves to fresh fruits and vegetables. Determine what food items are generating the flies and discard that item in an outdoor trash receptacle. Any remaining fruit flies can be eliminated with a homemade trap. Pour a few ounces of vinegar into a cup and cover the cup with plastic wrap. Secure the wrap with tape or a rubber band and poke a ¼" hole in the plastic. Place the trap in the area where fruit flies are present.

Ants live in colonies. Only a fraction of the ant colony will leave to seek food. Spraying pesticides will only kill the ants that are away from the colony. To eliminate all ants, the colony must be destroyed. Keep ants away from the sewer hose by spraying the hose ends with a soap and water solution.

Fleas can be removed by properly treating pets with a veterinarian-approved treatment and a thorough cleaning of the motorhome. Vacuum vinyl areas and tile floors to remove dust, flea larva and flea eggs. Follow by thoroughly washing those areas with soap and water. Carpets must be vacuumed and treated with a residual flea control product labeled safe for indoor carpet and furniture use. Perform the cleaning treatment daily for three days to ensure that all fleas have encountered the treatment.

Flying outdoor insects are attracted to bright light. Yellow porch light covers on the motorhome work to discourage insect invasion. During nighttime hours insects will be attracted to docking lights, or other bright exterior lighting.

If the presence of moths is detected inside of the motorhome, usually by holes appearing in material, clean the affected clothing and all other items stored in the same area. Follow by completely cleaning the closet, dresser or storage area. If cracks are detected, seal the cracks and treat the area with a properly labeled indoor pest control product.

Even birds can be considered pests, particularly when the motorhome is parked in the flight path of a flock. Bird droppings are hard to remove and will leave stains. Prevent permanent staining to the motorhome roof by regularly cleaning the surface to remove all bird droppings.

**Damage from Pest:**

On one occasion a motorhome owner, investigating the cause of a failed inverter, discovered that a lizard had crawled in the inverter, shorted out the circuit board and died. Lizards can be captured using glue traps. To remove the lizard from the trap, dissolve the glue with vegetable oil and then release the lizard outside and well away from the motorhome. A scorpion will glow blue-green in UV light. If you suspect the presence of scorpions in the motorhome, investigate with an UV black light during the nighttime hours.

**What are the best sources of information about common household pests?**

The Internet is a great place to find information about common pests, however, the information is not always correct. The National Pest Management Association website can be useful resource about common pest. Another good source for information are colleges and universities with entomology departments (entomology is the study of insects).

Electronic pest control devices can be costly and most likely will not work on all types of rodents and insects. When calling on the services of a professional to combat pest infestation, call a reputable business that is licensed in handling pesticides. Check references. Explain that you are seeking assistance for a motorhome, as treatments may differ from standard household jobs.

If a pest problem is suspected in the motorhome, consider professional pest control help. The following guidelines can be used for selecting a pest control service.

- A good place to start is to inquire as to who has used pest control services. Inquire about the type of pest problem encountered and how satisfied they were with the service.
- Membership in the national, state or local pest control associations is a good indicator that the company has access to modern technical information and is committed to further education.
- Reach a complete understanding with the company before work starts; find out what the pest is, how the problem will be treated, how long the period of treatment will be, and what results can be expected.
- Be sure to understand what is guaranteed and what is not.

## GENERAL LUBRICATION MAINTENANCE

Performing regular scheduled maintenance ensures reliable operation and optimum service life of the various chassis components. Completed maintenance brings peace of mind knowing the various components have received proper service. Failure to follow maintenance guidelines, or perform scheduled maintenance, results in inefficient operation, premature component wear or component failure resulting in breakdown.

Maintenance schedules are usually performed at certain mile or time intervals. When performing high level procedures, lower level service should also be performed. Maintenance procedures for chassis components are located in the chassis section

**NOTE: Maintenance schedules are based on normal operating conditions and use. Operating under unusual or adverse condition shortens service intervals.**

**NOTE: Engine and transmission service intervals are listed in their respective manuals.**

### *Lubricants*

Many chassis components require lubrication. The types of lubricants used will vary with the application of the component. A component may fail prematurely due to lack of lubrication or from using an incorrect lubricant type. The component manufacturer usually recommends a particular type of lubricant with a minimum approval rating. Most lubricants are tested under strict guidelines set by the ASTM (American Society for Testing and Materials). The NLGI (National Lubricating Grease Institute) helps disperse information to the grease production industry. Grease containers usually have an approval rating by the SAE (Society of Automotive Engineers), Mil Spec (Military Specification), API (American Petroleum Institute) or by other recognized and accepted organizations. The correct lubricant type with an approved specific rating must be used whenever applying, changing or adding any lubricant. When purchasing lubricants for a specific application be sure the label affirms the type of lubricant required with the tested rating by the term "meets or exceeds" in accordance with the manufacturer specifications.

### *Lubricant Classification*

Lubricants are manufactured in many forms for a variety of applications. There are many different oil and grease consistencies each with a designed application. To properly select a particular type of lubricant for a specific application, the component must be evaluated. Component stress loads, ambient temperature, working temperature and environmental exposure are just a few of the variables to consider. Select the proper lubricant for its intended application. As an example: selecting high viscosity grease to lubricate a lock cylinder results in sluggish lock

cylinder operation especially in a cool environment. Conversely, using graphite to lubricate a component that is under extreme temperature and load will result in component failure.

Grease ratings and their base compounds are especially important when selecting a lubricant type for an intended application. Some grease compounds are manufactured for multi-use application. These are acceptable if the grease rating is in accordance with the manufacturer's recommended lubricant type and rating.

Lubricating greases are made from different base compounds giving the grease different lubricating consistencies, properties and maximum operating temperatures. Most containers list the base compound and maximum operating temperature usually listed as melting point or drip point. Lubricating components, such as brake component for example, require a high temperature special base compound grease. Lubricating this type of component with other than specified grease type will result in inadequate lubricating qualities resulting in component malfunction or failure.



**INSPECTION:** When performing any scheduled maintenance, **inspect** the area around where you are working. For example, changing the oil, look at the rear differential. **Inspect** for visual signs of fluid leaks. Use your nose to detect early signs of trouble. Most fluids and lubricants have a distinct odor. Generally, odors are most detectable soon after parking. Unusual sounds are another method of detecting a problem early. There are many types of sounds that are normal, such as the cyclic purging of the air dryer. Become familiar with the different sounds. If something sounds odd, smells peculiar or looks unusual investigate the situation.

## Proper Fluid Disposal

When performing service maintenance on the engine, transmission or rear axle, waste fluids and filters should be properly disposed of or recycled. Package used oils, antifreeze and other fluids in sealed containers. In many cases used oil is accepted free of charge at county disposal sites. Waste fluids are toxic to pets and other animals. Waste fluids should not be left in open containers. The sweet odor of antifreeze is attractive to pets, but highly toxic.

**CAUTION: Properly dispose of used antifreeze and waste oil. Animals like the sweet odor of antifreeze and may ingest it if left in open containers. Wipe up any fluid spills. Pets may lie in puddles of fluid, many of which are irritants and can cause severe chemical burns if not properly washed.**

## Greasing

When preparing to use a high-pressure grease gun, thoroughly clean all Zerk grease fittings before applying new lubricant. Keep paper towels or disposable rags handy when greasing. When lubricating items such as drive shafts and steer axle components, continued grease application is generally required until new grease appears at exit points.

Some items use sealed boots around the component to prevent moisture intrusion. When greasing these types of components care must be given to prevent excess lubricant pressure from rupturing the seal.

**WARNING: Always chock wheels before going underneath the motorhome.**

Brake actuating components require lubrication to keep the actuating components operating freely. Avoid contaminating brake linings with lubricant. Particular care and attention to details should be taken when lubricating brake actuating components. Wheel removal may be necessary to gain access the grease fittings.

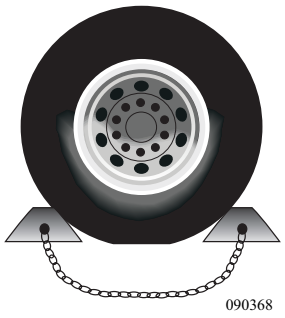


**To apply grease:**

- Clean the grease fitting. Initially operate grease gun until new lubricant discharges from nozzle then wipe nozzle clean. This avoids introducing contaminants into the component.
- Snap nozzle onto grease fitting.
- Nozzle must remain inline with the grease fitting during the application process. If the nozzle is not in line, lubricant will collect around nozzle and grease fitting, failing to lubricate the component.
- Wrap the nozzle with a paper towel or rag to prevent contamination and accidental soiling of other areas.

If the component does not accept grease the Zerk fitting may be plugged or damaged. Zerk fittings are replaceable and generally available at most auto supply stores. Zerk fittings come in a variety of angles depending on the application. Every effort should be made to lubricate the component, as neglect will only result in premature component failure.

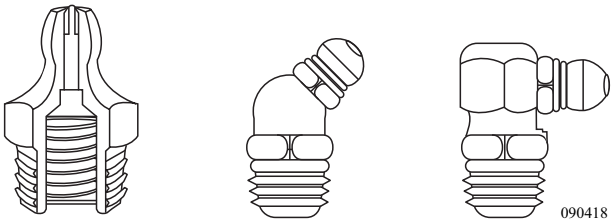


*Typical Zerk Fitting.*

**NOTE: Some grease fittings may not be accessible until the steering wheel is turned or the motorhome is moved slightly.**

Short term storage is defined as storing the motorhome for a period of thirty days or less. Properly preparing the motorhome during periods of short term storage will make bringing the motorhome out of storage a much easier process. Winterize the plumbing system if the motorhome is stored in winter months or if stored when temperatures are below 32º F.

**Checklist-Short Term Storage**

- Retract the slide rooms. Do not store the motorhome with slide rooms extended.
- Shut off all appliances. Close the primary LP-Gas valve.
- Remove all articles from refrigerator/freezer and clean thoroughly. Prop doors open to prevent mildew.
- Holding tanks should be drained and fresh water system winterized with potable antifreeze or winterize the plumbing system using air pressure.
- Retract and secure all awnings.
- Turn **OFF** the interior house power.
- Cancel the Automatic Generator Start program.
- Batteries should be stored fully charged. Batteries stored in a discharged state will readily freeze.
- If possible, park the motorhome so that the batteries are accessible for charging or changing without having to move the motorhome.
- If available, leave the motorhome hooked to shore power. Leave the main battery disconnect switches **ON**.
- Careful placement of a small heat source in the interior will help control moisture. Desiccate filter systems will help remove interior moisture.
- If AC power is not available turn the chassis battery disconnect switch **OFF**.
- If possible, store the motorhome inside a storage building.
- If stored outside, inspect all seams and seals for possible leakage.
- Store the motorhome with a full fuel tank to minimize moisture condensing at top of fuel tank.
- Vents and windows should be closed to prevent wind driven rain entrance.
- Tires should be stored at maximum inflation pressure.
- A full interior **inspection** for water leaks should be made bi-monthly. Be sure to check behind all cabinet doors and drawers.

### *Long Term*

Long term storage of the motorhome can be defined as leaving a motorhome unattended for a period of thirty days or more. A motorhome requires protection from the elements just as a house or a car would. When left out in the environment without proper storage or maintenance, a motorhome, house or car is vulnerable to the moisture and oxidation processes inherent in the environment.

There are preventative measures which should be taken and preferable situations to use when storing a motorhome. Such measures will aid in protecting and preventing a motorhome from the damaging effects caused by an accumulation of moisture.

**NOTE: The natural process of moisture in the air condensing will occur with temperature changes of 30º F or more in one day. Humidity readings of 60% or greater will allow the accumulated moisture to remain for extended periods of time.**

**If the motorhome is stored in a location where AC power is not available:**

- Turn off all the appliances.
- Turn off the interior house power.
- If possible, situate the motorhome so the batteries remain accessible. This allows a battery to be charged or replaced without moving the motorhome.
- Charge the batteries to a full state of charge.
- Cancel the Automatic Generator Start program.
- Turn the main battery disconnects **OFF**.
- When stored outside, use the available DC Volt meters to make a quick reference check of the batteries while the motorhome is in storage. If the motorhome is stored outside, solar panels may offset the parasitic loads.
- Preventative measures should be used if the voltage readings are low. Removing the motorhome from storage or moving the motorhome in case of an emergency will be a much easier process.

**NOTE: Batteries in a low state of charge will readily freeze. Freezing will damage the battery.**

**If AC power is available:**

The chassis battery disconnect switch will remain **ON**. The inverter will charge both house and engine battery banks. A 30 Amp shore power service will be more than adequate.

**CAUTION: A 20 Amp service using light duty extension cords and the required adapters create serious voltage losses. Line voltage loss and the resistance at each electrical connection is a hazardous combination and should be avoided. Damage to sensitive electronic equipment may result!**

**Type of surface to park and store the motorhome on:**

- The type of surface the motorhome is parked upon will affect how much moisture accumulation occurs on the chassis and flooring. Moisture can eventually seep into the interior.
- Parking the motorhome on a grass surface, with the tires supported by blocks, is a perfect situation for moisture to accumulate.
- A graveled parking area still allows moisture to evaporate from the ground, through the gravel and to the underside of the motorhome.
- Concrete pads seal the surface allowing better ventilation under the motorhome.
- Storage buildings with concrete floors, or heated storage facilities, greatly reduce the amount of moisture accumulation and protects the motorhome from moisture damage.

**If the motorhome is stored outdoors:**

- The interior should be heated to help prevent mold and mildew growth. Moisture removing desiccate filter systems are available from hardware and RV supply stores. Place the filter system inside the motorhome to reduce inside moisture condensation or humidity. These systems help control mold and mildew growth.
- Proper winterization of the fresh water system will prevent potential damage in extreme cold.
- Ultraviolet radiation affects soft goods and rubber products such as privacy curtains, window shades and tires. These items should be protected. Store Day/Night Shades in the **Up** position, if possible.
- Cardboard templates can be made for the windows to protect these items from exposure to direct sunlight.
- Tire covers are available to protect the sidewall of the tires from cracking. Make sure the tires contain the correct air pressure. Underinflated tires can be damaged.
- Washing the exterior regularly will help control moss accumulation. The clear coat has UV protective substances. Waxing the motorhome twice a year will augment these substances.

**Inspect the motorhome:**

- Perform a full interior **inspection** for water leaks every two weeks while the motorhome is in storage. Open all cabinet doors looking for signs of dampness or leaks. **Inspect** the ceiling areas around roof vents or other roof openings.
- The roof and sidewall seams should be **inspected** and cleaned at least twice a year. **Inspect** for exterior sealant gaps of all roof seams, vents, skylights, roof air conditioners and windows. If necessary, use the proper sealants and recommended application procedures.

**Fuel:**

A full tank of fuel will help minimize moisture condensing at the top of the tank. Diesel fuel is an organic material which will develop a microbe growth (black slime). Fuel stabilizers may be added to control microbe growth and degrading of the fuel. Consult the Manufacturers Owners Guide or a distributor (**800-343-7357**) for further detailed information on fuel stabilizers and additives.

**Brakes:**

Brakes also suffer from non-use during periods of storage. The bare metal machined surfaces of brake drums or rotors have only a light coating of dust from the brake lining friction material. The brake dust is the only thing protecting the bare metal surfaces from rusting. Only regular brake applications dry the moisture preventing rust on brake drum or rotor surfaces. During periods of non-use, oxygen and moisture oxidize the machined surfaces. Only occasional use keeps these surfaces from oxidizing. Rusty brake drum or rotor surfaces permeate the brake lining upon the first few applications, reducing the friction action of the linings.

**Engine:**

Internal combustion engines need to be "exercised" on a regular basis. This will ensure that an adequate supply of lubricating oil coats the cylinder walls and piston rings. Valve and valve seat surfaces also suffer from non-use. Some valves will remain open depending at which part of the combustion cycle the engine has stopped. The heat and cold of the day allows moisture to accumulate through the exhaust system. Start the generator at least once a month.

**Electric Motors:**

Electric motors in the motorhome should be operated occasionally to help lubricate and keep surfaces rotating freely. These items include the roof air conditioners, dash fans, dash blower motor, Aqua-Hot motors, heat exchangers and powered roof vents.

- **Plumbing Lines** - Drain and protect. (See Winterizing Section 6)
- **Fresh Water Tank -** Drain.
- **Body -** Clean and wax. Oil locks and hinges. Repair roof seams as needed.
- **Countertop and Cabinets -** Wash with mild soap and water.
- **Curtains -** Remove and clean according to care specifications.
- **Windows -** To protect the interior fabric from fading, cover windows by pulling blinds, closing shades or using a separate cover such as a sheet.
- **Holding Tank -** Drain and rinse. Close valves.

**Add a small amount of antifreeze to waste holding tanks to keep valves and gaskets lubricated.**

- **Drain Traps -** Pour RV antifreeze down all drains.
- **Refrigerator -** Clean and leave both doors propped open. Cover the exterior panels and roof vents.
- **Batteries -** Add distilled water and recharge if needed. Disconnect the cables. Remove the batteries and store them in a cool dry place. Check and recharge as needed. Never park the coach where the battery door cannot be opened.
- **Air Conditioner -** Remove the air filters. Clean or replace.
- **Roof -** Keep clear of snow accumulation or damage may occur.
- **Interior/Exterior -** Storing under cover or indoors helps extend interior and exterior life.
- **Fuel Tank -** Diesel fuel tank should be full of fuel.

## Removal from Storage

If the motorhome was properly and carefully prepared for storage, removing it from storage will not be difficult. The following checklist pertains to items or areas which should be checked before operating or moving the motorhome. If the motorhome was not properly winterized, extensive freeze damage or other serious deterioration may have occurred. Consult a dealer or an authorized service center for advice.

- Thoroughly **inspect** the outside of motorhome. Look for animal nests in the wheel wells or in other out of the way places.
- Remove all appliance flue vent covers, ceiling vent covers and air conditioning covers. Be sure the refrigerator openings are free of debris, insect nests, webs, etc.
- Open all doors and compartments. Check for animal or insect intrusion, water damage or other types of damage which may have occurred.
- Check the state of charge of the batteries. If necessary fill the cells with distilled water only and charge as necessary. Inspect the cable ends and terminals. They should be clean and free of corrosion.
- Check all the chassis fluid levels: engine oil, engine coolant, hydraulic fluid reservoir, transmission oil and rear axle oil.
- Start the engine, allowing it to reach operating temperature. Ensure the engine instruments are indicating proper readings.
- While the engine is running check the operation of headlights, tail-lights, turn signals, back-up lights, license plate light and emergency flasher. Operate the dash air conditioner. If the air conditioner does not work, or the compressor makes unusual noises, have the system checked by a qualified air conditioner technician.
- Shut the engine down. Adjust or add fluids as necessary. **Inspect** the engine for fluid leaks. Look under the motorhome for any other type of fluid leaks.
- Drain, sanitize and flush the fresh water system as outlined in the ***Water Systems - Section 6***. **Inspect** the sewer drain hose and connections for leaks. Replace if necessary.
- Operate all faucets and fixtures in the fresh water system. Run a sufficient amount of fresh water through all the water lines and faucets to thoroughly purge any potable antifreeze from the fresh water system.

**NOTE: Discard at least the first two trays of ice from the icemaker to ensure the ice does not contain traces of antifreeze or other contaminates.**

- Open cabinet doors and drawers. **Inspect** for water leaks at joints or fittings. Repair as necessary.
- Operate all 12 Volt lights and accessories. If something does not work there may be a bad 12 Volt circuit breaker or blown fuse.
- Install new batteries in battery operated safety detectors or devices. Test the carbon monoxide, LP-Gas and smoke detectors for proper operation.
- Check that the monitor panel is functioning properly.
- Inspect the 120 Volt electrical system which includes the power cord, inverter/converter, all outlets and exposed wiring.



**NOTE: Prepare the generator for operation following the instructions in the Generator Manual.**

- Start and run the generator.
- Confirm that the batteries are charging. Operate the 120 Volt appliances and air conditioners. If an electrical item or appliance is not functioning properly, contact the dealer or an authorized service center to have it evaluated.
- Have a qualified technician **inspect** the LP-Gas system and perform an LP-Gas leak test. The leak test should also include an LP-Gas regulator adjustment (if needed). The test can also verify if the regulator is faulty and should be replaced. Have the LP-Gas tank inspected.
- Operate each LP-Gas appliance. Observe all burner/pilot flames for proper color and size.
- **Inspect** and clean the interior.
- Check the sealant around all roof and body seams and windows. Reseal if necessary.
- **Lubricate** all the exterior locks, hinges and latches with a graphite lubricant.
- Check the windshield wiper blade condition. Check the wiper/washer operation.
- Wash and wax the exterior. Check the body for scratches or other damage; touch up or repair as necessary. Flush the underside thoroughly.
- Run through the operational checks for steering, brakes, engine and transmission. Operate the motorhome slowly during these checks to allow sufficient circulation of fluids and resetting of the components.
- If desired, have the dealer or repair center double-check preparation to make any necessary adjustments and/or correct defects.

# ~ NOTES ~

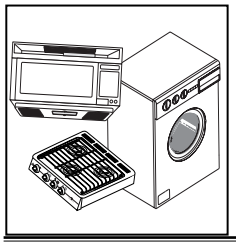

# Appliances
## Section 4


**APPLIANCES - INTRODUCTION ..... 175**
**REFRIGERATOR ..... 175**
Operation Specifics ..... 176
Control Panel ..... 177
Icemaker ..... 181
Water Line Heater ..... 181
Refrigerator Alarm ..... 182
Cooling Unit Fans ..... 182
Doors ..... 182
Service ..... 182
Interior Light ..... 183
Air in Propane Gas Supply Lines ..... 183
Storage ..... 184
**REFRIGERATOR - RESIDENTIAL ..... 185**
**ICEMAKER STAND-ALONE (Opt.) ..... 187**
Care & Cleaning ..... 188
**BAY FREEZER (Opt) ..... 189**
**WATER DISPENSER - HOT (Opt.) ..... 191**
**MICROWAVE/CONVECTION OVEN ..... 193**
Operation ..... 195
Microwave Cooking ..... 197
Convection Cooking ..... 199
Tips ..... 201
Maintenance ..... 202
Fan ..... 202
Charcoal Filter ..... 202
**AUTOMATIC APPLIANCE SELECTOR ..... 204**
**COOKTOP** ..... 204
Care & Cleaning ..... 206
**COOKTOP - ALL ELECTRIC (Opt.) ..... 207**
**WALL THERMOSTAT ..... 208**
**AIR CONDITIONING - ROOF ..... 209**
Operation ..... 210
Heat Pump ..... 211
Return Air Filters ..... 211
Auto Temp Start ..... 212
**FURNACE ..... 214**
Operation ..... 214
Using the Furnace ..... 215
Tips ..... 215
If the Furnace Fails to Light ..... 215
**WATER HEATER ..... 216**
Before Using the Water Heater ..... 216
Operation ..... 217
Water Heater Bypass System ..... 218
Pressure-Temperature Relief Valve ..... 219
Burner Compartment ..... 219
Tips ..... 220
Draining & Storage ..... 220
Troubleshooting ..... 220
**AQUA-HOT (Opt.) ..... 221**
Bay Thermostat ..... 223
Coolant Tank ..... 223
Filter/Water Separator ..... 224
Aqua-Hot Overall View ..... 225
**ELECTRIC BASEBOARD HEATER (Opt.) ..... 226**
**WASHER-DRYER PREPARED ..... 227**
**WASHER-DRYER ..... 228**
Test Procedure ..... 228
Washer-Dryer Maintenance ..... 230
Winterizing the Washer-Dryer ..... 231
**DISHWASHER (Opt.) ..... 232**

## APPLIANCES - INTRODUCTION

This section covers operation and care of various appliances found in the motorhome. The motorhome is equipped with a refrigerator, cooktop range, microwave, furnace, water heater, roof air conditioner and several optional appliances. Many of these appliances operate on AC or DC current, LP-Gas or a combination of the three.

**INFORMATION: Detailed information with CAUTION or WARNING instructions for the various appliances, other than what is found in this section, can be found in the manufacturer's manuals.**

**WARNING: Before entering any type of refueling station make sure all LP-Gas operated appliances are off. Most LP-Gas appliances used in recreational vehicles are vented to the outside. When parked close to a gasoline pump it is possible for fuel vapors to enter this type of appliance and ignite, resulting in an explosion or fire. Carbon monoxide gas may cause nausea, fainting or death. Operating an LP-Gas appliance with inadequate ventilation or partial blockage of the flue can result in carbon monoxide poisoning. Do not store flammable liquids such as lighter fluid, gasoline or propane in the outside refrigerator compartment.**



## REFRIGERATOR

The refrigerator in the motorhome operates on a different principle than a standard household refrigerator. Knowing these differences should answer questions or solve problems that may arise. A standard household refrigerator uses a compressor to pump refrigerant. This system is efficient as long as 120 Volts AC is available.

The motorhome refrigerator uses a different refrigerant. The refrigerant is heated which causes the refrigerant to circulate and vaporize. Using gravity, the refrigerant returns to the absorber vessel to start the process again. To ensure longevity and proper operation of the refrigerator, follow the specific guidelines in the refrigerator manual. With proper care and maintenance, the refrigerator should provide years of trouble-free service.

**INFORMATION: Refer to the refrigerator manual for detailed operating and maintenance instructions.**

## Operation Specifics

- The refrigerator operates from LP-Gas or 120 Volts AC electric.
- DC Voltage must be no higher than 15.4 Volts DC or lower than 10.5 Volts DC.
- AC voltage must be no higher than 132 Volts AC or lower than 108 Volts AC.
- It is important to operate the refrigerator only when level. Level the refrigerator (from front view) within 3º side to side and 6º front to back using a torpedo or bulls eye (fence post) level. Place the level on the freezer plate. The level should be within the circle by a half of a bubble. Generally, this is within comfortable living conditions.

**NOTE: Operating the refrigerator "off level" separates the chemicals, causing them to crystallize and block the circulation action of the cooling unit. Damage is cumulative and irreversible.**

**WARNING: Do not use the refrigerator if there is an ammonia smell inside or outside of the refrigerator, or if a yellowish substance appears inside or at the outside access compartment. This can be an indication of a refrigerant leak. Contact an authorized repair facility.**

**NOTE: To reduce the possibility of food spoilage, keep the interior box temperature at or below 54º F. The refrigerator will consume more energy to maintain low temperature, especially in hot, humid climates. Lower temperature may also lead to quicker frost build-up.**

**In order for the refrigerator to operate:**

- The house batteries must be charged.
- The primary LP-Gas valve must be on and the electric gas valve must be on.
- **Figure A:** The refrigerator AC cord(s) must be plugged in (located outside behind refrigerator access door).
- **Figure B:** The water valve must be on if the refrigerator is equipped with an icemaker.
- **Figure C:** If the controls do not light up check the house batteries charge status or see if the 12 Volt wires are plugged into the refrigerator's circuit board (located outside behind refrigerator access door).

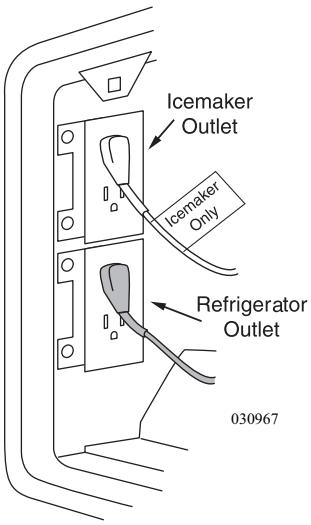


A

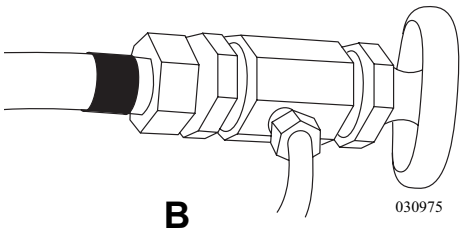


B

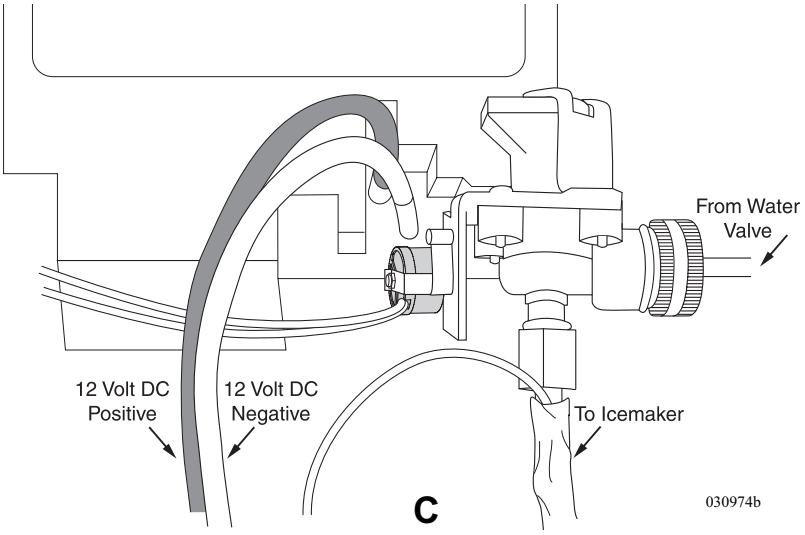


C

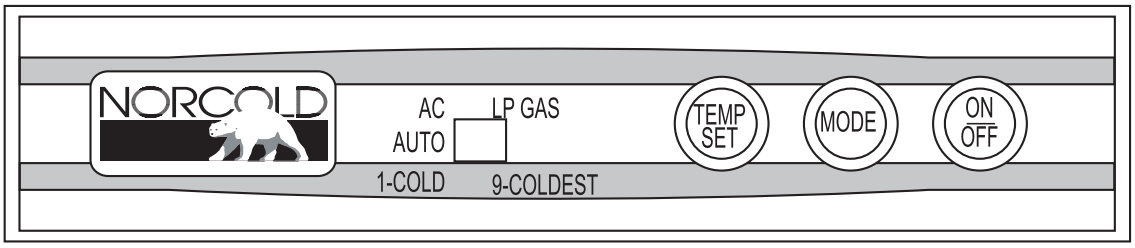


030908

**Two Door Without Icemaker:**

The **ON/OFF** button starts and shuts down the refrigerator:

- To turn on the refrigerator, push and release the **ON/OFF** button.
- To turn off the refrigerator, push the **ON/OFF** button for two seconds and then release.

The **TEMP SET** button controls the temperature adjustment of the freezer and the fresh food compartment.

- Push the **TEMP SET** button and the temperature setting "**1- 9**" appears in the display window.
- Push and hold the **TEMP SET** button and the temperature setting changes.
- When the desired temperature setting shows, release the **TEMP SET** button.
- The temperature setting shows for ten seconds and then the current operation mode of the refrigerator shows.
- The number "**9**" is the coldest temperature setting.

**TIP: The selected temperature adjustment does not change if the mode of operation of the refrigerator changes.**

The **MODE** button controls the operation mode of the refrigerator.

- Push and hold the **MODE** button and a light bar indicator is shown in the display window beside each of the operating modes of the refrigerator, one at a time.
- There is one automatic mode of operation and two manual modes of operation.
- When the light bar shows beside the mode of choice, release the **MODE** button to operate the refrigerator in that mode.

**Automatic Mode Operation:**

When the refrigerator is in **AUTO** mode, it automatically uses the most efficient energy source that is available for operation. During operation, if a more efficient energy source becomes available, the refrigerator controls change from the current energy source to the more efficient energy source as follows:

The first choice is AC operation if 120 Volts AC is available to the refrigerator. The second choice is propane gas operation if 120 Volts AC is not available to the refrigerator.

1. **If AUTO and AC bars appear in the center display, it means:**
- 120 Volt AC power is available to the refrigerator.
- The refrigerator is operating on AC electric power.

2. **If AUTO and LP GAS bars appear in the center display, it means:**
- 120 Volt AC power is not available to the refrigerator.
- The refrigerator is operating on propane gas.

**Setting Controls for Automatic Mode Operation:**

• Push the **ON/OFF** button to turn the refrigerator on.
• Push and hold the **MODE** button until the light bar shows beside **AUTO** and then release.

**If 120 Volts AC is available to refrigerator:**
- The light bar beside AC also shows in the center display.
- After ten seconds, the light bar beside AC goes off and only the light bar beside AUTO remains.
- The refrigerator is operating on AC electric.

**If 120 Volts AC is not available to refrigerator:**
- The light bar beside AC also shows in the center display.
- After a few seconds, the light bar beside AC goes off and the light bar beside LP GAS shows.
- After 10 seconds, the light bar beside LP GAS goes off and only the light bar beside AUTO remains.
- The refrigerator is operating on propane gas.

**If an energy source is available to refrigerator, but is not operating correctly:**

• A fault code shows in the center display.
• Refrigerator controls try to change to a less efficient energy source.

**If a less efficient energy source is not available:**

• A fault code shows in the center display.

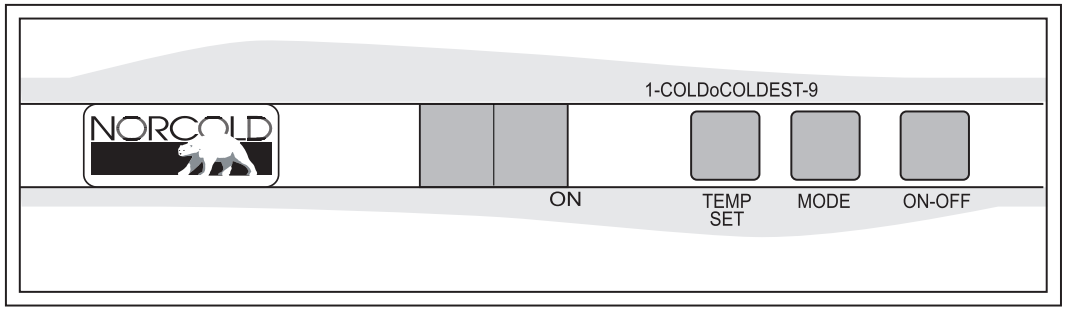


030864C

**Two Door with Ice Maker:**

• **ON/OFF** Button - Turns the refrigerator on or off.
- Push the **ON/OFF** button to start the refrigerator in Auto mode.
- Push and hold the **ON/OFF** button for two seconds to shut it off.

• **TEMP SET** Button - Adjusts the temperature.
- To adjust push and hold the **TEMP SET** button.
- Number "**9**" is the coldest setting.

• **MODE** Button - Controls the operation mode of the refrigerator.
- Push and hold the **MODE** button to select between Automatic AU, AC or LP operation.

**Manual Mode:**

When one of the two manual modes is selected:
1. **AC** = The refrigerator is operating on AC electric.
2. **LP** = The refrigerator is operating on LP-Gas.

If the LP-Gas does not ignite within 30 seconds, the control changes to a different energy source or the gas safety valve closes and “NO” “FL” displays. Turn the refrigerator off then back on. If the gas does not ignite after several attempts, consult a dealer or authorized Norcold service center.

**Automatic Mode:**

The refrigerator selects AC power over LP-Gas in Auto mode (AU). The controls select the energy source in this sequence.

1. When 120 Volts AC is available "AU AC" flashes in the display. This indicates the refrigerator is operating on AC electric. After ten seconds, the "AU AC" goes off and only a power indicator remains.
2. If 120 Volts AC is not available, "AU LP" flashes in the display. This means the refrigerator is operating on LP-Gas.
3. After the refrigerator is operating, press the TEMP SET button and set the desired temperature.

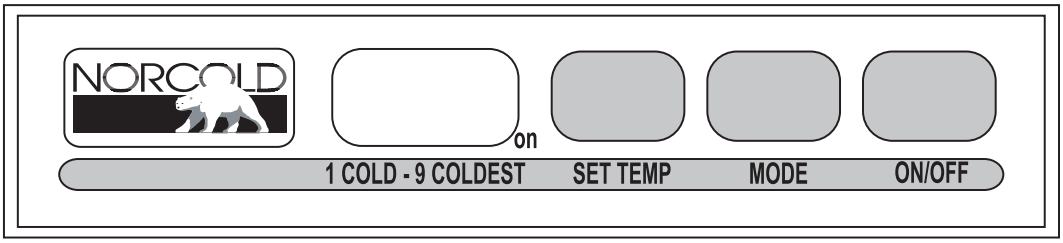


*The Refrigerator Control Panel requires 12 Volt DC to operate.* 030864

**Control Panel - Four Door:**

• **ON/OFF** Button - Turns the refrigerator on or off.
- Push the **ON/OFF** button to start the refrigerator in Auto mode.
- Push and hold the **ON/OFF** button for two seconds to shut it off.

• **LED Display** - This screen is used for mode, temperature and fault code display.

• **MODE** Button - Controls the operation mode of the refrigerator.
- Push and hold the **MODE** button to select between Automatic AU, AC or LP operation.

• **TEMP SET** Button - Adjusts the temperature.
- To adjust push and hold the **TEMP SET** button.
- Number "9" is the coldest setting.

**Manual Mode:**

When one of the two manual modes is selected:
1. **AC** = The refrigerator is operating on AC electric.
2. **LP** = The refrigerator is operating on LP-Gas.

**Automatic Mode:**

This feature selects AC over LP-Gas operation. If AC discontinues the alarm sounds and the refrigerator switches to LP-Gas operation. If the refrigerator fails to light, the alarm sounds and a code displays.

• Press and hold the **MODE** button until **AUTO** displays, release the button.
• Press and hold the **TEMP SET** button until the desired temperature displays, release button.
• In **AUTO** mode, AC or LP will remain lit for 10 seconds or when a mode has changed.

If the LP-Gas does not ignite within 30 seconds, the control changes to a different energy source or the gas safety valve closes and “NO” “FL” displays. Turn the refrigerator off then back on. If the gas does not ignite after several attempts consult a dealer or authorized Norcold service center.

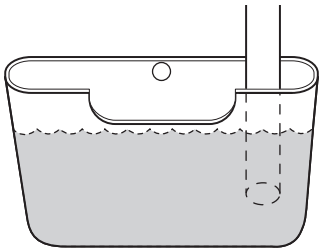


*Located behind the outside access.*

**Tips**

- Cool items first, if possible, before putting them into the refrigerator.
- Keep the doors shut. Know what you want before opening the doors.
- Allow the refrigerator 24 hours of operation before actual use to help get a "head start" with the refrigeration process.
- A box of open baking soda will help absorb food odors.
- Refrigerator icing can be slowed in high humidity if the end of the drain tube is submersed in drip pan.



## Icemaker

The icemaker works from 120 Volts AC only. The icemaker functions only after the freezer temperature is low enough. City water or the water pump must be on and the valve for the water supply line to the icemaker must be on.

- Pull the metal arm (bail) down to turn the icemaker on.
- Push the arm up to turn the icemaker off.

**NOTE: If the icemaker is in operation while the motorhome is in motion, water may spill out of the ice tray. Raise the icemaker arm to stop ice production while in transit. Do not use the first one or two trays of ice if the refrigerator has been in storage. Ice cubes may have contaminates. Do not operate the icemaker without water pressure supplied to the refrigerator. This can cause damage to the ice maker assembly.**

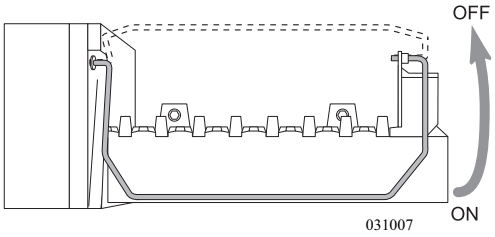


## Water Line Heater

A thermal disc supplies voltage to heater tape when ambient temperature is less then 38° F (=/- 4°) and shuts off at temperature greater than 48° F (=/- 5°). The water line heater is only for the line from the solenoid to the icemaker. The line from the shut-off valve to the water valve is not protected.

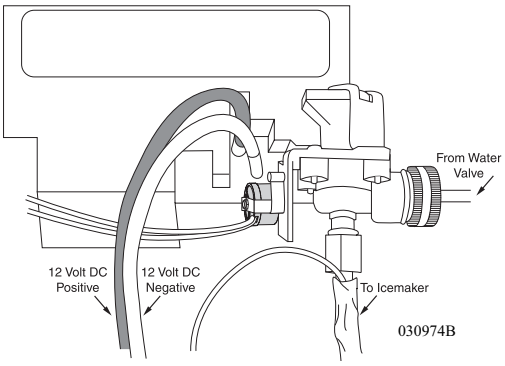

## Refrigerator Alarm

The refrigerator uses an audible alarm that will sound for the following reasons:

1. DC or AC voltage is higher or lower than allowed.
2. Refrigerator is set to Auto and 120 Volts AC is discontinued.
3. The refrigerator fails to light on LP-Gas or fails to light after a period of operation.
4. Door is open longer than two minutes.
5. The circuit board detects a failure displaying a code.

**NOTE: If the alarm sounds, note the code in the LED display and turn the refrigerator off to silence the alarm.**

**INFORMATION: Refer to the manufacturer's manual for the list of codes and their meanings.**

**WARNING: Make sure all flames are extinguished and the LP-Gas valve is off before refueling. LP-Gas and gasoline are highly flammable which can ignite, resulting in an explosion, fire or death. Many states have passed laws regarding having the LP-Gas valve open while traveling. Know the laws for the particular state in which you are traveling.**

## Cooling Unit Fans

The cooling unit is equipped with a pair of cooling fans to help pass air across the cooling unit. These fans start automatically and are audible when in operation.

## Doors

The refrigerator doors use a positive latch that secures the door with a "click" to prevent the door from opening while traveling. The doors use a heating element located in the flapper on the left door (four-door model) or in the door (two-door model). The heating element activates when operating the refrigerator in any mode to help prevent moisture accumulation in high humidity conditions.

## Service

The LP-Gas function of the refrigerator and LP-Gas pressure will need servicing yearly, depending on use. Over time, the BTU rating of the flame can change, affecting the refrigerator's performance. Ambient temperature and humidity can also affect performance and function. The BTU rating lowers when operating on LP-Gas at an altitude higher than 5,500 feet. This affects the refrigerator's performance. If possible, switch mode operation to AC while at a higher altitude.

## Interior Light

The interior light is located at the top of the fresh food compartment. When the door is open the light will illuminate.

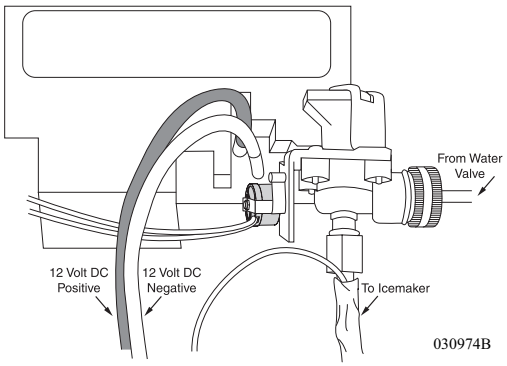


**For bulb replacement:**

1. Mark the respecting location and remove the 12 Volt DC power supply wires from the power board at the rear of the refrigerator.
2. Remove the light cover by pushing it toward the rear of the refrigerator.
3. Remove the light bulb from the holder.
4. Install a GE#214-2 replacement bulb as the replacement bulb.
5. Install the cover.
6. Connect the 12 Volt DC power supply wires to the power board at the rear of the refrigerator.

4

## Air in Propane Gas Supply Lines

For safety reasons, the refrigerator will attempt to ignite on propane gas within a specified amount of time. When starting the refrigerator for the first time, after storage, or after servicing the gas supply system, the propane gas supply lines can have air in them. Due to the air in the gas supply lines, the refrigerator may not ignite on propane gas within the specified amount of time. Follow the procedure on how to remove air from the LP-Gas supply lines.

**To remove the air from the propane gas supply lines:**

- Make sure the primary LP-Gas valve and any other necessary valves are open.
- Try lighting the cooktop burners first. The cooktop will quickly purge air from the main distribution line. When all cooktop burners are lit, light the Furnace and Water Heater (if equipped) to help purge the branch supply lines of air.
- After the other LP-Gas appliances are lit, this confirms the air is purged from the main distribution and branch supply lines to those appliances. The refrigerator should function on LP-Gas after three or four attempts.
- Push the ON/OFF button to turn the refrigerator on.
- Press the MODE button until the refrigerator indicates LP. The refrigerator will start a 30 second trial for ignition during which the gas safety valve opens and the igniter sparks.
- If the refrigerator fails to light, indicated by F or NO FL (No Flame), turn the refrigerator off then back on and set to LP mode. If after the third or fourth attempt the refrigerator fails to light, stop and consult your local dealer or an authorized Norcold Service Center.

## Storage

When storing the motorhome, the refrigerator doors have a storage position that locks the doors partially open. This will help reduce odor from mold and bacteria. A completely sealed refrigerator in storage is a perfect environment for mold and bacteria to grow.

To use the storage feature, partially open doors and slide tab into the cut-out of the strike plate.

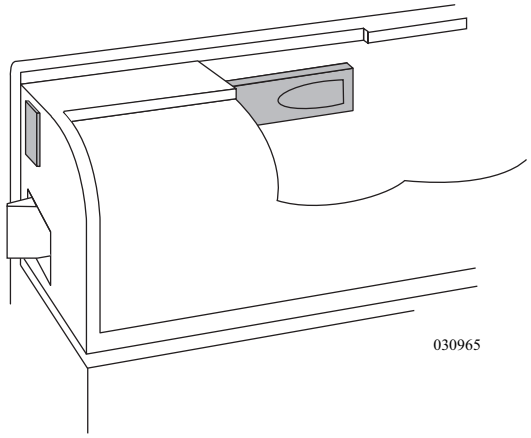


**To Use the Storage Feature:**

- Turn the refrigerator off and remove all items. Leave the drip tray under the cooling fins.
- Shorten defrost time by using trays of warm water. Do not use a heating gun, hair dryer or sharp objects to remove frost as these can damage the interior or cooling unit.
- Wash the interior using mild spray cleaners or a solution of liquid dish detergent and warm water. Do not use scouring pads or abrasive cleaners as these can damage the interior finish.
- Rinse with a solution of baking soda and water. Dry with a clean cloth.
- Lock the doors open.

**CAUTION: When defrosting, do not use a hot air blower. Permanent damage could result to plastic parts. Do not use a knife, ice pick or any other sharp instrument to remove ice from the freezer as they can puncture the system.**

The refrigerator operates from shore power, the generator or the inverter. Thermostat controls for the refrigerator and freezer temperature are located inside the refrigerator. Five temperature settings for the refrigerator are available, from Cold to Coldest. The freezer has three temperature settings A to C. The freezer door has a water dispenser and ice cube dispenser. Ice can be dispensed as crushed or cubed. Do not operate the dispenser with the freezer door open. The refrigerator operates using a compressor, it does not operate from LP-Gas.

**Tips:**

- If possible, cool items first before putting them into the refrigerator.
- Keep the doors shut. Think about what you want before opening the doors.
- Allow the refrigerator 24 hours of operation before actual use to help it get a "head start" with the refrigeration process.
- A box of open baking soda will help absorb food odors. Wipe up any spilled soda.
- When dry camping use the inverter to supply AC power to the refrigerator. The refrigerator draws 6.5 Amps AC or about 72 Amps DC from the batteries. It is recommended to use the Automatic Generator Start system. Due to the actual state of charge of the batteries, the amount of time the refrigerator will run from the inverter will vary depending on the state of charge of the batteries.

**While Traveling:**

The refrigerator may be operated while the motorhome is traveling in order to keep the refrigerator contents cold. The electrical combination of the engine's alternator and the inverter supplies the power necessary to operate the refrigerator on 120 Volts AC.

**Refrigerator Operation from inverter:**

1. Turn the inverter ON.
2. Turn the refrigerator ON.

To disable this feature:

- Turn the inverter OFF.
- Hook to shore power or start the generator.

**NOTE: It is advisable to acquire a refrigerator thermometer. Keep the interior box temperature at or below 54º F to reduce the possibility of food spoilage.**

**Icemaker:**

The icemaker works from 120 Volts AC only. The icemaker will function only after the freezer temperature is low enough. Hook to city water or turn on the water pump. The valve for the water supply line to the icemaker must be on.

**To Operate the Icemaker:**

- Hook to city water or turn on the water pump. The valve for the water supply line to the icemaker must be open.
- Pull the metal arm down to turn the icemaker on.
- Push the arm up to turn the icemaker off. To prevent water from spilling out of the ice tray while the motorhome is in transit, raise the icemaker arm to stop ice production.
- When extra quantities of ice is needed, place switch in the Ice Plus position to increase ice cube production.

**NOTE: Do not use the first one or two trays of ice if the refrigerator has been in storage. Ice cubes may have contaminates. Do not operate the icemaker without water pressure supplied to the refrigerator. This can cause damage to the icemaker assembly.**

**Water Filters:**

The motorhome has a primary and secondary water filter system. The refrigerator has a built-in water filter for the icemaker. The LED, located on the inside of the refrigerator, indicates when the internal filter should be changed.

- Green = Filter Good
- Yellow = Obtain/order filter
- Red = Change filter

After filter replacement, reset filter indicator lamp by pressing the light button five times within ten seconds.

**To Replace the Filter:**

- Turn off water supply to the motorhome.
- Rotate knob (located below freezer door) counterclockwise 90º.
- Remove knob/filter assembly by pulling assembly out and away.
- Remove knob from filter. Do not discard knob.
- Attach knob to end of new filter.
- Insert knob/filter assembly into base. Align knob so it is vertical.
- Push firmly to seat o-rings on filter and rotate knob 90º clockwise.

Replacement water filters may be obtained from **Whirlpool at 800-442-9991**.

**Changing the Light Bulb:**

The light bulb is a 10-watt appliance bulb. Always replace the bulb with the same size, wattage and shape.

**Storage:**

- Turn the refrigerator off and remove all items. Wipe the interior using only cotton cloth or paper towels. Products such as Formula 409, Dawn and Fantastik are acceptable cleaners. Do not use scouring pads or an abrasive cleanser as these can damage the interior finish.
- The refrigerator doors are a magnetic lock and seal type doors. When storing the motorhome, position the doors partially open to help reduce odor from mold and bacteria. A completely closed up refrigerator in storage is a perfect habitat for molds and bacteria to grow.

**NOTE: Consult the refrigerator owner's manual for more details.**



## ICEMAKER - STAND-ALONE (Optional)

The icemaker operates from 120 Volt power requiring either the generator or inverter to be on, or the motorhome to be connected to shore power. The potable water system supplies water for the icemaker and requires the 12 Volt water pump to be on for water pressure when operating from the fresh water tank, or when the motorhome is connected to city water supply. The supply valve or water shut off valve must be open in order for the icemaker to produce ice. A travel pin keeps door securely closed while the motorhome is in motion. The icemaker produces between 20 to 23 lbs. of ice per day and includes a see-through, removable bucket that holds up to 12 lbs. of ice.

The **ON/OFF** switch located on the lower front panel just under the front grill is switched **ON**. After switching the unit **ON**, the temperature will stabilize in 24 hours.

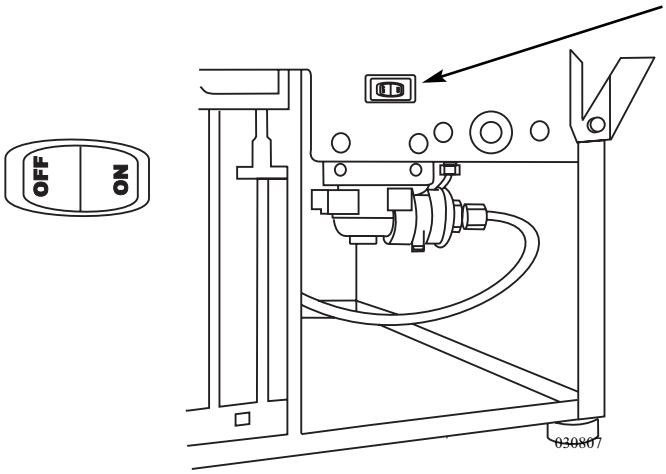


*On/Off Switch Location is as indicated.*

**Troubleshooting:**

**If the icemaker fails to make ice, or makes ice intermittently:**

1. Be sure there is 120 Volt power available from either the generator, inverter or shore power.
2. Check if the water pump is **ON** or if there is city water.
3. Check if the water shut-off valve on the water manifold to the icemaker is open.

**NOTE: When the icemaker is not in use all ice should be removed, power and water supply shut off. The water shut off valve is located on the water manifold of the icemaker unit. Leave the door propped open for ventilation.**

The icemaker requires defrosting every 6 to 8 weeks, or longer, depending on usage. Excessive build-ups of frost, or noticeable decreases in daily ice production, are an indication that the icemaker requires defrosting.

To easily defrost the icemaker, turn it off, remove the bucket and discard the ice. Leave the door open until defrosted, then wipe out the inside of the ice compartment. It also may be advantageous to place a towel inside the unit to absorb any excess water.

## *Care & Cleaning*

Clean the interior and exterior with mild detergent and warm water. The use of solvent cleaning agents or abrasives on the interior transmits taste to the ice cubes and food, also damages and discolors the interior.

Keeping the front grill free of dust and lint permits free airflow to the condenser coil. The condenser coil, located behind the front grill, requires cleaning three to four times each year. Use a soft brush or vacuum cleaner to remove dirt, lint and other accumulations from the condenser coil. When traveling with pets, clean the condenser coil frequently to remove pet hair.

**INFORMATION: Refer to the manufacturer's instructions, located in the motorhome Information File, for specific operating instruction.**

The Bay Freezer will operate on 120 Volt AC or 12 Volt DC. The freezer can operate from shore power, generator or the inverter. The 12 Volt DC power is supplied from the house batteries.

When both AC and DC power sources are available, the freezer will automatically operate from 120 Volt AC. When AC power discontinues, the freezer will automatically switch to DC operation.

**NOTE: Battery voltage is important. If house battery is low, less than 10.7 Volts DC, a decline in cooling efficiency will result. To conserve house battery power, turn off the freezer when not in use.**

**Thermostat Control:**

- **0** = **OFF**.
- The **green** power indicator lamp illuminates when the freezer is ON.
- The thermostat controls the temperature. **Number 1** (refrigerate) is **cool**, **number 5** (**freeze**) is the coldest setting. Adjust the thermostat control knob according to the types of food stored and ambient temperature.

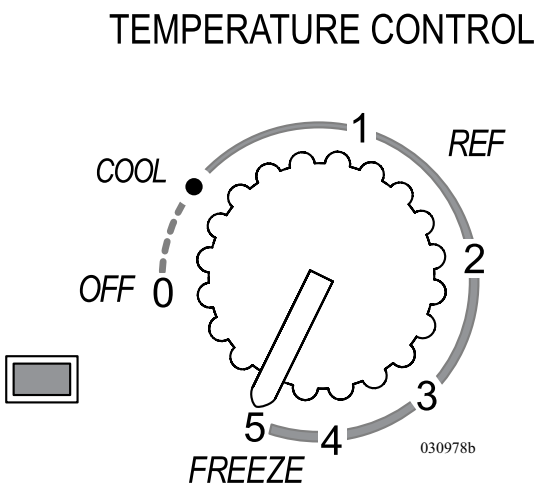


**Power Consumption:**
**AC = .80 Amp**
**DC = 3.1 Amps**

**Defrosting:**
Excessive frost inside the freezer will decrease cooling efficiency. If frost build-up is excessive, the freezer will need to be defrosted.

**CAUTION: Never use sharp objects, hair dryers, or a heat gun to defrost the freezer. Damage to the interior of the unit can occur.**

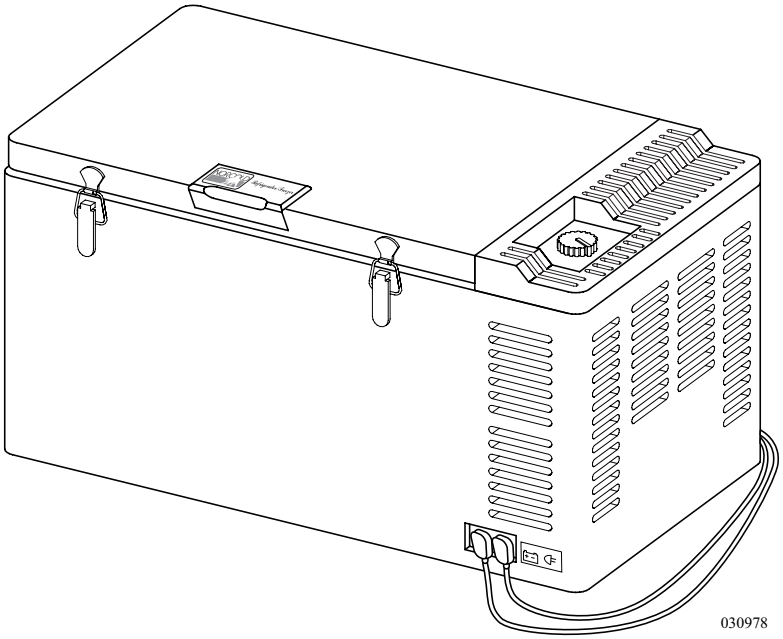


**To Defrost:**

- Turn the thermostat to OFF.
- Remove all food from the freezer.
- Place dry towels inside the freezer to absorb excess water.
- Allow frost to melt.
- When defrosted, remove wet towels and dry the inside of the freezer.
- Set the thermostat to desired setting.
- Return food to the freezer.

**Cleaning:**

A good time to clean the freezer is just after defrosting. Clean the inside of the freezer, using a solution of liquid dish detergent and warm water, as often as necessary to avoid food odors and mold. Clean both the door gasket and the inside of the freezer with the soap and water solution. Rinse thoroughly with clean water and towel dry. After drying, put a thin film of petroleum jelly on the hinge side of the gasket to keep it soft and prevent rolling.

## WATER DISPENSER - HOT (Optional)

Water is electrically heated, using 120 Volt AC, to the temperature of 190° F (88° C) by means of a compact tank mounted under the sink. A thermostat maintains the water temperature. When the tap is turned, cold water enters the bottom of the tank and forces hot water out of the faucet. The system is vented so the tank is not pressurized.

**Operation:**

Turn the Insta Hot switch to the **ON** position. It takes approximately 10 to 15 minutes for the water to reach 190° F (88° C). **Use caution: steam or hot water may spurt from the faucet without turning it on.** After 10 to 15 minutes, turn the faucet on for about 20 seconds to release any steam that may have built up in the hot water tank. Allow the water in the tank to reheat. Repeat this step one or two times. When a steady stream is dispensed, the hot water is ready to use. To shut off the system, turn the switch to the **OFF** position.

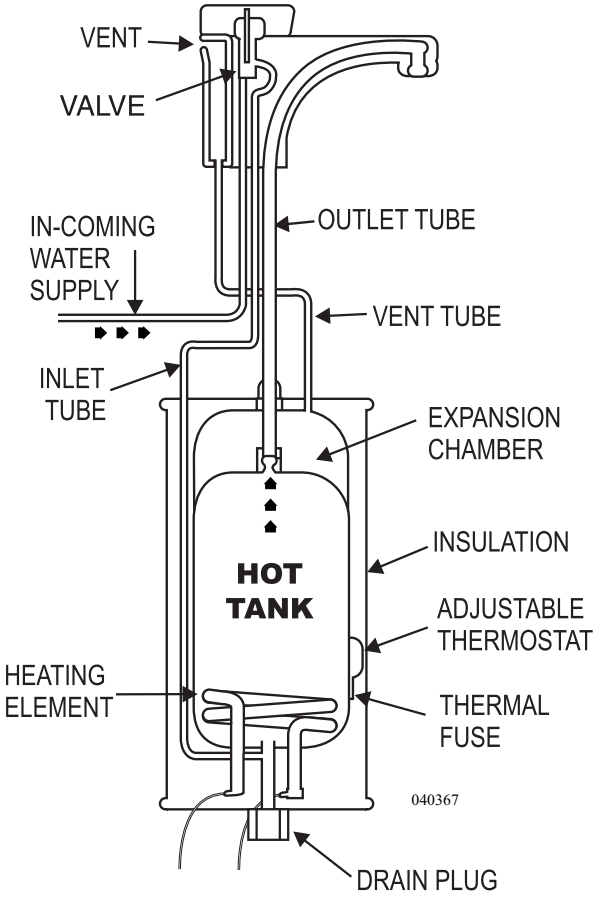


**WARNING: To minimize the possibility of fire DO NOT store flammable items such as rags, paper or aerosol cans near the tank. DO NOT store or use gasoline or other flammable vapors and liquids in the vicinity of this unit. DO NOT remove or alter the thermal safety fuse. If the thermal fuse is open contact your authorized service center. To prevent electrical shock turn the power switch OFF and disconnect the power cord before removing the access cover to adjust or service the thermostat.**

instahotswitch.tif

**Temperature Adjustment:**
If the steam cannot be stopped, or if the water boils, adjust the temperature as follows:

- Turn the galley switch, labeled InstaHot, off and unplug the power cord.
- Remove the screw and access cover.
- Insert a screwdriver in the slot of the thermostat adjusting screw and turn clockwise ½ notch to increase the water temperature, or counterclockwise ½ notch to decrease the water temperature.
- Reinstall the access cover, reconnect the electric power and turn on the galley switch.
- Draw three or four cups of water and allow unit to reheat.
- Repeat the procedure until desired temperature is reached.

**CAUTION: Do not allow the water to boil.**

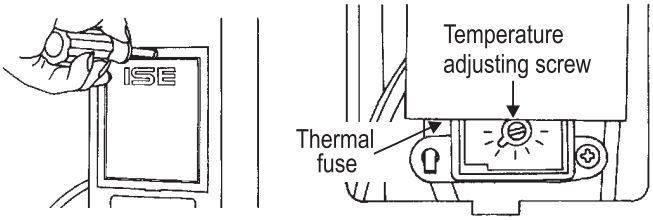

040368

**Cleaning Hot Water Dispenser:**
Use only mild cleaners to clean the dispenser spout and plastic components. Use of cleaning agents containing acids, alkalies and organic solvents will result in the deterioration of plastic components.

**Draining the Insta-Hot Tank:**
Drain the Insta-Hot tank before storage, or if interior temperature drops below freezing.

**To Drain:**

- Remove the nut retaining the bottom plate.
- Place a large pan or dish under the tank to catch leaks. Note that the Insta-Hot tank holds approximately ¾ gallon.
- Remove the drain plug.

**WARNING: Use care when operating this unit. DO NOT allow children to operate this unit. The tank is a non-pressure tank. DO NOT modify this system. DO NOT close the vent tube or connect other types of faucets or valves to the tank. Use only the faucet supplied. DO NOT allow the water to boil. The water and steam dispensed can instantly cause scalds or burns.**

The microwave oven is operated from 120 Volt AC supplied by shore power, the generator or the inverter. Microwaves heat food using sound waves generated at a very high frequency (2,450 MHZ) to agitate the water molecules inside the item being heated. The higher the water content is to solids, the faster the response or the shorter the cooking time. A turntable rotates inside the microwave when it is operating in order to heat food evenly. The turntable can be turned off if a baking dish or other large item is used. The microwave is designed to sit over a range or cooktop. When cooking from the cooktop use the microwave's two speed ventilation fan. The fan draws air in from the bottom of the microwave through a pair of grease filters then discharges the filtered air out through a charcoal filter at the top. The ventilation fan is controlled by a thermostat and activates automatically from heat produced by the cooktop.

The microwave offers many features which may include: varied cooking times with different power settings, automatic sensor cooking, a kitchen timer, a metric to American conversion chart (which includes temperature and weight), on screen programming help, childproof lockout and auto defrost cycles. The screen can display one of three different languages.



**Microwave Tips:**

- Turn the oven off before cleaning.
- Keep the inside of the oven clean. When food spatters or spilled liquids adhere to oven walls, wipe with a damp cloth. Mild detergent may be used if the oven gets dirty. Harsh detergent or abrasive cleaner is not recommended.
- Clean the outside oven surface with soap and water. Wipe away any residue using a damp cloth. Dry with a soft cloth. To prevent damage to the operating parts inside the oven, do not allow water to seep into the ventilation openings.
- If the control panel becomes wet, clean with a soft, dry cloth. Do not use harsh detergents or abrasives on the control panel.
- If steam accumulates inside or around the outside of the oven door, wipe it away with a soft cloth. This may occur when the microwave oven is operated under high humidity conditions and in no way indicates a malfunction of the unit.
- Remove the glass tray for cleaning. Wash the tray in warm sudsy water or in a dishwasher.
- Clean the roller guide and oven cavity floor regularly to avoid excessive noise. Wipe the bottom surface of the oven with mild detergent water or window cleaner and then dry. The roller guide may be washed in mild sudsy water.
- The glass tray and roller guide must always be in place during cooking.
- Place the food in a suitable container.
- Ensure the door is firmly closed before use.

**Microwave Facts:**

One of the most useful documents for the microwave is the operations manual, located in the owner's information file box. Read it carefully and keep it for reference. Another useful item is a microwave cookbook. Many will contain information about cooking principles, techniques, hints and recipes. Ensure food is in the microwave during operation to absorb the microwave energy. The magnetron, cycling on and off, may be heard for power levels less than 100%.

Condensation is a normal occurrence in microwave cooking. The moisture within foods and the room humidity will influence how much moisture condenses in the microwave. Covered foods will not usually produce as much condensation as foods that are not covered.

**NOTE: The microwave is for food preparation only. Do not use the microwave to dry clothes, newspapers, shoes or other items.**

**About Cooking:**

- Food should be arranged with the thickest area towards the outside of the dish.
- Monitor cooking times. Use the shortest amount of time required for cooking and add time as needed. For popcorn, follow product instructions and carefully monitor for the duration of popping time.
- Cover the food while cooking to prevent splatter and reduce condensation.
- Stir the food from the outside of the dish to the center, once or twice, between cooking.
- Turn food over during cooking to speed cooking times. Large food items should be turned at least once during cooking time.
- Use standing times to prevent overcooking. Covered food will continue to cook after it is removed from the microwave oven.
- Check for indications that the food is thoroughly cooked.
  - Food is steaming throughout, not just around the edges.
  - Poultry thigh joints come apart and move easily.
  - Meat or poultry is not pink in color.
  - Fish is opaque and flakes easily with a fork.
  - Center bottom of the dish is very hot to touch.

A meat thermometer is the best way to ensure that the food is cooked. The meat thermometer should be inserted into the thickest part of the meat, away from bone or fat. Most food should range between 160º F to 180º F. Never leave the thermometer in during cooking as it can shatter.

| FOOD | DO | DO NOT |
|---|---|---|
| Eggs, Sausages, Fruits & Vegetables | • Puncture egg yolks before cooking to prevent bursting.<br>• Pierce skins of potatoes, apples, squash, hot dogs & sausages to allow steam to escape. | • Cook eggs in shells.<br>• Reheat whole eggs. |
| Popcorn | • Use specially bagged popcorn for use in the microwave.<br>• Remove popcorn when popping slows to 1 or 2 seconds in between pops. Use the POPCORN setting. | • Pop popcorn in regular brown bags or glass bowls.<br>• Exceed maximum time on popcorn package. |
| Baby Food | • Transfer baby food to small dish & heat carefully. Stir often. Check temperature before serving. | • Heat disposable bottles.<br>• Heat rubber nipple.<br>• Heat baby food in original jar. |
| General | • Cut filled baked goods after heating to release steam.<br>• Stir liquids before and after heating to avoid boiling over.<br>• Use deep bowls for cooking liquids or cereals to avoid boiling out of the container.<br>050259 | • Heat or cook in closed jars or air-tight containers.<br>• Use for Canning. Cooking and heating may not destroy bacteria.<br>• Deep fat fry.<br>• Dry wood, gourds, herbs or wet paper. |

microwave food chart

**Microwave Cooking Safety:**

- Always use pot holder to prevent burns when handling utensils that are in contact with hot food. Enough heat can transfer from food through utensils to cause skin burns.
- Stay near microwave while operating and check frequently to prevent overcooking.
- Never use the cavity as a storage area for cookbooks or other items.
- Avoid steam burns by directing steam away from face and hands.

## Operation

The microwave/convection oven operates from 120 Volt AC supplied by shore power. The microwave has a power output of 850 watts and a convection heater output of 1400 watts. Oven capacity is 1.1 cubic feet.

The microwave/convection oven has the ability to cook food with heat like an electric oven or preheat the oven with heat and cook with microwaves. Other features include the ability to cook with microwaves and convection at the same time, sensor cooking and a built-in broiler. A brief overview of these features may aid in the operation of the microwave/convection oven.

**NOTE: The microwave is for food preparation only. Do not use the microwave to dry clothes, newspaper, shoes or other items.**

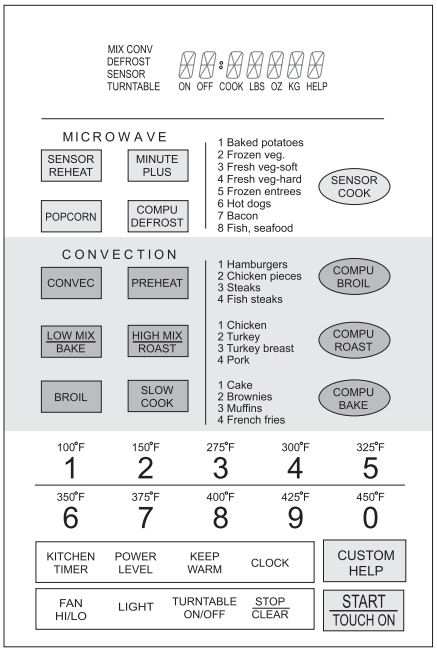


031006C

**Safety Lock:**

The microwave comes with a safety lock feature, which prevents the oven from operating accidentally. To use this feature:

- Press the **CUSTOM HELP** pad.
- Press the **1** pad.
- Press the **START/TOUCH-O**N pad.

The oven is locked. If any button is pressed, **"LOCK"** appears on the screen. The fan and hood light is still operational with the Safety Lock feature on. To return the oven to normal operation:

- Press the **CUSTOM HELP** pad.
- Press the **1** pad.
- Press the **START/TOUCH-ON** pad. Normal operation will resume.

**Setting The Clock:**

- Press the **STOP/CLEAR** pad.
- Press the **CLOCK** pad.
- Enter correct time in sequence using the number pads.
- Press the **CLOCK** pad to begin time.

**NOTE: The clock is a 12 hour clock only.**

**Kitchen Timer:**

- Press the KITCHEN TIMER pad.
- Using the number pads enter minutes and seconds, or 00 if no seconds.
- Press the START/TOUCH-ON pad to begin timer. Timer end will be signaled by one long beep.

**Hood Light:**

To turn the hood light on or off touch the **LIGHT** button.

**Ventilation Fan:**

Press the **FAN HI/LO** button once for high, twice for low and three times for off.

**Press the STOP/CLEAR pad to:**

- Erase, if a mistake is made during programming.
- Cancel the kitchen timer.
- Stop the oven, temporarily, during cooking.
- Press **START/TOUCH-ON** pad to resume.
- Return the time of day to the display.
- Cancel a program during cooking (touch the pad twice).

**Turntable On/Off:**
- Press TURNTABLE ON/OFF pad to stop or start the turntable.
- Enter the cook time desired minutes and seconds.
- Enter power level desired.
- Press the START/TOUCH-ON pad.

**Microwave - Timed Cooking:**
The maximum amount of cooking time is 99 minutes and 99 seconds.
Be sure to enter minutes and seconds. If seconds are not desired enter 00.

**WARNING: If a fire flares up when using the cooktop turn off the ventilation fan. The fan may spread the flame. If the ventilation fan has started automatically from a heated cooktop it can not be manually turned off. Turn off the microwave AC circuit breaker to prevent the flame from getting up into the microwave and spreading the fire.**

**NOTE: When cooking in convection mode try to avoid using the inverter as the AC power source due to the high rate of battery consumption.**



## Microwave Cooking

Press and hold the **START/TOUCH-ON**. The microwave pad operates at 100% power until the pad is released. This mode can be used for up to three minutes and up to three consecutive cycles.

**One Minute Cook Times:**
Press the **MINUTE PLUS** pad if one minute at full power is desired or to add one minute intervals to cooking time. The **MINUTE PLUS** pad must be pressed within one minute of closing the door, or during selected cooking time.
For safety the **MINUTE PLUS** feature will lock out if there is no microwave activity within one minute of closing the door. Use the **START/TOUCH-ON** pad to reset the one minute safety period.

**Microwave Cooking:**
To use 100% power, enter cook time by pressing the number pads. Press the **START/TOUCH-ON** pad to begin cook time. To use settings lower than 100% power, use the number pads to enter desired cooking time. Press the **POWER LEVEL** pad. Use the number pad to select desired power level. Press the **START/TOUCH-ON** pad to begin cook time.

**Multiple Sequence Cooking:**
If sequential cooking times with varied power levels are desired, press the **POWER LEVEL** pad and select desired power level. Use the number pad to enter cook time for the first interval. Press **POWER LEVEL** pad again, select

desired power level, then enter cook time for the next time period. Press the **START/TOUCH-ON** pad to begin sequential cooking. The microwave can hold up to four sequential cook time periods. If full power is desired in any of the time periods, skip the power level step and 100% power is automatically selected.

**Keep Warm:**

Press the **KEEP WARM** pad during cooking time to automatically keep food warm for up to 30 minutes after cooking time has expired. To use this feature after cooking time has expired, or after the food has been removed, place the food back into oven and press the **KEEP WARM** pad.

**Defrosting:**

Defrosting can be done on manual time selection or use the microwave's CompuDefrost.

**Manual Defrost:**

Press the **POWER LEVEL** pad. Select number 3 for defrost power. Enter desired defrost time. Be sure to stir or break food apart at regular intervals.

**CompuDefrost:**

The microwave has automated defrost programs for different foods and weights. Press the **CompuDefrost** pad to enter this mode. Press **CompuDefrost** again to select between ground meat, steak or chicken. Use number pads to enter weight of food being defrosted. Press **START/TOUCH-ON** to begin defrost cycle.

**Sensor Cooking:**

The microwave has electronic sensors that sense moisture or humidity given off by the food during the cooking process. Electronic sensors will be affected if room temperature exceeds 95° F. To adjust the sensor cooking mode to allow for more or less cooking time, press the **SENSOR COOK** pad. Press the **POWER LEVEL** pad once to increase cooking time or twice to decrease cook time.

To use the sensor cooking mode, press the **SENSOR COOK** pad. Select the number or food desired from the library listed adjacent to the **SENSOR COOK** pad. Press the **START/TOUCH-ON** pad to begin sensor cooking.

## Convection Cooking

The interior of the microwave produces heat just as in a regular oven. The convection cooking mode has special options such as a broil mode, the ability to preheat the oven by convection and use of microwaves to complete cooking or to preheat.

**NOTE: When using the convection oven feature, leave the turntable in place and do not restrict the rotation. This can damage the microwave.**

**Cooking with Convection:**

Press the **CONVEC** pad. Press the numbered pad with the desired cooking temperature. Press the numbered pads for desired cooking time. Press the **START/TOUCH-ON** pad to begin convection cooking.

Enter cook time for the first interval. Press **POWER LEVEL** pad again, select desired power level, then enter cook time for the next time period. Press the **START/TOUCH-ON** pad to begin sequential cooking. The microwave can hold up to four sequential cook time periods. If full power is desired in any of the time periods, skip the power level step and 100% power is automatically selected.

**Keep Warm:**

Press the **KEEP WARM** pad during cooking time to automatically keep food warm for up to 30 minutes after cooking time has expired. To use this feature after cooking time has expired, or after the food has been removed, place the food back into the oven and press the **KEEP WARM** pad.

**Defrosting:**

Defrosting can be done on manual time selection or use the microwave's CompuDefrost.

**Manual Defrost:**

Press the **POWER LEVEL** pad. Select number 3 for defrost power. Enter desired defrost time. Be sure to stir or break food apart at regular intervals.

**CompuDefrost:**

The microwave has automated defrost programs for different foods and weights. Press the **CompuDefrost** pad to enter this mode. Press **CompuDefrost** again to select between ground meat, steak or chicken. Use number pads to enter weight of food being defrosted. Press **START/TOUCH-ON** to begin defrost cycle.

**Sensor Cooking:**

The microwave has electronic sensors that sense moisture or humidity given off by the food during the cooking process. Electronic sensors will be affected if room temperature exceeds 95° F. To adjust the sensor cooking mode to allow for more or less cooking time, press the **SENSOR COOK** pad. Press the **POWER LEVEL** pad once to increase cooking time or twice to decrease cook time.

To use the sensor cooking mode, press the **SENSOR COOK** pad. Select the number or food desired from the library listed adjacent to the **SENSOR COOK** pad. Press the **START/TOUCH-ON** pad to begin sensor cooking.

The interior of the microwave produces heat just as in a regular oven. The convection cooking mode has special options such as a broil mode, the ability to preheat oven by convection and use of microwaves to complete cooking or to preheat.

**NOTE: When using the convection oven feature, leave the turntable in place and do not restrict the rotation. This can damage the microwave.**

**Cooking with Convection:**

Press the **CONVEC** pad. Press the numbered pad with the desired cooking temperature. Press the numbered pads for desired cooking time. Press the **START/TOUCH-ON** pad to begin convection cooking.

**Manual Broiling:**

The Manual Broiling temperature is automatically preset to 450° F. Only the cooking time can be adjusted.

To use the broiler, press the **BROIL** pad. Enter amount of cooking time. Press the **START/TOUCH-ON** pad to begin preheating the oven. Four beeps will signal the end of the preheat cycle. Food can now be placed into the oven.

**CompuBroil:**

The CompuBroil cooking method has programs preset for common foods like hamburgers, steaks, chicken and fish. Temperature and time are preset depending on the food quantity. The amount of cooking time can be adjusted to fit particular needs. The **POWER LEVEL** pad will vary the preset cooking time. **Press once for more time and twice for less time.**

To use the **CompuBroil** feature: Press the **CompuBroil** pad and select the food number from the food library next to the CompuBroil pad. Enter the number of pieces being broiled. Press the **START/TOUCH-ON** pad to begin the preheat cycle. A series of four beeps signal the end of preheat cycle.

**Automatic Mix Cooking:**

This method combines both the convection oven and microwave at the same time. The microwave uses 30% power on **HIGH/MIX** and 10% power on **LO/MIX** while in this mode. The convection temperature can be changed from 100° F to 450° F. The default convection temperature is 325° F for both **HIGH/ MIX** and **LO/mix.**

To use this feature: Select either **HIGH/MIX** or **LOW/MIX** and use the number pads to enter cooking time. Press the **START/TOUCH-ON** pad to begin the mixed cooking cycle.

**CompuRoast or CompuBake:**

These features can be used for food items ranging from pastries and cakes to roasts, chicken and pork. The temperature is preset for both functions. Only the cook times can be tailored for individual preference by entering into either the **CompuRoast** or the **CompuBake** mode. Press the **POWER LEVEL** pad once for more cooking time and twice for less cooking time.

**To use either function CompuRoast or CompuBake:** Press the desired pad, enter the food type from list next to the mode used and enter the food type being cooked by using the number pad.

To use **CompuBake**: Press the **START/TOUCH-ON** pad to begin the preheat cycle.

To use **CompuRoast**: Enter the weight of item using the number pads. Press the **START/TOUCH-ON** pad to begin the preheat cycle. Four beeps will signal the end of the preheat cycle and the oven is now ready.



***Tips***

- Check the type of cookware being used to see if it is microwave or oven safe depending on the type of cooking being done.
- Gold paint or glaze may contain a trace amount of gold which is electrically conductive and is not microwave compatible. Hand-painted china commonly contains traces of metal.
- To test utensil for microwave compatibility place it in the microwave with an 8 oz. plastic cup of water. Set the microwave at full power for one minute. Carefully feel the utensil. The entire utensil should be cool to the touch.
- Cover food with a microwave-safe paper towel or upside-down plate to keep food spattering to a minimum. Place a paper towel on the turntable to keep clean-up at a minimum.
- Clean up all spills or spatters before they dry.
- Food odors may linger inside oven. To help eliminate odors, combine the juice and the peel from one lemon, several whole cloves and 8 oz. of water into a two cup bowl. Place in oven on high power, bring to a boil for several minutes. Let cool in the oven for several minutes.
- Some food wrappers may be foil lined. Check the wrapping carefully before cooking or heating. A small amount of foil is acceptable if it is not wrinkled or near the sides of the microwave.
- If the microwave screen is not lit, plug another electrical appliance into the same outlet as the microwave to verify AC power is present. If the test item works, contact an appliance repair facility to have the microwave checked.

## Maintenance

The exterior of the microwave is plastic and metal. The interior is metal. Do not use scouring pads, harsh or abrasive cleanser, chemical cleaners or petroleum based thinners as these can damage the finish. Use mild soap and water with a damp cloth or paper towel to remove most stains or spills. When cleaning the touch pad open the door to prevent accidental operation. Use mild soap and water with a soft cloth. Avoid using excess amounts of water on the touch pad. The turntable plate and oven racks are dishwasher safe.

## Fan

The fan automatically starts when heat rises from the range surface or when convection settings are used. The fans can not be shut off manually and will remain on until excess temperatures are decreased.

## Charcoal Filter

Depending on usage the charcoal filter should be replaced every 6 to 12 months. Use the following procedure to remove the louvers and replace the charcoal filter and oven light.

1. Remove power to the microwave.
2. Remove the screws securing the louver.
3. Insert a flat edge screwdriver over each tab pressing downward and moving the louver away from the microwave.
4. Remove the louver from the face of the microwave.
5. Remove and replace the charcoal filter ensuring the filter is positioned on the supporting tabs.
6. Replace louver and mounting screws.

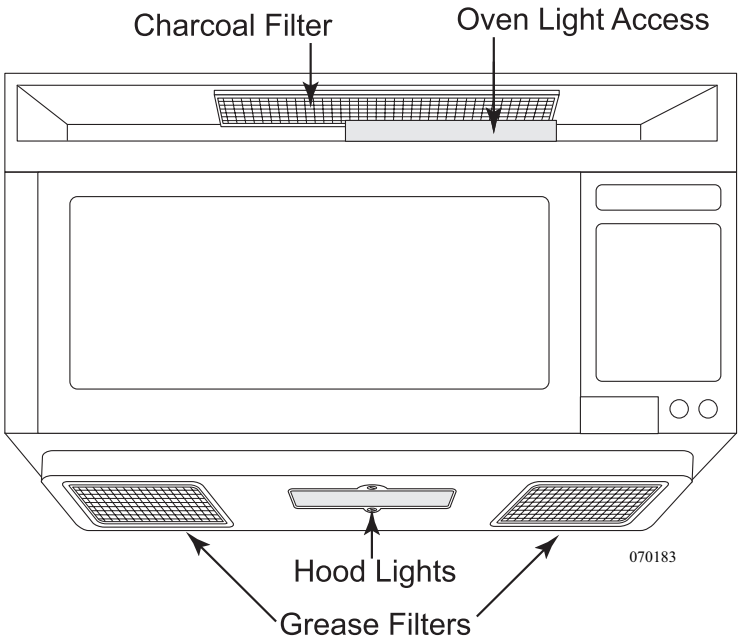

**Oven Light:**

1. Remove the louver as indicated under the charcoal filter.
2. Slide the metal light cover forward and lift upwards.
3. Remove the light bulb and replace only with an equivalent watt bulb.

**CAUTION: Do Not Exceed 30 Watts.**

4. Replace light cover, louver and mounting screws.

**Hood Light:**

1. Remove power to the microwave.
2. Remove the screw securing the light cover.
3. Remove the light bulb and replace only with an equivalent watt bulb.

**CAUTION: Do Not Exceed 30 Watts.**

4. Close the cover and re-secure with screw from step two.

**CAUTION: Light cover may be hot. Do not touch glass with lamp ON. Never use the light for prolonged periods such as a night light.**

**Grease Filters:**

Do not operate the oven without the grease filters in place. This can damage the microwave. Grease filters should be cleaned at least once a month. To remove the filters, use the pull-tab to slide the filter to the end of the opening and tip down. Soak the filters in the sink or in a dishpan filled with hot water and detergent.

- Do not use ammonia or other alkali-based products that may darken the filter material.
- Agitate the filter. Use a scrub brush to remove caked on grease.
- Rinse the filter thoroughly and shake dry. Place the filter back into the opening, tip upward and slide filter to the end of the opening. Lock in place. Be careful not to kink or warp the filter upon installation.

**Microwave Cooking Safety:**

- Always use pot holder to prevent burns when handling utensils that are in contact with hot food. Enough heat can transfer from food through utensils to cause skin burns.
- Stay near microwave while operating and check frequently to prevent overcooking.
- Never use the cavity as a storage area for cookbooks or other items.
- Avoid steam burns by directing steam away from face and hands.

## AUTOMATIC APPLIANCE SELECTOR

The Automatic Appliance Selector limits the possibility of shore power overload by allowing only the priority appliance to operate. The system uses automatic switching relays to control AC power to the appliances hooked to Automatic Appliance Selector.

The appliances are listed in the order in which they are controlled by the Automatic Appliance Selector.

**Standard:**
1. Washer-dryer
2. Center roof air conditioner

**All Electric:**
1. 120 Volt AC cooktop (All Electric)
2. Washer-dryer
3. Center roof air conditioner

The appliances are listed in order of operation priority. Example; when operating the washer-dryer on a standard motorhome, the center roof air conditioner will not operate until the washer-dryer is turned off. Similarly, the center roof air conditioner will not operate on an All Electric motorhome until the washer-dryer and cooktop are turned off.

## COOKTOP

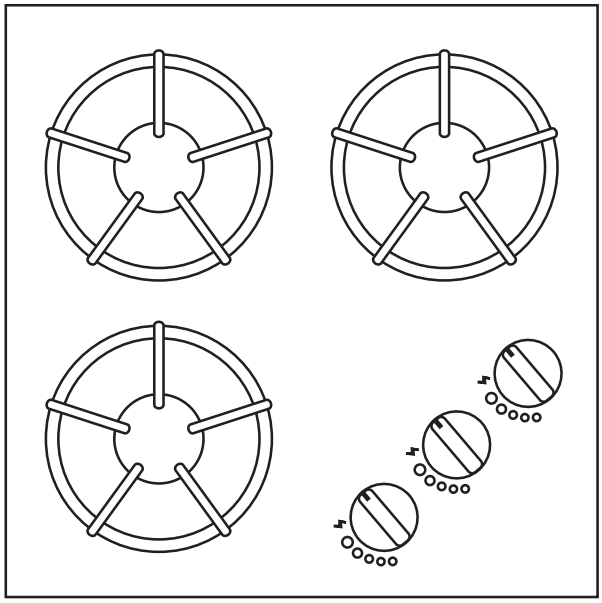

030891

The cooktop utilizes burners that spread heat evenly across the bottom of the cookware. The cooktop uses an electric ignition system which requires 12 Volt DC to operate. The cooktop should be used for cooking purposes only, not as a heating source. When the burner valve is opened the fuel source flows through the valve into the mixture tube. The fuel passes by a hole or venturi in the mixture tube, which draws air in with the fuel for a proper fuel/air ratio. The flame should have a blue appearance with a lighter blue defined flame at the burner head. A yellow flame or yellow flame tips indicate a rich fuel mixture, which can leave a black color or carbon on the bottom of the cookware.

The cooktop operates under the following conditions:
1. The LP-Gas primary valve on the LP tank is open.
2. The LP-Gas valve under the cooktop (located next to the regulator) must be open.
3. The control knobs are opened.

**Using the Cooktop:**

1. Place the cookware on the burner grate over the desired surface burner.
2. Open the burner valve by applying a downward pressure on the knob and rotating counterclockwise from the OFF position.
3. Press the knob down to activate the igniters. All igniters will click at the same time.
4. When the burner lights, release the knob. Rotate knob to the desired flame setting. In the event of a power outage or igniter failure, the cooktop can be lit manually.

**Surface Burners:**

The surface burners have an independent heat rating. The rating for the burners used are 6,000 BTU's and 12,500 BTU's. The smaller rated burner can be used for simmering or smaller quantities of food in small cookware. The large burner should be used with larger cooking utensils. The flames at the surface burners should have an even appearance at the burner base. Uneven flames may indicate the need to clean the burners.

**Control Knobs:**

- Press down to activate electric spark to light the burner.
- **HI -** Used to start the cooking process and bring liquids to a boil quickly.
- **MED HI -** Used to hold a boil in liquids.
- **MED -** Used for gravy and large amounts of vegetables.
- **MED LO -** Used to keep food cooking at a reduced heat after starting from higher settings.
- **LO -** Use to keep food warm or to simmer.

**WARNING: Do not leave burners unattended during cooking. Do not leave burner valve(s) open while burner(s) are not lit. LP-Gas is heavier than air and will settle on the floor and "hide" in corners. If you smell gas, extinguish all open flames and turn off the main gas supply. Liquid propane is highly volatile, highly explosive and extremely dangerous. Explosion, fire, property damage, injury or death can result. Open all windows and doors. Do not touch any electrical switches. They may cause a spark which can ignite. Evacuate the motorhome and shut off the primary LP valve. Contact a qualified service center to have the problem correctly diagnosed and repaired before resuming operation.**

- A yellow flame is an indicator of incorrect fuel/air ratio. Lowered BTU output and carbon build up can occur.
- When cooking at an altitude above 5,000 feet, the flame may change appearance and the flame BTU output will be lowered. Allow extra cooking time.
- Do not allow the tips of the flame to extend beyond pan or pot edge. When this occurs, heat is wasted and possibility of injury increases.
- Cooking time can be reduced if the least amount of liquid is used. The choice of cookware selected can make a big difference.
- Additional information can be found in the "Use and Care Guide" located in the Information File Box.

## *Care & Cleaning*

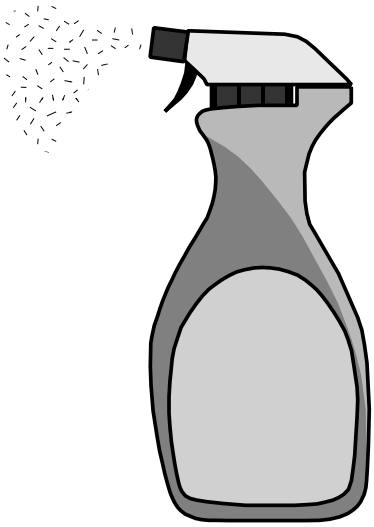

Cleaning the cooktop is quick and easy. Regular cleaning with a soft cloth and a warm detergent solution is generally enough to keep the cooktop clean. Wash, rinse and dry with soft cloths. Clean the cooktop when it is cool. Use a dry cloth or paper towel to clean spatters or spills when the surface is warm, before it gets baked on. Glass cleaner sprayed on a paper towel should be used for the cooktop surface. Do not spray glass cleaner directly on the surface. DO NOT use abrasive cleaners or steel wool. Harsh cleansers like bleach, ammonia and oven cleaner should NEVER be used. The surface burner grate and caps should be cleaned using the same guidelines as the cooktop surface.

**Porcelain Enamel:**

Porcelain enamel is a type of glass fused on steel at a very high temperature. It is not extremely delicate, but it must be treated as glass. Sharp blows, radical surface temperature changes, etc., will cause enamel to chip or crack. Some foods, such as vinegar, lemon juice, tomatoes and milk, contain acids which can dull the finish of the enamel. To avoid dulling the finish, wipe up the spill before it is baked on. Remember, the surface is glass and must be given consideration when cleaning. Steel wool and course, gritty cleanser will scratch or mar the surface. Any gentle kitchen cleanser powder or grease cleaner will be suitable. For further information on care and maintenance of the porcelain, call *"Hopes Cultured Marble Polish"* at 800-325-4026.

## COOKTOP - ALL ELECTRIC (Optional)

The electric cooktop operates from 120 Volts AC supplied from either shore power or the generator. The appliance selector switch must be placed in the cooktop position for the cooktop to operate.

**To Operate the Cooktop:**

- Place appliance selector switch to the cooktop position.
- Push down and rotate knob to the desired heat setting.
- Red indicator lamp glows when a knob is on.

**NOTE: All electric coaches require the appliance selector switch to be in the cooktop position for operation.**



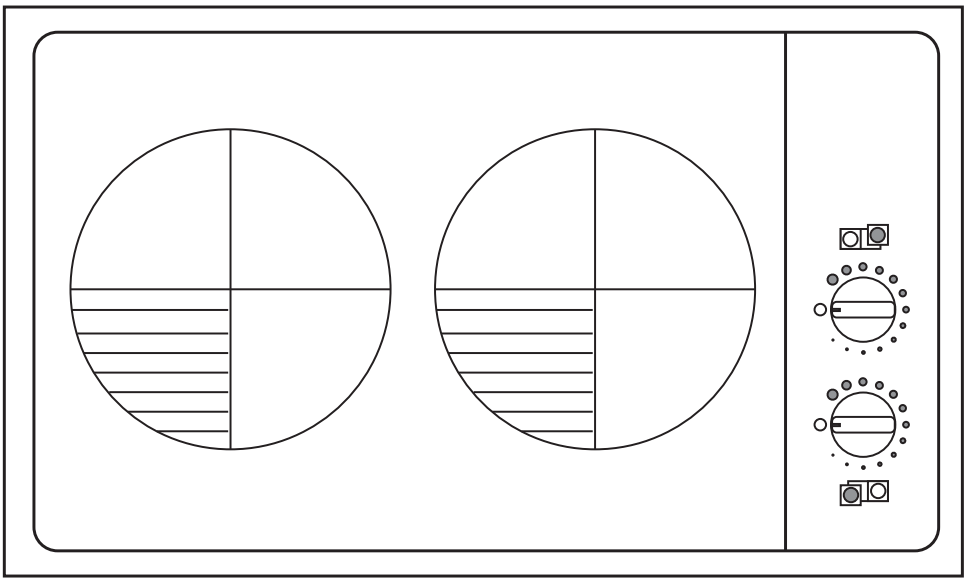

030890

## WALL THERMOSTAT

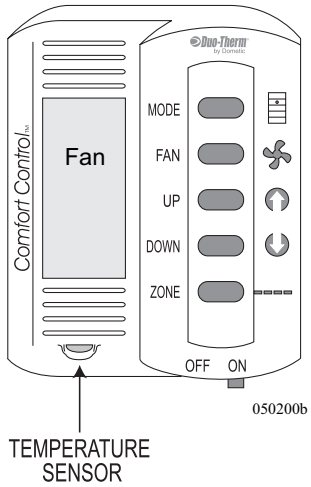


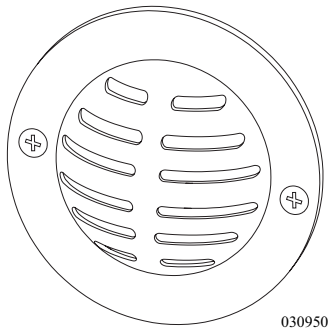


*Remote Temperature Sensor*

Two comfort controls operate the **HVAC** (**H**eating, **V**entilating and **A**ir **C**onditioning) system. One comfort control is located in the living room, the other in the bedroom.

The living room comfort control will operate the front roof air conditioner functions and the LP-Gas furnace operation. If the motorhome is equipped with an Aqua-Hot, the living room comfort control will operate the dinette and living room heat exchangers.

The bedroom comfort control, operates the rear roof air conditioner and (if equipped) the mid roof air conditioner functions. If the motorhome is equipped with an Aqua-Hot, the bedroom comfort control will operate the hallway, bathroom and bedroom heat exchangers. Both comfort controls use a liquid crystal display to show the current mode status.

There are five different functions of the HVAC system: **Off**, **Fan**, **Cool**, **Heat Pump** and **Furnace**. These are selected by repeat pressing of the **MODE** button. The **FAN** button controls the fan speed of the roof air conditioner. Three speeds are available: **Low**, **Medium** and **High**. Fan speed control applies only to the blower speed of the roof air conditioner. Selecting the fan speed **Auto** adjusts the fan speed automatically, depending on temperature set point and actual temperature in a selected zone. The roof air conditioner will use all three blower speeds (low, medium or high) when Auto fan is selected in Cool mode. If operating in Heat Pump mode with Auto Fan selected, only low or high blower speeds are used.

The motorhome is divided into three operating Zones: **Front**, **Middle** and **Rear**. The living room comfort control is Zone One, although this is not displayed. The bedroom comfort control operates the middle area, which is displayed as Zone Two. The bedroom area is considered Zone Three; however, it is displayed as Zone One on the bedroom comfort control. Pressing the **ZONE** button selects between the different zones available. The zone selected will flash. The **UP** or **DOWN** buttons control the temperature in any mode.

**NOTE: The Comfort Control must be ON to operate any HVAC function. Do not select conflicting modes of operation. One zone cannot be on Cool while another zone is set to Furnace.**

**NOTE: The motorhome will not heat or cool faster by selecting a very high or very low temperature setting.**

The roof air conditioners operate from 120 Volts AC only, by shore power or the generator. Operations are controlled by the 12 Volt DC comfort control. The electronics in the comfort control use a telephone style patch cord to send low voltage signals to the roof air conditioner's circuit board. The circuit board controls the desired roof air functions and Aqua-Hot blower operation. The refrigeration operation principle of the roof air conditioner is the same as the dash air conditioner or a household type refrigerator, functioning as an enclosed system. The compressor pumps refrigerant into a condenser as high-pressure vapor. A condenser expels heat from the vapor into the atmosphere. Vapor condenses to high-pressure liquid. The liquid is forced through a metered capillary tube and then into the evaporator or low side pressure. The refrigerant changes from liquid to vapor as the refrigerant extracts heat. The compressor pumps the vapor to the condenser repeating the cycle. Operating the air conditioner in Heat Pump mode reverses the cycle. Reversing the refrigerant flow blows heated air into the interior of the motorhome. There are ambient temperature operating limitations in Heat Pump mode.



**NOTE: The air conditioning system freezes moisture in the air. It is recommended to set the blower fan speed to high when operating in high humidity.**

**NOTE: There are ambient air temperature limitations in Heat Pump mode. The roof air conditioner will not operate in Heat Pump mode with ambient temperatures of 30º F and below.**

**Aux Heat Mode:**

If the Heat Pump mode is selected when ambient temperature is approximately 30° F, or if operating in Heat Pump mode and temperature drops to approximately 30º F, the air conditioner will stop Heat Pump operation and Aux Heat operation begins. Aux Heat mode selects the furnace as the auxiliary heat source. Aux. Heat mode initiates automatically due to refrigerant limitations in cold temperatures. The furnace remains the primary heat source until ambient temperature rises above 30º F. When operating in Heat Pump mode with ambient temperature between 30 to 42º F, a defrosting cycle begins approximately every 40 minutes of compressor operation. During the defrost cycle, the blower motor will stop for five minutes and the display will indicate **Defrost**. After the defrost cycle Heat Pump operation will resume.

If equipped with an Aqua-Hot this will need to be on when the Aux Heat cycle begins. Turn on the Aqua-Hot control switches. The exchanger blowers automatically begin operation in the Auxiliary Heat mode.

## *Operation*

**The roof air conditioner will operate only when the following needs are met:**

- 120 Volts AC, from either shore power or the generator, is supplied.
- The battery cut-off switch is in the **ON** position and house batteries are charged.

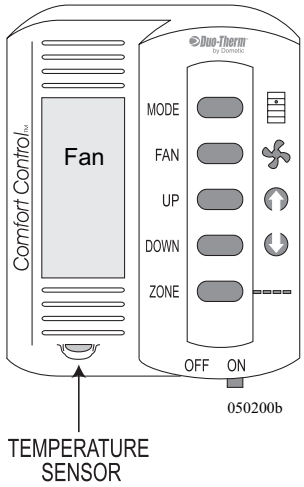


**Fan Operation:**
Circulates the interior air by using the roof air conditioner blower. The fan speed controls the roof air conditioner blower speed in the following modes: **Fan**, **Cool** or **Heat Pump**.

- Press the **MODE** button repeatedly until **Fan** is displayed.
- Press the **FAN** button to select the desired fan speed.

**Air Conditioner Operation:**
The living room comfort control operates the front roof air conditioner functions.

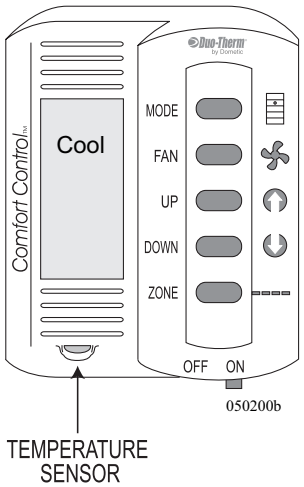


- Press the **MODE** button repeatedly until **Cool** is displayed.
- Set desired fan speed by pressing the **FAN** button.
- Set desired cooling temperature by pressing the **UP** or **DOWN** buttons.

**The Bedroom comfort control will operate the rear roof air conditioner functions and (if equipped) the center roof air conditioner.**

- Press the **MODE** button repeatedly until **Cool** is displayed.
- Press the **ZONE** button to alternate between Zone One and Zone Two. Zone One controls the bedroom roof air conditioner and Zone Two controls the center roof air conditioner.
- Set desired fan speed by pressing the **FAN** button.
- Press the **UP** or **DOWN** buttons to set desired cooling temperature.

**NOTE: The compressor will engage approximately two minutes after blower motor activation. This prevents accidental compressor activation against high pressure.**

## Heat Pump

The Heat Pump mode offers heat by using the air conditioner as a heat source. The air conditioning principle is reversed, supplying heated air to the ceiling registers instead of refrigerated air. There are ambient temperature limitations of the Heat Pump mode.

**NOTE: The roof air conditioner will not operate in Heat Pump mode with ambient temperatures at or below 24º F.**

If the **Heat Pump** mode is selected at or below 24° F., or if operating in Heat Pump mode and temperature drops to 24º F., the air conditioner will stop Heat Pump operation and **Aux Heat** will be displayed. The furnace will be selected as the auxiliary heat source and will begin operation. The furnace will remain the primary heat source until ambient temperature rises above 42º F. When ambient temperature is between 24 - 42º F., a defrost cycle is initiated approximately every 40 minutes of compressor operation. The blower motor will stop for five minutes and **Defrost** will be displayed. After the defrost cycle the heat pump operation will resume.

**Heat Pump Operation:**

- Battery cut-off switch must be in the **ON** position.
- Slide the **ON/OFF** switch to the **ON** position.
- Press the **MODE** button repeatedly until **Heat Pump** is displayed.
- Set desired fan speed by pressing the **FAN** button.
- Press the **UP** or **DOWN** buttons to set desired heating temperature.

4

## Return Air Filters

Clean the return air filters frequently. The filters are located inside the motorhome behind the intake vent covers. The covers hinge on the curbside with fasteners securing the roadside in place. Filters are secured in place with screws. Never run the air conditioner without the return air filters in place. This may plug the evaporator core with dirt and substantially affect the performance of the air conditioner.

**NOTE: To prevent scratching the mirrored surface when accessing filters, place a protective barrier, such as a cotton towel, between the mirrored surface and work area of any tools.**

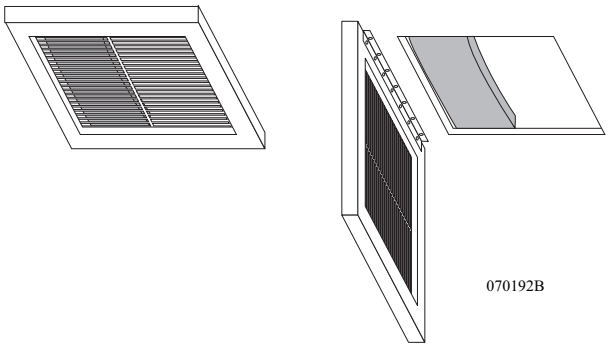


**To Clean:**

- Wash filters in warm soapy water. Do not use solvents.
- Rinse filters thoroughly with fresh water. Allow them to dry.
- Install filters and secure the intake vent covers.

## Auto Temp Start

The Auto Temp Start (ATS) will start the generator automatically when interior temperature rises to the temperature set point on the ATS control module. The generator will provide AC power to the roof air conditioners. This feature is useful when hot temperatures are expected and not hooked to shore power.

**ATS Control Module Features:**

- Adjustable temperature start between 65º and 85º F.
- Adjustable generator run time between one and five hours.
- Test button to confirm generator start up.

The temperature setting on the ATS control module is sensing interior temperature. When the set temperature is reached, the generator starts. With the Comfort Control on, and set to cool, the roof AC will attempt to maintain interior temperature. The time setting on the ATS control module will determine how long the generator will run before the ATS control module shuts the generator off.

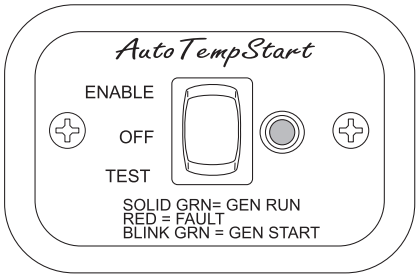


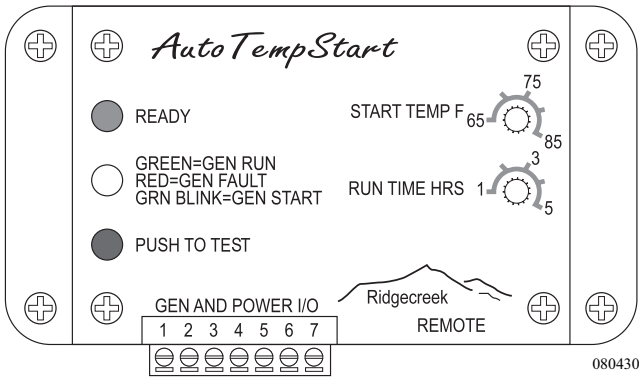


*The control module is located adjacent to inverter.*

**To Enable the System:**

- Set the desired interior temperature to start the generator on the **ATS** control module. The **Run Time** is preset at two hours; this should work for most situations. Push the **ATS** remote switch to **Enable**.
- Turn on the interior house power using the battery cut-off switch.
- Turn on the comfort control(s). Set the comfort control mode to **Cool**. Set one comfort control to the same temperature as the ATS control module. Set the other comfort control a few degrees higher, this allows one air conditioner a chance to maintain the desired temperature; if necessary, the other air conditioner will engage.

When interior temperature rises to the preset temperature on the ATS control module, the generator will start and supply AC power to the roof air conditioners. When the preset Run Time on the ATS control module is reached, the generator will shut off. If interior temperature has not been maintained, the ATS system will re-start the generator for another timed cycle. This on/off cycle will continue until interior temperature drops below the ATS control module set point or the system is turned off.

**NOTE: The ATS system does not affect manually starting or stopping the generator or any RC7 GS automatic generator start programming.**



**To Test the System:**

The ATS system should be tested after changing any settings or when the motorhome is removed from storage. To test the system, press and hold the switch to **TEST** for two seconds on the remote or press and hold the **TEST** button on the control module for two seconds. The status lamp should flash **green**; the generator will start and run for approximately one minute.

**Error:**

In case of system error, such as the generator not starting or stopping, the LED on the remote or the control module will illuminate Red. Turn the system off then back to **Enable**. It may be necessary to disconnect the 7-pin connector on the ATS control module. If the error remains, the fault may be in the ATS system or with the generator. Make sure the **green Power** indicator lamp on the control module is illuminated. To test the control module, unplug the remote cable (phone line) at the control module. Push and hold the **TEST** button. The status indicator lamp should flash **green**; the generator should start and run for approximately one minute then stop. If the generator starts, the problem may be in the ATS remote. Discontinue use if the generator fails to start or stop and have the system checked.

## FURNACE

The furnace and its related components are 12 Volt DC operated, using LP-Gas as the fuel source. Electronic circuitry (automatic ignition) is used to ignite the burner. The furnace uses outside air for the burner combustion and exhaust is expelled through the outside vent. Inside air is drawn into the furnace and blown across the internal heat exchanger. Heated air is then discharged through ducted hoses which can be run throughout the motorhome. A warm air discharge is incorporated to heat the holding tanks in the motorhome.

**CAUTION: Do not store any items/materials in furnace area. Restricted air flow may hamper furnace operation leading to failure and/or fire hazard.**

**WARNING: IF YOU SMELL GAS extinguish all open flames and turn off the main gas supply. Liquid propane is a highly volatile, extremely dangerous gas. It can explode or ignite, which may result in property damage, injury or death. Propane is "heavy" and can "float" on the floor or "hide" in corners. Open all windows and doors. Do not touch electrical switches. They may spark, which can ignite. Keep all open flames, spark producing devices and smoking material out of the area. Contact a qualified service center to have the problem correctly diagnosed and repaired before resuming operation.**

### *Operation*

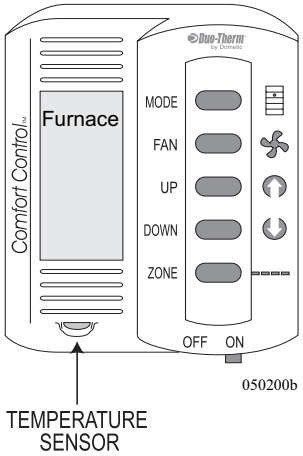


The furnace operates in the following manner: The wall thermostat sends a signal to the front roof air conditioner circuit board, which closes a relay. Closing a relay sends an electrical signal to the furnace to begin the ignition cycle. There is a small time delay before the blower motor begins. Once the blower motor attains a predetermined speed it will close the sail switch. The sail switch, which is now closed, sends the electrical signal through a high temperature protection switch, then to the automatic ignition circuit board. After the thermostat is satisfied, the gas valve closes and extinguishes the burner. The blower motor stops approximately two or three minutes after cool down.

**The furnace will operate when the following conditions have been met:**

1. The LP-Gas primary valve on the LP tank is open and the LP-Gas valve at furnace is on.
2. The house batteries in the motorhome are fully charged.

**NOTE: The automatic ignition circuit board will attempt to light the burner three times before the ignition board will go into "lock-out." If the burner does not light, the furnace blower motor will continue to run and the wall thermostat will have to be cycled off.**

## Using the Furnace

- Slide the **ON/OFF** switch (on wall thermostat) to the **ON** position.
- Select the **Furnace** mode on the Comfort Control using the **MODE** button.
- Select the desired temperature using the **UP** and **DOWN** arrow buttons.

**NOTE: The furnace mode of the bedroom thermostat is non-functional.**

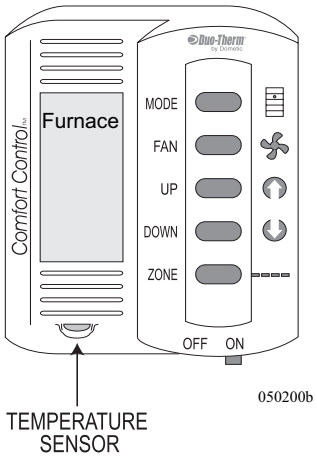


## Tips

- After storage the furnace may produce a musty smell during the first couple of cycles.
- Operating the furnace at an altitude above 5,000 feet reduces the BTU output due to air/fuel ratio.
- The furnace will periodically need to be serviced by a qualified technician. If the furnace exhibits unusual symptoms or noises, or has an unusual odor when operating, have the furnace checked or serviced.
- It is advisable to use the furnace to heat the inside of the motorhome during transit. Outside temperature can vary to extreme cold. The dash heater may not provide adequate heat to the interior.

**NOTE: When washing the exterior of the motorhome, avoid a direct stream of water into the outside furnace vents. This can cause damage to the furnace.**

## If the Furnace Fails to Light

If the furnace fails to light make sure the LP-Gas primary supply valves are open and the LP-Gas switch is turned on. The furnace will not light if the blower motor is not spinning to its specified speed. This may be due to a low house battery charge condition.

**To Charge the House Batteries:**

- Hook-up to shore power.
- Start the generator.
- Start the main engine to charge the batteries.

**WARNING: If you smell gas and the blower motor is spinning do not attempt additional furnace operation as this may result in an explosion, fire or personal injury. Contact a qualified technician.**

## WATER HEATER

The water heater will heat water using two different methods: (**1**) 120 Volt AC, supplied either by shore power or the on board generator, or (**2**) LP-Gas. The 120 Volt AC uses a heating element similar to that of a water heater typically found in a house. The 120 Volt AC method is efficient if shore power is available. The LP-Gas incorporates the use of an automatic ignition circuit board operated by 12 Volt DC. Two thermostats control water temperature: One for the 120 Volt and the other for the LP-Gas. The manufacturer presets the water temperature. Water is pumped into the bottom of the water heater tank where it is heated and discharged out of the top upon use. For easy winterizing, the water heater is equipped with a temperature and pressure safety relief valve, a by-pass valve and drain plug.

**NOTE: Do not operate the water heater by either function without water in the water heater tank. Damage to the thermostats and electric heating element can occur.**

### *Before Using the Water Heater*

Before using the water heater, purge all trapped air from the water system.

**To purge the air and pressurize the system:**

- Turn the water heater **Bypass Valve** to **Normal Flow**.
- Turn on the water pump or hook up to city water.
- After the system pressurizes, inspect the water heater for water leaks.
- Turn on the hot and cold valves for each water faucet, one at a time. Operate each faucet inside and outside of the motorhome. Run each faucet until a steady stream of water with no air bubbles or air pockets are present. Do not operate the water heater until the water system is purged of air.

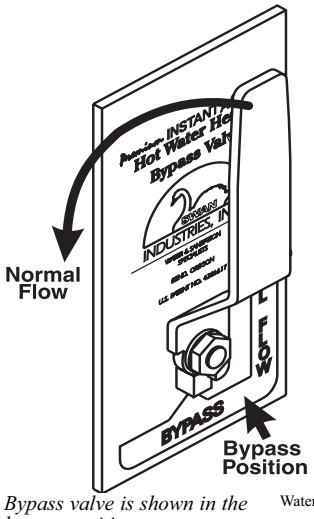


*Bypass valve is shown in the bypass position.*

Water Heater valve

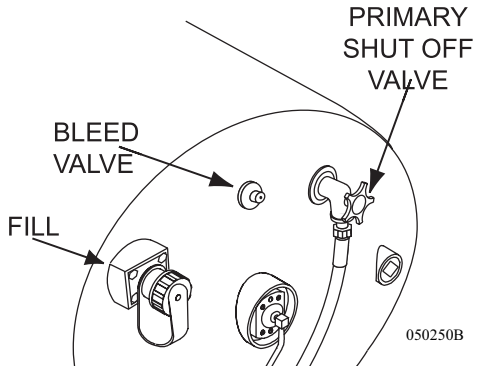


**WARNING: IF YOU SMELL GAS extinguish all open flames and turn off the main gas supply. Liquid propane is highly volatile, highly explosive and extremely dangerous. Explosion, fire, property damage, injury or death can result. Propane is a "heavy" gas and will lay on the floor and "hide" in corners. Open all windows and doors. Do not touch any electrical switches. They may cause a spark that can ignite. Evacuate the motorhome and shut off the LP Gas Primary valve. Contact a qualified service center to have the problem correctly diagnosed and repaired before resuming operation.**

**Water Heater Operation:**
- Turn on the battery cut-off switch at the entry door.
- 120 Volt AC is supplied from shore power or the generator.
- The house batteries are charged.
- The LP-Gas primary valve on the LP tank is open.

**Heating Water with 120 Volt AC:**
- Have either shore power or the generator supplying AC voltage.
- Turn on the water heater switch.
- Both gas and electric functions may be on at the same time. This will speed up the process of heating water for large volume use.

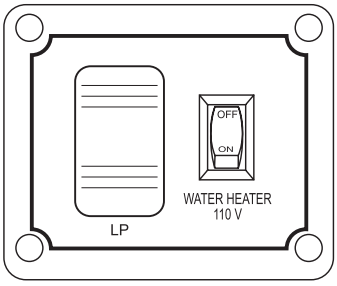

060177b

**Heating Water with LP-Gas:**
- Make sure the LP-Gas is turned on.
- Turn on the LP-Gas water heater switch. The water heater will make an audible "roar" from the burner when ignited.
- The indicator light on the switch will illuminate briefly, then go out when the water heater is lit. The indicator light will glow steady when the ignition cycle has gone into "lock-out."

**CAUTION: It is recommended not to operate the water heater on LP-Gas while the motorhome is in transit. Be sure the water heater is off before refueling.**

**NOTE: The automatic ignition circuit board will make three attempts to light the burner. If the burner does not light the ignition circuit board will go into "lock-out." Cycling the On/Off switch will reset the ignition board.**

**Ignition Module:**
The LP-Gas On/Off switch controls the ignition circuit to the water heater.

The indicator lamp illuminates under the following conditions:
- Upon initial start-up the lamp illuminates briefly, ignition occurs, and the lamp goes out.
- If the burner does not light within six to nine seconds, the ignition board will lock out and the indicator lamp will glow steady.

The next portion of the operation is controlled by the direct spark ignition (DSI) system, as power is applied to the DSI board. The system will do the following:

1. The board has a timing circuit, which allows six to nine seconds for ignition to occur.
2. Initially the board supplies current to the gas valve. At the same time, it produces a high-voltage current supply to the electrode to produce a spark at the burner.
3. The board will also confirm the presence of a flame.

If the flame is not sensed within six to nine seconds, the module board will go into lock out. Flame sensing is through the spark wire.

The Thermostat-Limit controls the power to the module board. At 130° F, the thermostat will open shutting off the burner. If the thermostat fails, the safety High Temperature limit switch will open, and requires manual resetting.

## *Water Heater Bypass System*

The bypass valve is located on the back of the water heater. Turning the valve to **BYPASS** diverts water away from the water heater. Place the valve in the **BYPASS** position when winterizing. Bypassing the water heater prevents water or antifreeze from entering the water heater. For normal operation, turn valve so that handle points to **NORMAL FLOW**.

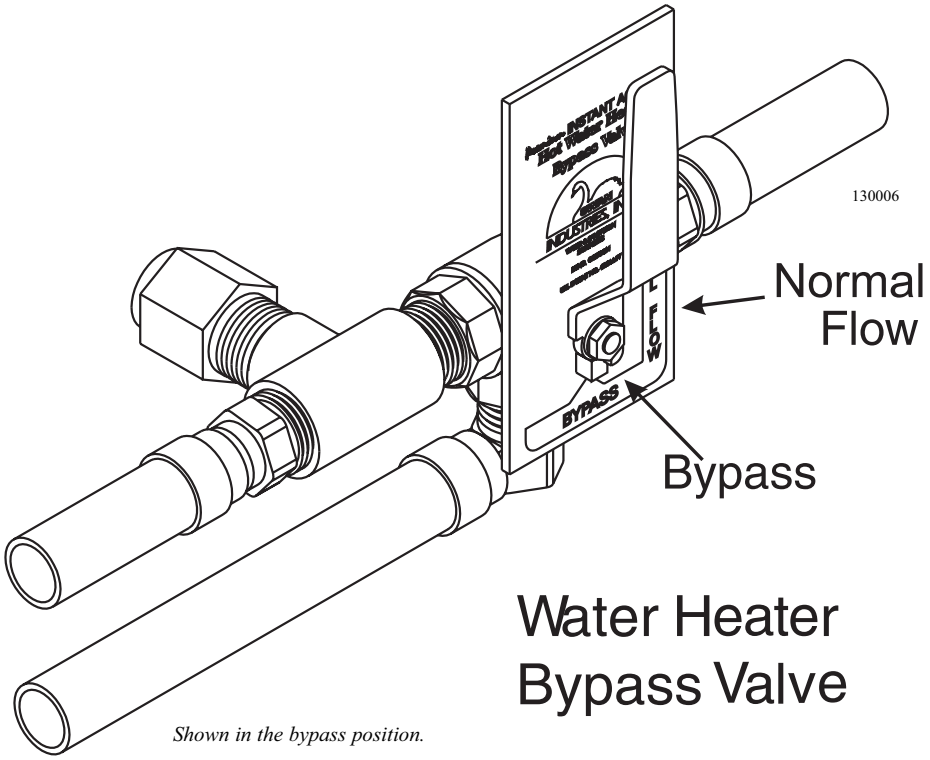


*Shown in the bypass position.*

## Pressure - Temperature Relief Valve

The water heater is equipped with a Pressure-Temperature relief valve. The water heater may discharge at the Pressure-Temperature relief valve during the heating cycle, due to thermal expansion of water. The Pressure-Temperature relief valve is designed to open if the water temperature in the tank reaches 210° F (98.8° C), or if internal pressure reaches 150 psi. A small discharge is normal and is not necessarily a faulty valve. The water heater has an internal air pocket to reduce the possibility of dripping or weeping.

Eventually, the expansion of the water will absorb the air pocket. When this occurs, the air pocket will have to be replaced utilizing the following procedure.

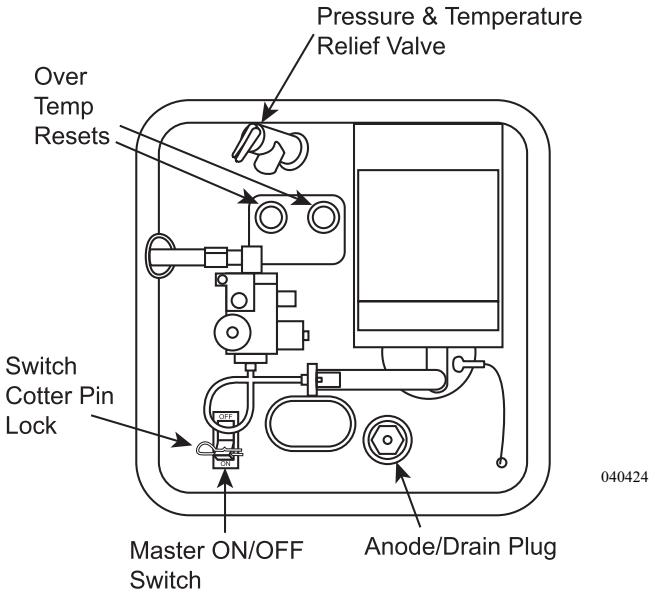


**CAUTION: Ensure the water heater tank is cool prior to making any check of the valve.**

**To Re-establish the Air Pocket:**

1. Turn OFF the water heater.
2. Shut OFF the incoming water supply.
3. Open the hot water faucet closest to the water heater.
4. Pull the handle of the relief valve until the flow of water stops.
5. Close the relief valve allowing it to snap shut. Close the hot faucet and turn ON the water supply.
6. Turn ON the water heater.

The air pocket is re-established and the process does not need to be repeated until the next discharge of water from the P & T valve. If the discharge does not stop, contact a qualified service center to evaluate the valve and make any required repairs.

## Burner Compartment

Periodically check the outside service compartment and screen (in the door) for foreign material the can accumulate preventing the flow of combustion and ventilating air.

**INSPECTION:** Inspect the travel latch during the walk-around inspection.

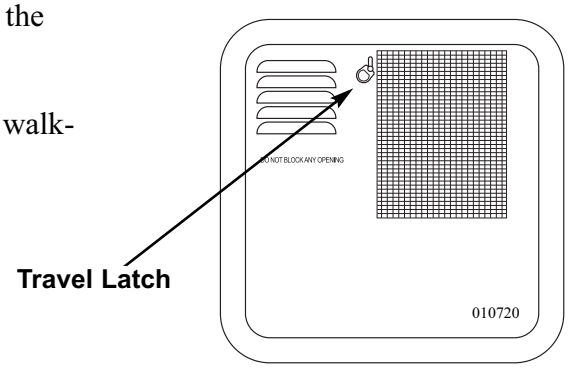

## Tips

- To conserve LP-Gas, turn off the water heater when not in use.
- When using the shower, conserve energy and hot water by shutting the shower water off when not in use.
- Use caution when adapted to 30 Amp shore service, or anything less than 50 Amps. When the water heater element is in operation it will use approximately 12 Amps. Appliances may need to be operated in sequence to avoid tripping a breaker.

The temperature and pressure (T & P) safety relief valve on the outside of the water heater is set to open at 210° F or 150 psi. When water temperature and pressure reach these settings the valve may drip until the pressure has dropped. Avoid opening the T & P valve manually as it may continue to leak. The valves can be purchased from most hardware stores.

**WARNING: Before beginning any service or work on the water heater make sure the LP-Gas is turned off, the 120 Volt AC source has been disconnected and the 12 Volt DC source has been disconnected. If hot, give water time to cool. Failure to do so can result in explosion, fire or injury.**

## Draining & Storage

If the motorhome is to be stored for a long period, or during the winter months, drain the water heater to prevent freeze damage.

1. Turn off the electrical power to the water heater.
2. Shut off the LP-Gas supply to the water heater.
3. Open low point drains.
4. Open both Hot and Cold on all faucets.
5. Turn the Bypass lever to **BYPASS**.
6. Remove the drain plug to allow the tank to drain.

**NOTE: Be sure to refill the water heater with water before resuming operation.**

**CAUTION: The water heater must be cool before draining.**

## Troubleshooting

- If water heater fails to light check the outside burner tube for obstructions. Spiders may make nests in the burner tube.
- If the indicator light on the switch does not light and the water heater does not light, ensure the battery cut-off switch at the entry door is on or check for a blown fuse in the house distribution panel.

## AQUA-HOT (Optional)

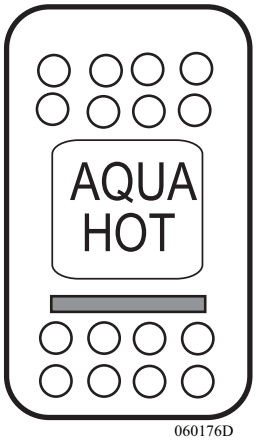


Specially designed for use in motorhomes, the Aqua-Hot is an appliance combining a water heater with a furnace. The Aqua-Hot provides an almost endless supply of hot water and heats the interior of the motorhome. A 50,000 BTU diesel fired burner and a 1650 watt AC element heats a 60/40 solution of antifreeze to approximately 200º F. Using three pumps, the antifreeze solution circulates through heat exchangers located throughout the motorhome. A fourth pump circulates engine coolant through the Aqua-Hot. Fresh water heats when pumped through a coil tube inside the Aqua-Hot.

**CAUTION: If not properly and thoroughly rinsed, bleach or other concentrated chlorine bearing chemicals can cause failure to the copper tubing inside the Aqua-Hot domestic Water Loop. The rating for the Aqua-Hot copper tubing is for fresh water and winterizing solutions only. Periodic flushing with common household chemicals, including bleach, has little or no effect on the heating system if properly rinsed with fresh water afterwards. Failure of copper tubing, especially soft or flexible copper, can result if materials other than water or winterizing solutions are allowed to reside inside the piping for extended periods as during storage or other periods of non-use. The most common cause for failure is due to an extended exposure to chlorine, solutions containing chlorine (i.e. bleach) or hydrochloric acid.**

**NOTE: The Aqua-Hot must be turned ON before using any heat feature.**

**Diesel Burner:**

The diesel burner will consume approximately ½ gallon of diesel for each hour of continuous burner operation. The diesel burner is rated at 12 Volt/65 watts. Circulating pumps rated at 12 Volt/ 12 watts each. The diesel-fired burner has a fast recovery rate. To heat the Aqua-Hot from the diesel burner turn the switch to the **ON** position. The switch will illuminate when the Aqua-Hot is ON. Allow 20 to 30 minutes for the Aqua-Hot to reach operating temperature before operating heat exchangers or using hot water.

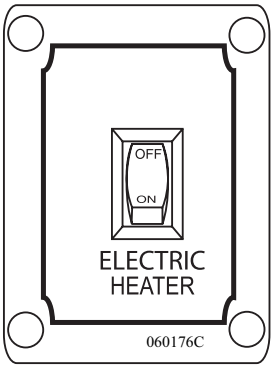


**Electric Heat Element:**

The electric element works well if plugged into 50 Amp service. When plugging into less than 50 Amp service, exercise care not to overload the electric service provided. The rate of recovery of the electric element is slower than the diesel burner. When the switch is turned on a relay closes in the 120 Volt AC panel sending power to the electric element in the Aqua-Hot. Allow two to three hours for the Aqua-Hot to reach operating temperature when operating from the electric element.

**Interior Heat Exchangers:**

The heat exchangers are small radiators with 12 Volt DC blower motors. Current consumption is approximately ½ Amp per large heat exchanger. The small heat exchanger used in the private bath and for the holding tank bay is ¼ Amp.

**Engine Preheat:**

The Aqua Hot system has an engine preheat feature to aid in starting in cold or frigid weather. Inside the Aqua Hot are an engine coolant loop and an engine coolant pump. The Aqua Hot will heat the engine coolant and the internal engine pump will circulate the heated coolant through the engine.

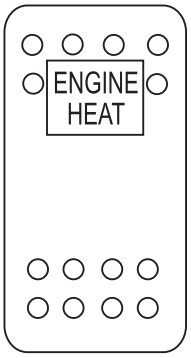


**To Use the System:**

- Turn the Aqua-Hot switch to the **ON** position.
- Turn the Engine Heat switch to the **ON** position. This activates the engine pump inside the Aqua Hot. The time required to preheat the engine varies with ambient temperature. Allow at least three hours of engine pre-heat time.

**Engine Heat Exchange System:**

When traveling, the water pump on the engine circulates heated engine coolant through the Aqua Hot. Through convection, the heat transfers to the Aqua Hot coolant, providing hot water and interior heating. Use the Comfort Control to operate the heat exchangers.

**To Use the System:**

- Turn on the Battery Cut-off switch at the entry door.
- Set the Comfort Controls to Furnace.
- Select the desired Zone and Temperature.

**NOTE: All Zones must be in the same mode for the HVAC (Heating, Ventilating, Air Conditioning) system to function correctly. DO NOT set Furnace mode in one Zone and Cool mode in another Zone.**

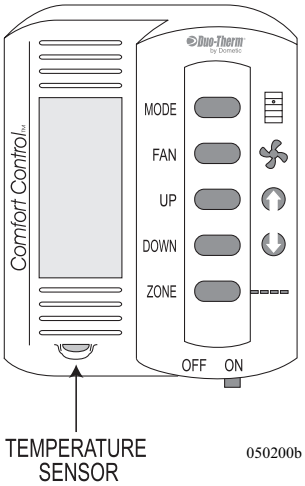

## Bay Thermostat

During cold weather, locate the bay thermostat next to the Aqua-Hot. This thermostat controls the heat exchanger for holding tank bay heat. Adjust the thermostat to 40 to 50° F. This will help prevent freezing of the water system.

**NOTE: Turn the Aqua-Hot ON when heating the bay.**

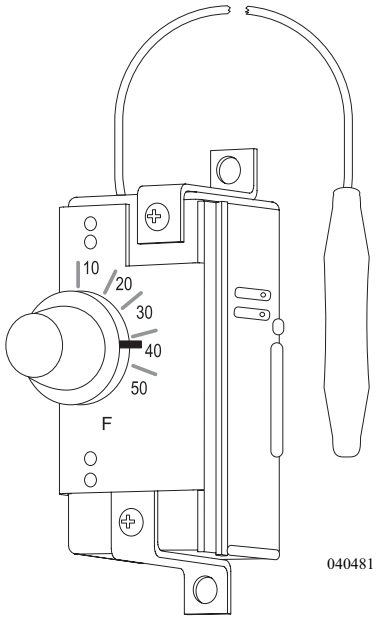


*Bay thermostat located next to Aqua-Hot*

## Coolant Tank

**Monthly:**

Check the Aqua-Hot's 70/30 solution of water and antifreeze to ensure its proper level. Visually inspect the coolant level in Aqua-Hot's expansion tank when the Aqua-Hot is at operating temperature. Adding solution to the expansion tank when the unit is cold will result in a solution overflow when the Aqua-Hot attains normal operating temperature. The expansion tank is located behind the fuel door.

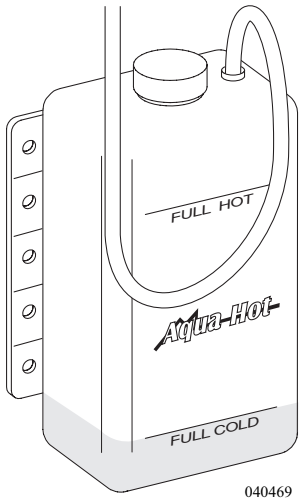


**Annually:**

Have the Aqua-Hot tuned up yearly. A tune up consists of a fuel nozzle and fuel filter replacement, as well as a thorough cleaning of the combustion chamber. This simple tune up will keep the Aqua-Hot running smoothly throughout the year, as well as allow service personnel to inspect for additional wear of other components. Signs that the Aqua-Hot may need servicing are continuous white exhaust smoke or poor ignition start up. When in operation, the Aqua-Hot should have a smooth, high-pitched whine. Loud growls or other abnormal noises indicate service or repair is required.

**CAUTION: Before cleaning or servicing disconnect all power supplies.**

**INFORMATION: For more details about the Aqua-Hot system, see the Owner's Information Packet.**

## Filter/Water Separator

**Aqua-Hot Fuel Filter:**

The filter is located on the curbside of motorhome behind the fuel access door. Unlatch and securely position door open.

**Draining the Collection Bowl:**

Water is heavier than fuel and will settle to the bottom of a fuel bowl, making it appear different in color. In high humidity environment, check the collection bowl more often. With the engine and the Aqua-Hot off, open the drain to evacuate any contaminants, then close it.

**Element Replacement:**

The contamination levels in the fuel determine the element's replacement frequency. Fuel flow to the Aqua-Hot becomes restricted as the element gradually plugs up with contaminates, resulting in noticeable heating loss and/or hard starting. If this occurs, change the element as soon as possible.

As a guideline, change the element every 500 hours, annually or at first indication of heat loss, whichever occurs first. Always carry an extra replacement element as one tank of contaminated fuel can plug a fuel filter. Replacement filters must have a 10-micron rating.

**Racor filter - Aqua-Hot R2TRA000T ten micron.**

**To Replace the Element:**

- Open the drain valve to drain the filter unit.
- Spin bowl/element from head and remove element.
- Coat new seals with motor oil and install the new element.
- Prime bowl/element with clean fuel.
- Spin bowl/element onto head and tighten firmly by hand.
- Start Aqua-Hot and check fuel filter for leaks.

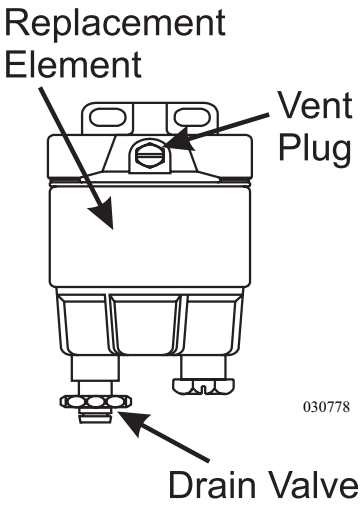

## Aqua-Hot Overall View

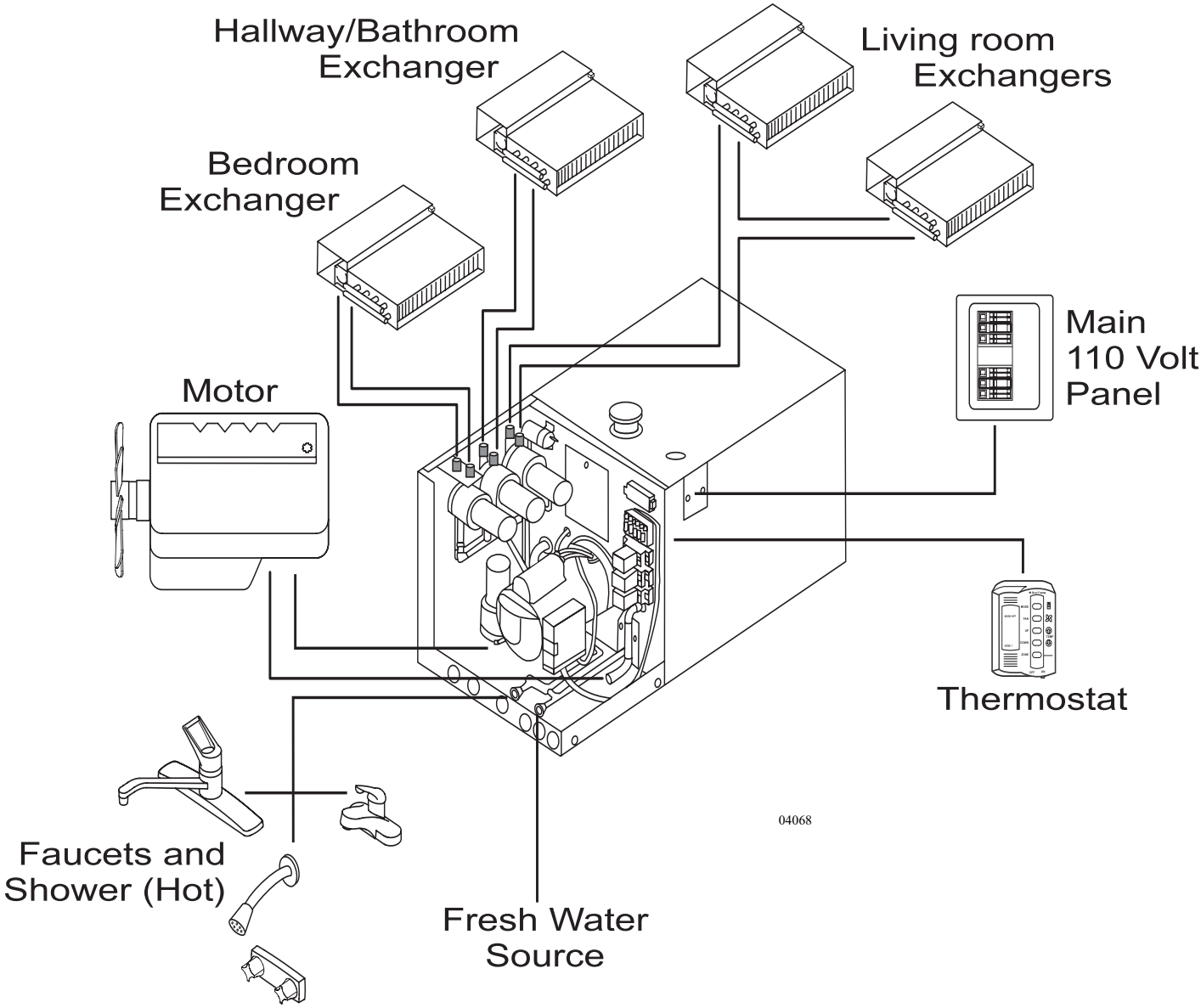

## ELECTRIC BASE-BOARD HEATER (Optional)

The baseboard heater operates from 120 Volts AC supplied by shore power or the generator. An adjustable thermostat and remote switch controls the operation of the heater.

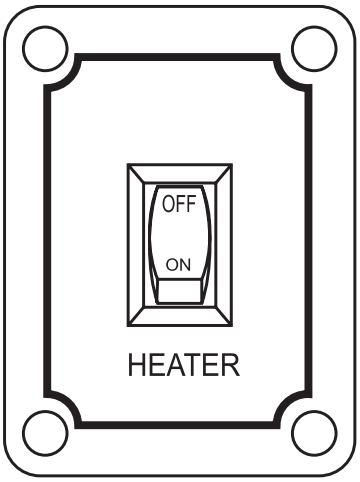


030942B

**To Operate the Heater:**

- Hook to shore power or start the generator.
- Adjust thermostat to desired setting.
- Turn on the Heater switch.

**NOTE: The heater is rated at 1000 watts or 8.8 Amps. Use care when hooked to anything less than 50 Amps service.**

**Tips:**
If heater operation discontinues or fails to operate, check the power supply. If the heater still does not operate, the **Temperature Overload Switch** may be tripped.

**To Reset the Overload Switch:**

- Turn off power supply.
- Remove grille to access the Overload switch.
- Using a pencil or small screwdriver, press the red Reset button down.

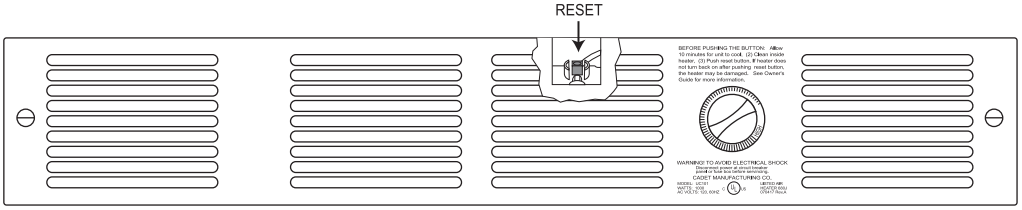


030939

BEFORE PUSHING THE BUTTON: Allow 10 minutes for unit to cool, (2) Clean inside heater. (3) Push reset button. If heater does not turn back on after pushing reset button, the heater may be damaged. See Owner's Guide for more information.

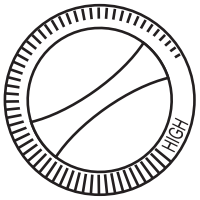


WARNING! TO AVOID ELECTRICAL SHOCK
Disconnect power at circuit breaker panel or fuse box before servicing.
CADET MANUFACTURING CO.
MODEL: UC101
WATTS: 1000
AC VOLTS: 120, 60HZ
LISTED AIR HEATER 680J
070417 Rev.A

030940

## WASHER-DRYER PREPARED

If the motorhome was not ordered with an optional washer-dryer, it will have a washer-dryer preparation package installed from the factory. The washer-dryer "prep" package includes the following items:

1. Color coded water supply lines. A red line for hot; a blue line for cold.
2. A 1½ in. waste water drain line with threaded cap, P-trap, and an automatic vent cap. This will drain the waste water into the grey water holding tank.
3. A 120 Volt receptacle located in the compartment.

**NOTE: Sidewall dryer vents are not part of the prep package. If a sidewall vent is to be installed, properly seal vent to sidewall.**

If a washer-dryer is to be installed at a later date, follow all the manufacturer installation instructions. Listed here are further instructions which should be adhered to for safe and reliable operation:

- Do not connect the clothes dryer exhaust duct to any other duct, vent or chimney.
- Do not terminate the exhaust duct beneath the motorhome.
- Use proper length fastener when attaching exhaust vent to exterior sidewall. Stainless steel fasteners are best suited for this as they will not rust.
- If the cabinet or closet in which a washer-dryer is installed does not have vented louvered doors, the manufacturer's installation instructions may require installation of vented doors or vents to be installed in the doors. This is for sufficient circulation of air.

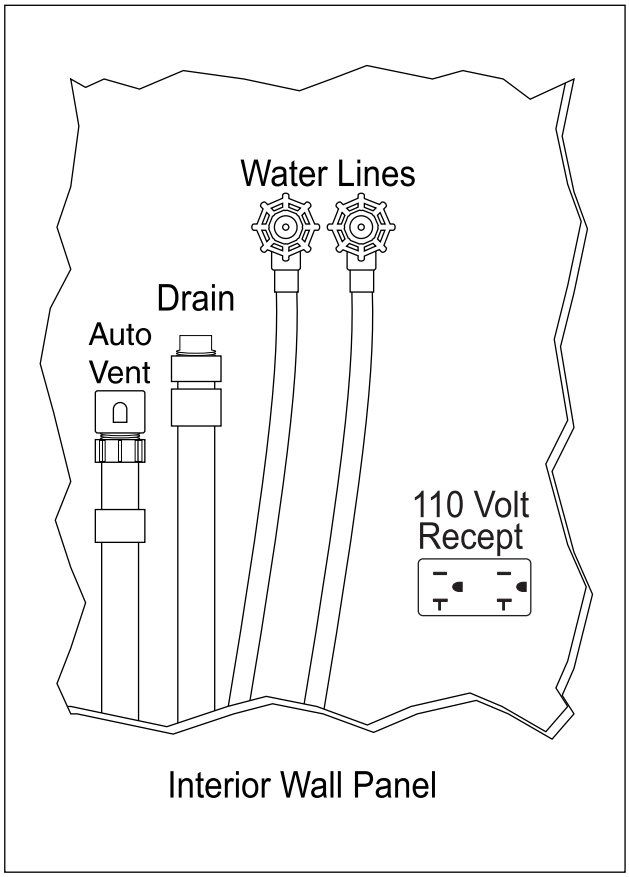


Location of specified parts may vary within wall panel depending on floor plan and model.

040495

## WASHER-DRYER

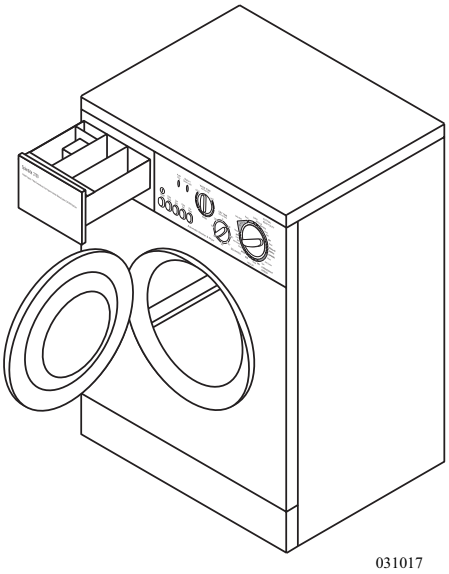


The automatic washer-dryer has a capacity of up to 12 lbs. of dry clothing. It is front loading with an extra large door opening for easier access. Several wash and dry programs are available along with variable water temperature settings.

- The washer-dryer operates on 120 Volt AC from shore power or the generator.
- The washer-dryer will use approximately 12 to 20 gallons of water per wash cycle.

**INFORMATION: The washer-dryer has many features. Refer to the manufacturer's manual in the owner's information file for detailed operating instructions.**

**WARNING: Open a window or vent while operating the dryer. The washer-dryer can create negative air pressure inside the motorhome that can accumulate Carbon Monoxide or LP-Gas while operating fuel-burning appliances.**

**CAUTION: Do not use the washer-dryer while traveling. Suspension movement, combined with the weight of the drum while in the wash cycle, can damage the internal components of the washer-dryer.**

### *Test Procedure*

Before using the washer for the first time, after winter storage or a long period of non-use, it is a good idea to conduct this simple test procedure prior to loading the machine for use. This procedure will verify all the hardware and electronic components are functioning properly. Wipe the inside and outside with a damp cloth to remove any travel dust that has accumulated.

**NOTE: Perform this test before putting the washer-dryer in use for the first time or after the winter months. This will clear the water lines and drum of winterization antifreeze.**

**Test Procedure Requirements:**

- Make sure water lines are secure and water valves are open.
- Hook to city water or turn on the water pump.
- Hook to shore power or start the generator.

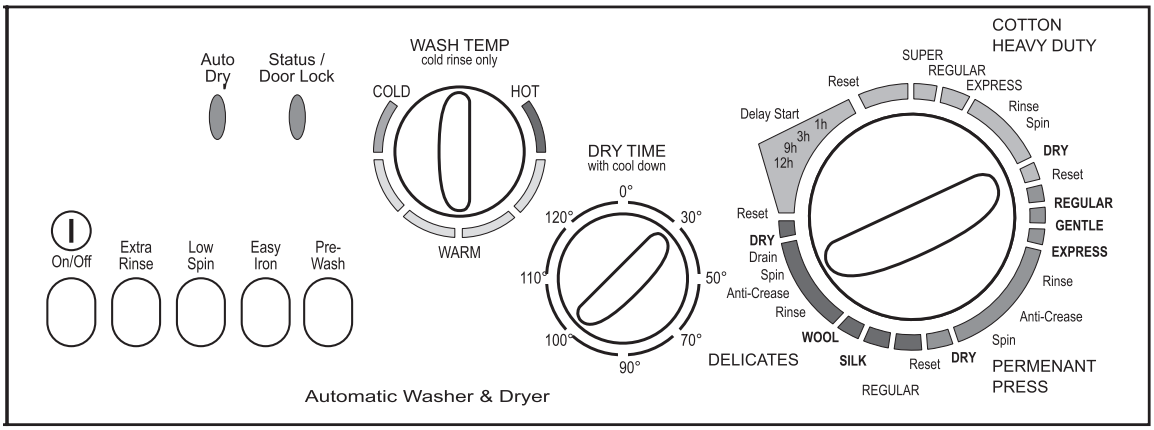


031017

**To Conduct the Test Procedure:**

1. Set the selector knob to **Reset**.
2. Set the **Dry Timer** knob to 30 minutes. Push the **On/Off** button to **On**. Wait five seconds. The **Auto Dry** light should be on and the **Status** light flashes fast then slow.
3. Set the selector knob to a wash cycle. Set **Wash Temp** knob to **Warm**. Water should be flowing into washer and drum should rotate both directions.
4. Set the selector knob to **Reset**. Wait five seconds.
5. Set the selector knob to **Spin**. Water should drain and drum rotation should speed up.
6. Set the selector knob to **Reset**. Wait five seconds.
7. Set the selector knob to **Dry**. Dryer fan should begin and drum should rotate both directions.
8. Set the selector knob to **Reset**. Wait five seconds.
9. Set the **Dry Time** knob to zero. The **Auto Dry** light should go off.
10. The door will unlock in two minutes or less. The **Status** light flashes fast then slow. The door should now open.
11. Push the **On/Off** button to **Out** (Off) position. The **Status** light should be off.

**WARNING: Do not wash or dry articles that have previously been cleaned, washed, soaked or spotted with gasoline, dry cleaning solvents or other flammable or explosive substances. They give off vapors that could ignite or explode. Do not add gasoline, dry cleaning solvents or other flammable or explosive substances to the wash water. Do not use heat to dry articles containing foam rubber or similar textured, rubber-like materials.**

**To begin a wash load:**

- Sort and pre-treat clothes.
- Add the measured amount of detergent suggested by the package directions (maximum two tablespoons).
- Load the clothes loosely into the washer. Close the washer door.
- Turn the Wash Temperature knob to the desired temperature setting.
- Choose the desired washing cycle option using the Selector knob.
- Load wash tray with detergent.
- Turn the power ON.
- After the cycle is complete, wait two minutes for the door lock to release before attempting to open the door.

## *Washer-Dryer Maintenance*

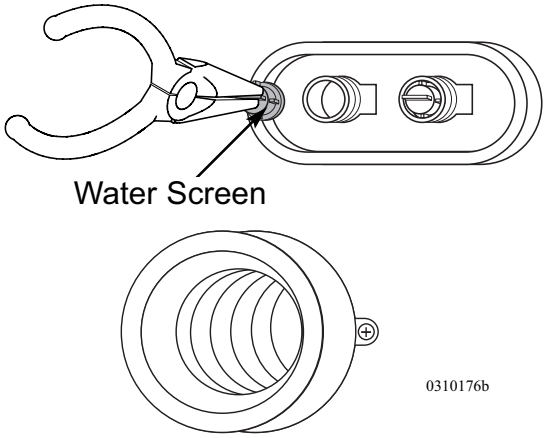


Occasionally wipe the exterior cabinet of the washer-dryer with a damp cloth or sponge. Wipe dry with a soft cloth. Do not use polish on plastic trim. In areas of hard water, detergent can accumulate in the drum. Obtain a packaged water softener. Add quantity as specified by the manufacturer directly to the drum. Run the washer through a complete cycle using hot water. Repeat the process if necessary. Remove hard water deposits using only cleaners labeled as washer safe. Wipe the inside of the washer-dryer door with a soft cloth to remove moisture. Periodically apply a thin coat of paste wax to the inner door, especially to the area that is immediately next to the door window. This will protect the door finish from laundry spills and discoloration.

If water flow to the washer-dryer is reduced, the Hot and Cold water inlet screens may be clogged. Remove water pressure and undo water lines at the back of the washer-dryer. Use tweezers or pliers to remove screens from fittings. Clean and install screens and water lines. Hook to city water or turn on the water pump. Check for water leaks before using the washer-dryer.

**NOTE: Should the washer-dryer need removal for service, care should be taken as the washer-dryer weighs approximately 170 lbs. Proper accommodations should be made to avoid risk of injury or damage to the cabinetry.**

**To Winterize the Washer Dryer with Air Pressure:**

1. Hook an airline (regulated to 45 psi or less) to the water inlet of the motorhome.
2. Rotate Selector knob to a wash position with the Wash Temp setting on Warm. Press the power button to On. Air pressure will clear the Hot and Cold water lines.
3. After water lines are clear, rotate Selector knob to Spin. Allow the pump to drain the drum.
4. Set Selector knob to Reset and Timer to zero. The door will unlock in two minutes or less. Open door and pour in ¼ gallon of RV antifreeze.
5. Set Selector knob to Spin. The pump will prime with antifreeze. Set selector knob to Reset and turn the power off.



**To Winterize the Washer Dryer Using RV Antifreeze:**

Two methods of introducing antifreeze to the water system can be used. Add antifreeze directly to the water tank or use a separate container of antifreeze with water line hooked to the intake side of the water pump.

1. Turn on the Water Pump. Rotate Selector knob to a wash position with the Wash Temp setting on Warm. Press the power button to On. Allow antifreeze to enter the drum.
2. After water lines are filled with antifreeze, rotate Selector knob to Spin. Allow the pump to drain the drum.
3. Set Selector knob to reset and Timer to zero. The door will unlock in two minutes or less. Turn the power off.
4. Any remaining liquid should contain a sufficient amount of antifreeze to be protected from freezing.

**NOTE: After winter, perform a Test Procedure before washing or drying any laundry to make sure all antifreeze has purged.**

## DISHWASHER (Optional)

The dishwasher optimizes water use, requiring as little as 1.8 gallons of water and averaging 2.4 gallons for a standard wash cycle. The dishwasher uses variable water pressure, specific temperatures (up to 165° F) and a flexible racking system.

The dishwasher compartment has the capacity to hold:

| | |
|---|---|
| 7 dinner plates | 7 soup bowls |
| 7 place settings of cutlery | 7 dessert plates |
| 7 saucers | 7 cups |

**Requirements for Dishwasher Operation:**

- Power requirement is 120 Volts AC 15 Amp supplied by shore power or the generator.
- Hook to city water or turn on the water pump. Inlet water pressure is 4.3 psi (minimum) to 120 psi (maximum).
- The motorhome must be level.

**To Operate the Dishwasher:**

1. Load the dishes - Remove all scraps of food and load dishes. Wash water comes from the spray arm. As the arm rotates, wash water will be provided to all areas. Care needs to be taken when loading the dishes. Ensure there is sufficient space and room for the water to reach all areas.

2. Add detergent and rinse agent - Located inside the dishwasher, the dispenser has two compartments, pre-wash and main wash. Both compartments have markings on the inside for precise measurements. The pre-wash markings are in 1 tsp increments. The main wash compartment markings are in 2 tsp increments.

**NOTE: Use only powdered detergent. Liquid and Tablets are not recommended for use. It is highly recommended to regularly use a liquid rinse agent as it offers the best drying results. The rinse agent dispenser is located inside the dishwasher holding approximately 1.7 fluid ounces of rinse agent.**

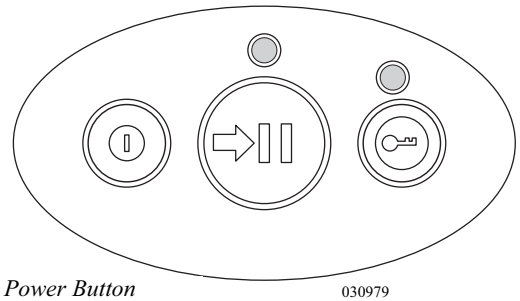

*Power Button* 030979

3. Press the **Power Button** - Turns ON or OFF the dishwasher. Pressing the Power button in mid cycle will end the wash program and water will be pumped out. Opening the door will automatically power up for 30 seconds ONLY.

4. Select the Wash Program - Select the desired wash program. Standard programs are Heavy, Normal, Fast, Delicate and Rinse.

030980

5. Check the compartment - Ensure the drain filter is flush with the filter plate and the spray arm can rotate about the center easily.

6. **START** - Close the dishwasher and press the **START/PAUSE** button to begin wash program. **PAUSE** - Press the **START/PAUSE** button and wait for three beeps prior to opening. Simply press the **START/PAUSE** button to restart.
7. Finish - Six beeps indicates the end of the wash program. The drying fan will continue to run for a set time or until the door is opened.

**NOTE: It is normal for some water to remain in the drain filter area after the wash program is complete.**

**NOTE: In the event the dishwasher is operating and a power outage occurs, the dishwasher will stop and may not open at this time. When power is restored, the dishwasher will resume the wash program.**

**Preparing the Dishwasher for Storage:**

If the dishwasher is not used for an extended period, it is recommended to ensure the baskets are empty. Clean and dry the inside compartment. Leave the door ajar to allow air circulation. Shut off both power and water supplies to the dishwasher.

**NOTE: For Winterization of Dishwasher, refer to the Dishwasher Manufacturer's owners manual.**

# ~ NOTES ~

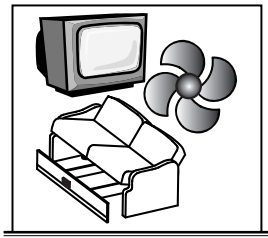

# Equipment
## Section 5


**EQUIPMENT - INTRODUCTION .....237**
**ENTRY STEP .....237**
Operation .....237
Tips .....238
Stepwell .....240
Adjustments .....241
**ENTRY DOOR .....242**
Latch Adjustments .....242
Screen Door - Changing the Glass .....243
Screen Door - Adjusting .....243
Screen Door - Removing the Screen .....243
Door Bell .....244
**KEYLESS ENTRY .....246**
Bay Doors - Unlock .....249
**SLIDE-OUT OPERATION .....250**
Main Room Slide-out .....251
Bedroom Slide-out .....255
Manual Override - Bedroom Slide-out .....256
**AWNINGS .....258**
Front Door Awning .....258
Patio Awning .....259
Girard Awning (Opt.) .....262
Tips .....265
Carefree Automatic Awning (Opt.) .....266
Slide-Out Awning .....268
Window Awning - Girard .....270
Slide-Out Cover .....271
**FANS .....272**
Exhaust Fan .....272
Bathroom Fan .....272
**PRIVACY DRAPERY - ELECTRIC (OPT.) .....273**
**DOOR - SLIDING .....274**
**SEAT CONTROLS .....274**
Seat Swivel .....275
**SOFA BED CONVERSION .....275**
**DINETTE BED CONVERSION (Opt.) .....276**
**STORAGE - UNDER BED .....276**
**SUPER SLIDE (Opt.) .....277**
**RADIO, NAVIGATION & ALADDIN™ SYSTEM .....278**
**RADIO & NAVIGATION SYSTEM (Opt) .....279**
Operation .....280
Back-up Camera Operation .....281
Radio Operation .....281
Navigation System .....282
**CITIZEN BAND RADIO (CB) .....286**
CB Components .....286
Operating Procedures .....287
Transmission .....288
Standing Wave Radio .....289
Weather Alerts .....290
**CELL PHONE ANTENNA .....290**
**ENTERTAINMENT SYSTEMS .....291**
Television (Front) w/Lock-out Feature .....291
Hook-ups - TV Cable, Computer & Telephone .....291
**HOME THEATER COMPONENTS .....292**
Flat Screen LCD - Front TV .....292
Plasma Front TV (Opt.) .....292
**RADIO - BEDROOM .....293**
Bedroom TV .....294
Shore Cable/Roof Antenna Selector Switch .....295
DVD Player .....295
Plasma TV Operation .....296
VCR (Plasma TV Only) Operation .....299
Operating the Components .....300
**UNIVERSAL REMOTES .....306**

## EQUIPMENT - INTRODUCTION

This section covers the basic operation and care of various types of equipment found in the motorhome, most of which are provided for entertainment and comfort. More detailed information about specific equipment may be found in that particular manufacturer's manual. Optional equipment will also be discussed in this section which may not apply to all motorhomes.

**Detailed information with CAUTION or WARNING instructions for the various electronics, other than what is provided in this section, can be found in the manufacturer's manual.**

## ENTRY STEP *- Operation*

The entry step, made up in two parts, includes the exterior electric entry step which features retractable steps, amber lighting under the step, automatic retraction with the ignition key in the RUN position and a last out feature. Located to the right on the dash, just inside the entry door, is the step switch. The uppermost step has a **storage compartment** w/removable tray. The storage can be utilized to store frequently used items such as, gloves (for refueling), tire pressure gauge, flashlight or outside slippers.

**NOTE: If dry camping it is important to notice the bar light on the step switch. If illuminated all step circuits are active and drawing current from the chassis battery.**

**Operating the Entry Step:**

1. With the entrance door open, turn the step switch on.
2. Close the door. The step should retract and lock in the **UP** position. The step light will remain on.
3. Open the door. The step should extend and lock in the **DOWN** position with the under step light on. The step will retract when the door is closed.
4. The step is equipped with a power switch. When the switch is turned off, the step should remain in the extended position with the door closed and the under step light off. Close the door and turn on the ignition switch. The step will retract for travel.
5. With the power switch off, the step extended, the entrance door closed and the ignition turned on the ignition override system will go into effect and the step will automatically retract.
6. Turn the ignition off and open the door. The step will extend and lock in the **DOWN** position. This is the "last out" feature. When the ignition is on the step will always activate with the door movement, regardless of the power switch position.

*Tips*

**If the step fails to operate:**

- Verify that the step switch is **ON**.
- Check the main power supply for the step, a 20 Amp circuit breaker located on the low current plate.
- A magnetic door jam switch is used to control step operation. Use a separate magnet to apply a "trigger" to the door jam switch. Rotate test magnet to align polarity field.
- A 7 ½ Amp ATO blade fuse is used to illuminate the **STEP OUT** dash warning light. The fuse is located on the front run box.

**WARNING: If the motorhome is driven with the step in the extended position there is the possibility of causing major damage to both the step and the motorhome.**

**Lubrication:**

Lubrication maintenance is essential to keep the step operating smoothly and reliably. Thoroughly clean the step before performing lube maintenance. This may require using a stiff nylon bristle-brush and automotive detergent. Allow the step to thoroughly dry. Use Kwik Lube Spray Lubricant or equivalent every 30 days on all pivot points, rotating linkages and slide mechanisms.

**CAUTION: Keep fingers, clothing and other hardware away from moving components.**

- Apply lubricant to all points in illustration.
- Operate the step several times to allow lubricant to penetrate surfaces. Repeat lubricant application.
- Extend step and clean excess lubricant to reduce road grime accumulation.

**NOTE: Clean and lubricate step more frequently in adverse weather conditions. Mud, snow, road salts and sand quickly breaks down lubricants and corrodes painted surfaces.**

**NOTE: Silicone lubricants and WD-40 are not recommended as they evaporate and are not weather resistant. Moving components are then susceptible to the elements.**

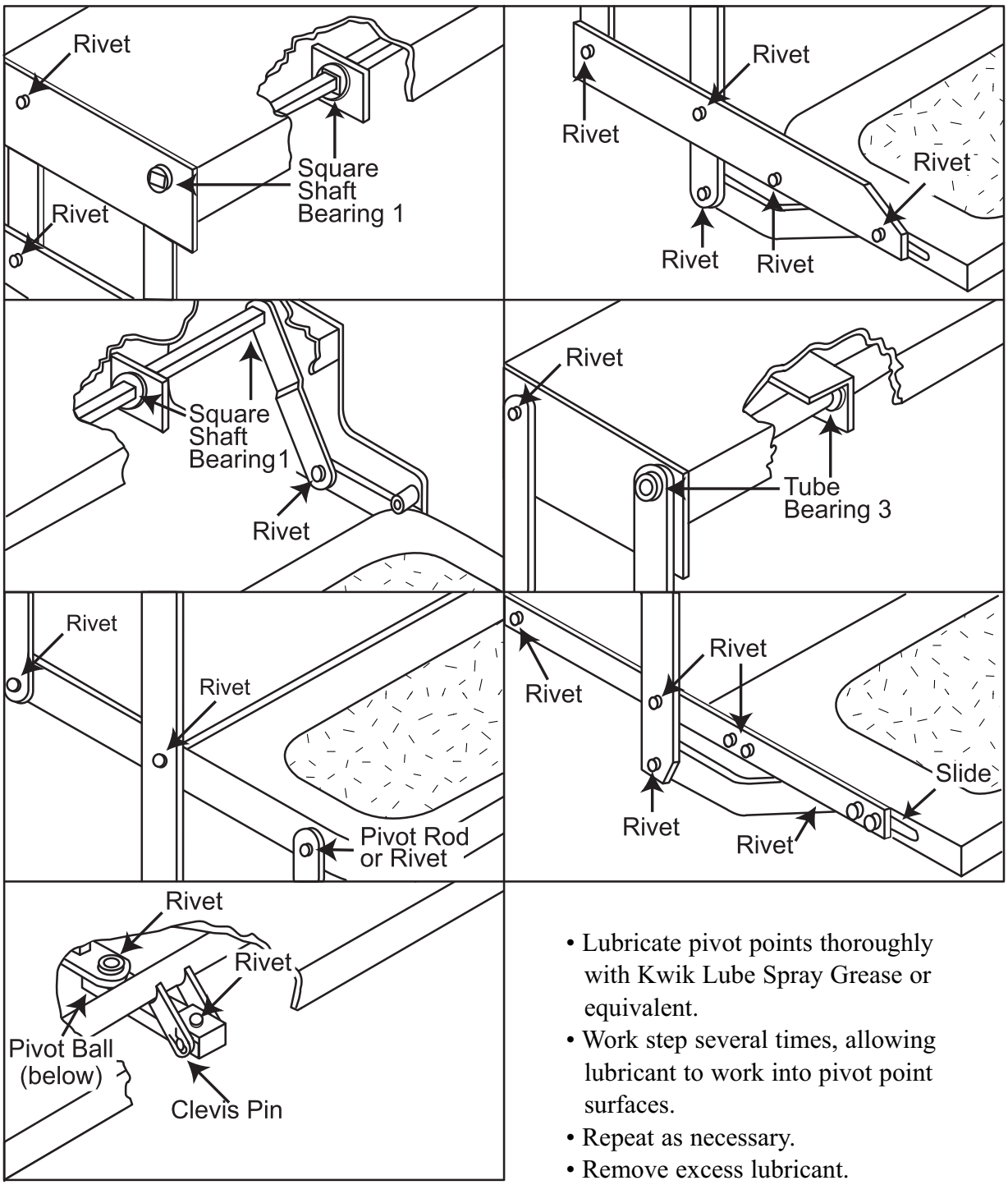


- Lubricate pivot points thoroughly with Kwik Lube Spray Grease or equivalent.
- Work step several times, allowing lubricant to work into pivot point surfaces.
- Repeat as necessary.
- Remove excess lubricant.

## *Stepwell*

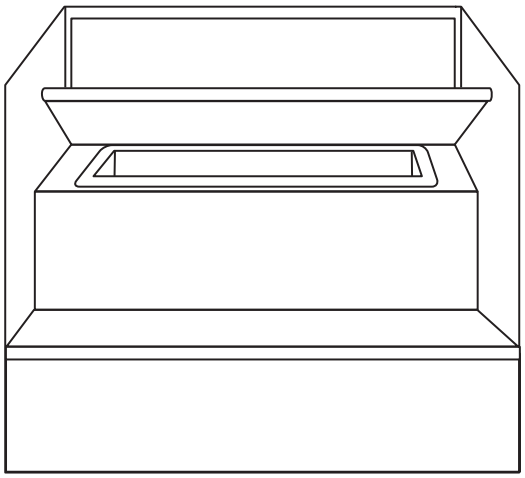


The stepwell incorporates two small lamps for lighting, a storage compartment with removable tray and a sliding stepwell cover. The uppermost step of the stepwell has the storage compartment w/removable tray. The storage can be utilized to store frequently used items such as, gloves (for refueling), tire pressure gauge, flashlight or outside slippers.

**Cover:**

The sliding stepwell cover uses an electrically operated air valve that controls an air cylinder to extend and retract the cover. The air valve will direct the air pressure to either side of the dual action air cylinder, moving the stepwell cover in or out. The stepwell cover will not operate without sufficient air pressure in the system (approximately 60 psi).

**CAUTION: The stepwell cover is under air pressure. When operating the stepwell cover, make sure there are no pets, shoes or other obstructions in the stepwell area. Do not operate the stepwell cover while standing in the stepwell area.**

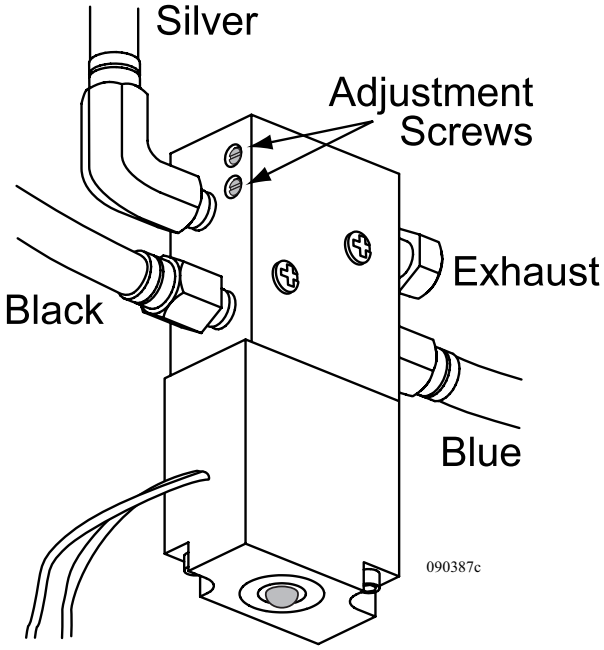


**Adjustments:**

The air solenoid is located in the front of the motorhome, behind the generator door mounted to the firewall. The easiest way to identify the location is have someone operate the stepwell cover with the generator door open and listen for the release of air.

The air solenoid has two adjustment screws. The adjustment screws regulate the air flow to either side of the air cylinder. Adjusting the screws will affect the speed in which the air cylinder moves in or out. Clockwise adjustment on the screw will decrease air flow. Counterclockwise adjustment on the screw will increase the air flow. For proper stepwell cover adjustment it is recommended that adjustments be performed by a qualified service person.

**WARNING: When adjusting the stepwell cover clear the stepwell area of obstructions, pets or persons. Do not adjust the stepwell cover while stepwell area is occupied.**

The air solenoid is located in the front of the motorhome, behind the generator door mounted to the frame. The easiest way to identify the location is have someone operate the stepwell cover with the generator door open and listen for the release of air.

The air solenoid has two adjustment screws. The adjustment screws regulate the air flow to either side of the air cylinder. Adjusting the screws will affect the speed in which the air cylinder moves in or out. Clockwise adjustment on the screw will decrease air flow. Counterclockwise adjustment on the screw will increase the air flow. For proper stepwell cover adjustment it is recommended that adjustments be performed by a qualified service person.

**WARNING: When adjusting the stepwell cover clear the stepwell area of obstructions, pets or persons. Do not adjust the stepwell cover while stepwell area is occupied.**



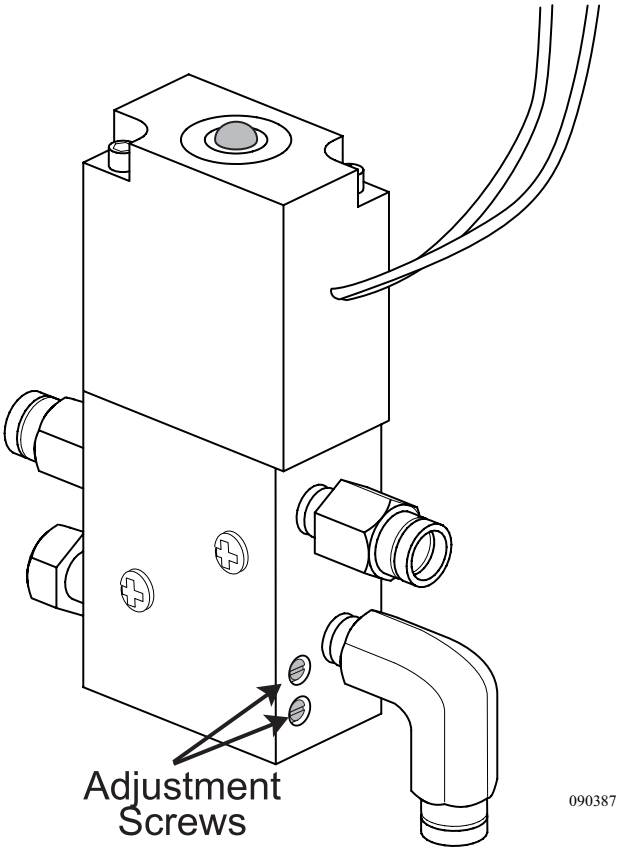

## ENTRY DOOR

The entry door is adjusted at the factory and tested for all operations. The door incorporates three separate seals to eliminate wind noise during travel. The door uses two separate locks for safety and security. One locking system is the door handle and the other is a dead bolt. The door handle incorporates a primary and secondary latching system. This is used to ensure secure and safe latching. There are adjustments which can be made to help maintain entry door performance.

### *Latch Adjustments*

**Adjusting the Entry Door Latch:**

- Determine which bolt needs adjustment.
- Slowly close the entry door observing the latch and strike bolt alignment. Do not attempt to latch if the alignment is off. If the alignment is correct, allow the latch to catch in the first (primary) position only.
- The latch should move to the second position with just slight pressure applied to the entry door. Upper and lower latches should be evenly timed. Press on the entry door to see if there is any further movement of the door.
- The entry handle should operate with little effort to open the entry door. An excessive amount of pressure indicates the bolts are set too far back.
- With a 5/8” inch box wrench or socket, loosen the movable strike bolt. Make all adjustments in small increments. Tighten the bolt firmly after making adjustments. The bolts should have slight up and down movement for vibration control in travel.
- Test the operation of the dead bolt lock to ensure proper functions.
- Silicone should be applied weekly to the entry door rubber gaskets to prevent squeaking while the motorhome is traveling. Use a one inch sponge paint brush, sprayed with silicone, for easy application.

**CAUTION: When operating the entry door ensure the dead bolt latch is fully in the unlock position prior to closing the entry door. Failure to do so can result in damage to the dead bolt and/or entry door.**

**Changing the Glass in the Screen Door:**

*Screen Door - Changing the Glass*

- The screen slider is *Lexan*, the slider can be bowed for removal and replacement.
- Replace with new *Lexan* and reverse the procedure.

**Adjusting the Screen Door For Up and Down Location:**

*Screen Door - Adjusting*

- Loosen the chrome bolts on the hinge side of the screen door. Four on the top and four on the bottom.
- There are slots in the steel hinge to allow up and down movement.
- There are four Allen type screws on the top hinge and four on the bottom hinge to adjust the screen door so it fits properly to the door. The hinge should fit tightly to the trim of the door, when the screen door is latched to the door and the door is open.
- Check to see that the pad on the inside of the door is not sitting on top of the aluminum trim of the door. If so, the pad it will hold the screen door away and prevent a proper seal. If the pad is too large, re-size the pad.

**Removable Screen:**

*Screen Door - Removing the Screen*

- The top half of the screen door is removable. This allows clear viewing through the entry door glass while traveling.
- To remove the top half of the screen door for travel, rotate clips and remove the screen.
- To store the screen for travel, use the clips provided on the bottom half of the screen door.

## Door Bell

The door bell button is located next to the entry door on the outside of the coach.

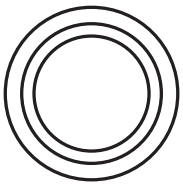

doorbell.eps

DBchime01.tiff

The chimes are located in the vanity cabinet just under the vanity sink. The LA131WH is a two tone chime, activated by a momentary switch, which completes the 12Volt DC circuit, activating electromagnets, momentarily pulling a plunger down against a measured resonant metal plate, and compressing a coil spring. When the electromagnet releases the plunger, the spring forces it up, against another resonant metal plate with a different tone.

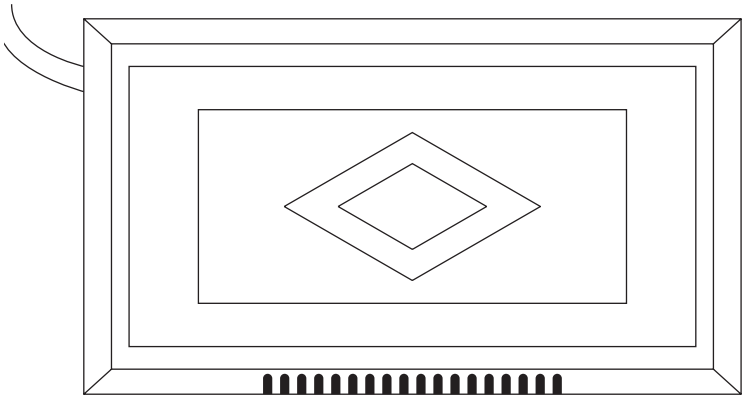

chime.eps

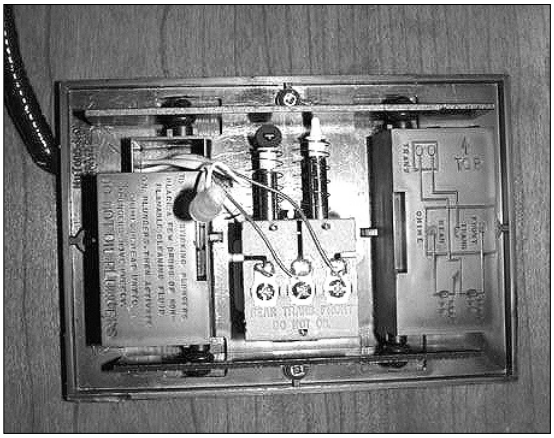


LA131Wh.tiff

If the chime fails to work, check the 20amp fuse in the bedroom closet 12 Volt DC run box. It should be #4. If the fuse immediately blows again, there could be a short in any of the five systems on that circuit. Consulting a technician is recommended. Those systems include:

- Hall Lights
- Bath ceiling light
- Vanity lights
- Door Bell
- Base Board Heater

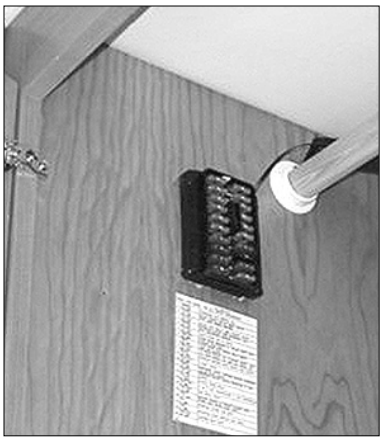

DB4.TIF

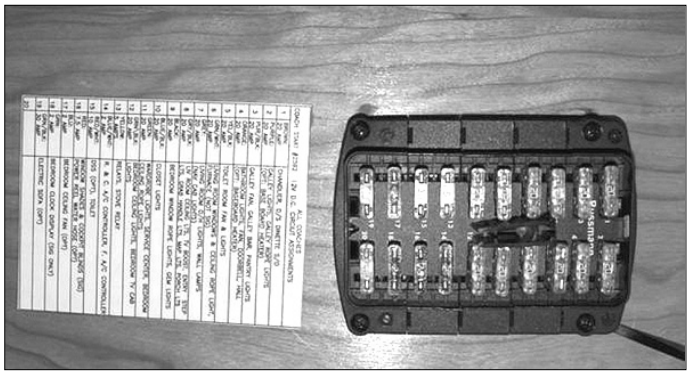

Fusepanel.tif

If chimes seem sluggish, the plungers can be cleaned with a nonflammable cleaning fluid and wiped dry.

**NOTE: Never oil chime plungers.**

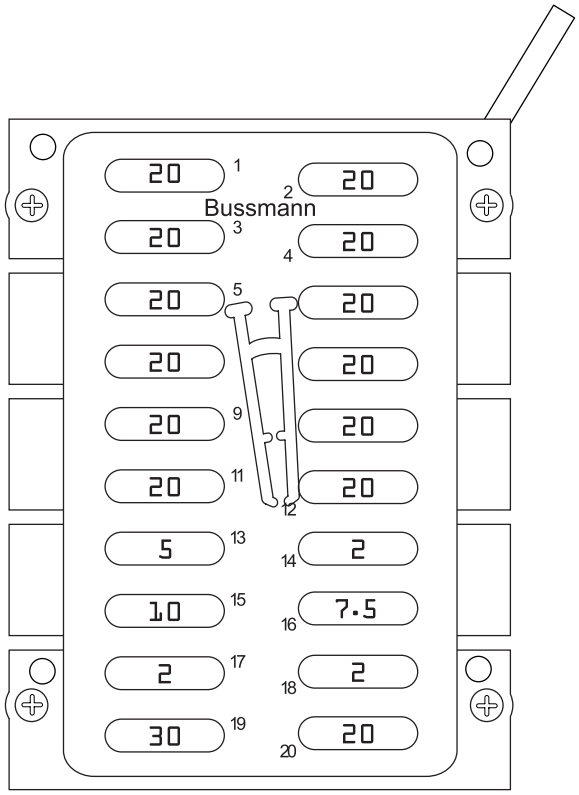


fuse box.eps

## KEYLESS ENTRY

The entry door and bay doors can be locked or unlocked using the touch keypad located adjacent to the entry door. Three lock codes are pre-assigned and not programmable. They cannot be assigned as unlock codes.

- **555 -** Locks entry door and bay doors if connected.
- **557 -** Locks entry door and bay doors if connected.
- **559 -** Locks entry door and bay doors if connected and arms keypad (flashes momentarily once every 15 seconds).

**NOTE: Due to preassigned codes, number(s) 5/6 cannot be used at the beginning of a new unlock code.**

Unlock codes are programmable and should be personalized upon receipt. Unlock codes are in two categories: **Master code** and **Optional codes**. Master code enables motorhome entry and auxiliary control. Deletion, adding or changing of optional codes are performed at the master code level. Optional codes only allow motorhome entry and auxiliary control.

**Consult the system owner's manual for further information.**

- To lock, shut the door, enter one of the three lock codes to lock the entry door and bay doors if bay doors are connected.
- To unlock, enter Factory Default master code or a three to eight digit personalized unlock code, if programmed.

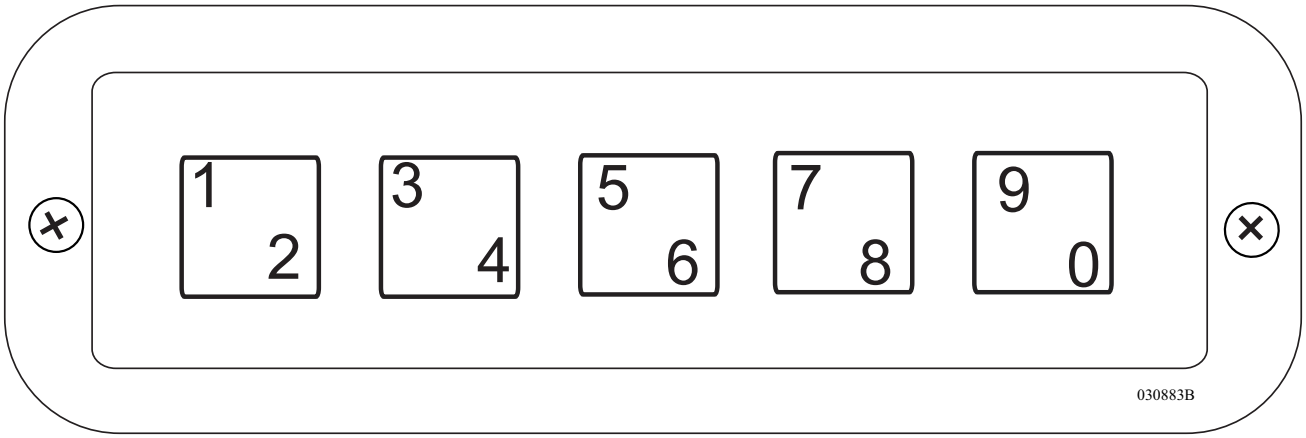

All motorhomes equipped with the keyless entry are shipped from the factory with default settings. It is recommended the unlock code be personalized for security purposes.

**To Program a Personal Number:**

1. Locate the programming switch, with the small black button with two 22-gauge wires connected: **Yellow** is **power** and **black** is **ground**. This switch is located in the curbside arm rest under the cup holder on certain models and behind the dash on others.
2. Press the programming switch until four (4) rapid beeps are audible.
3. Enter **1119** on the keypad; three (3) rapid beeps are audible. **1119** code opens the memory for accepting the master code.
4. Enter the new 3 to 8 digit master unlock code within five seconds.
5. Wait five seconds for two (2) rapid beeps.
6. Test the new Master Unlock code.
7. If the code was not accepted, repeat the procedure.



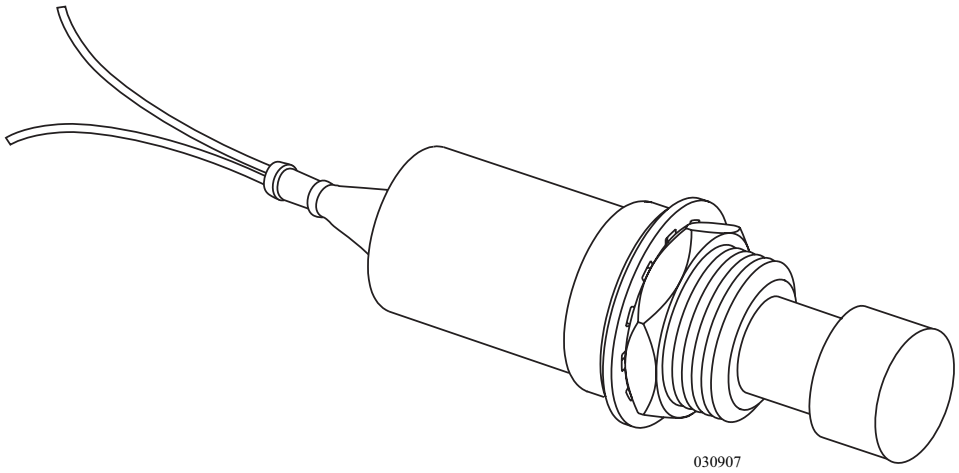

**WARNING: Ensure possession of entry door keys prior to testing new personal code.**

**NOTE: These instructions are for motorhomes equipped with "keyless entry" only.**

**NOTE: During any service work, it is recommended all key fobs be left with the motorhome for thorough testing and check procedure.**

If for some reason the remote does not respond and the Fob has a new battery, it may need to be authorized.

- Locate the keyless entry reciever box behind the instrument cluster.
- Turn the ignition switch to the on position.
- Locate the program button red in color.
- You need to have both key fobs with you within reach.
- Hold down the program button for five (5) seconds.
- While holding down the program button, using the key fobs press the lock buttons on the fobs, one at a time.
- Release the program button.
- Turn ignition switch off.
- Test remote key fob.

**NOTE: If the motorhome is factory equipped with an optional security system, the security system remote will lock or unlock the entry door and bay doors when the system is armed or disarmed. However, if the entry door is locked and armed with the security key fob, it must be unlocked with the security key fob to disarm the security system. Using the keypad to unlock will not disarm the security system.**

The keyless entry system can be used to unlock selected bay doors.
**To unlock the bay doors using the keyless entry system:**

- Enter the programmed **unlock** code. The entry door will unlock.
- Within five seconds of the first sequence of numbers entered, press the number **9**.

**Key Fob:**
The motorhome is equipped with a key fob to unlock and lock the entry door and the bay doors.

- Upper left button on the key fob is used to lock the entry door.
- Upper right button is used to unlock the entry door.
- Bottom left button is used to unlock and lock the bay doors.
- Bottom right button is not assigned.

**NOTE: The key fob operation distance is approximately within 50 Feet of the motorhome. If the doors locking mechanism is not audible, the marker lights will flash when the doors are unlocked or locked.**



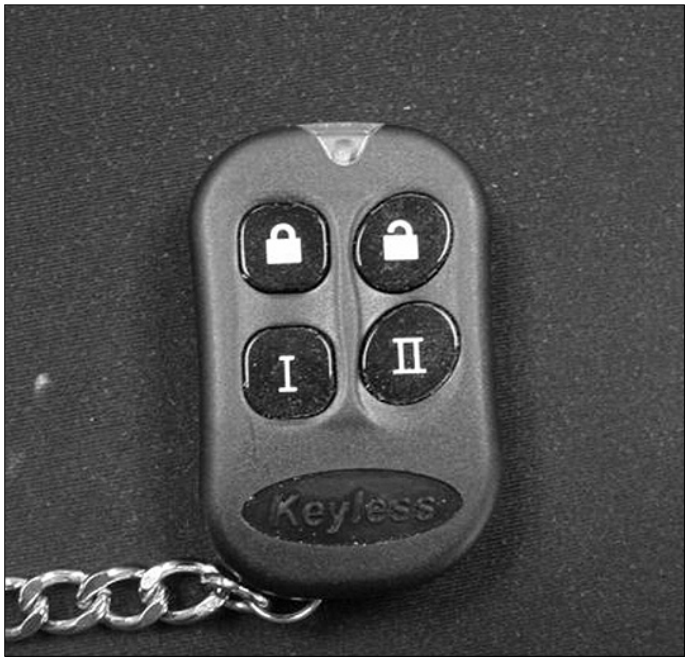


KeylessFob.tif

## SLIDE-OUT OPERATION

The main slide-out room operates by electric switches controlling hydraulic cylinders. Slide-out room operation uses many safety features preventing mechanical damage or physical harm. The slide-out room(s) will not operate until all safety requirements are met.

The design of the slide-out system requires very little maintenance. To ensure long life of the slide-out system, follow these simple guidelines:

- **Inspect** the roof of the slide-out for debris such as pine needles, dirt, leaves, sticks, etc. Any debris left on the top may cause damage to the seals when being retracted. If debris is present wash with soap and water, then rinse.
- When the room is out, visually **inspect** the wipe seal. The seal should be clean and free of dirt or other foreign material. **Inspect** the seal for tears.
- In the event the slide-out room leaks, fully retract it. If necessary, tape the exterior opening closed with duct tape until repairs to the motorhome can be completed.
- Open a window or vent to equalize pressure during slide-out operation.

**NOTE: Do not use any petroleum based products on the slide-out seal. Petroleum based products can damage the paint and will cause premature aging of the rubber seal.**

**WARNING: Move the driver's seat forward before activating the slide-out room. Damage to the upholstery can occur. The outside area must be clear of any obstructions restricting slide-out room operation. Ensure there is five or more feet of clear space outside the slide-out room prior to extending the room or damage to the slide-out, the motorhome or property can occur. When retracting the slide-out room, ensure there is sufficient clearance inside the motorhome. Never move the motorhome with any slide-out room extended.**

**CAUTION: Continuous operation of the slide-out room can drain the batteries and damage the motor by overheating.**

**To Extend the Slide-Out Room:**

- Move the driver seat forward.
- Confirm that there is enough clearance outside the motorhome for the slide-out room and awnings to extend.
- Ensure the ignition key is in the **OFF** position.
- The park brake must be applied.
- The storage bay doors under the slide-out must be closed.
- The house batteries are fully charged.
- Ensure all people, pets and objects are clear of the slide-out room path.
- The control switch for the slide-out room is at the overhead compartment on the curbside of the motorhome.

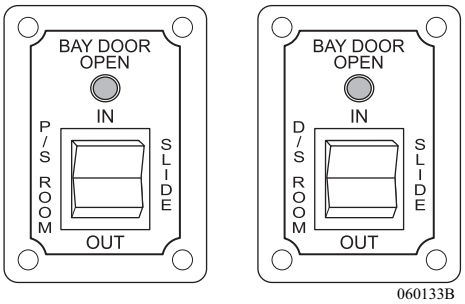


- Press and hold the slide-out room switch in the **OUT** position. The slide-out room will slowly move to the **OUT** position. Release the switch to stop room movement. To continue the room movement, push and hold the switch in.
- Release the slide-out switch when the room is fully extended (a change in motor sound indicates extension). The slide-out drive motor will not stop automatically; the switch must be released.
- If equipped, extend the bedroom slide-out.
- Level the motorhome with the leveling system.

**NOTE: Perform the slide-out room operation with the air suspension system full. Extensive damage could occur to the slide-out room and awning when extending the slide-out room in snow, sleet, ice or freezing rain. In such conditions, if the slide-out room is extended, clear the awning and ensure free movement prior to operating the slide-out room.**

**CAUTION: Dirt and grit trapped under the slide-out room could result in damage to the floor. Continuous operation of the slide-out could cause a drain on the house batteries and damage to the slide-out motor by overheating.**

**To Retract the Slide-Out Room:**

- Check for sufficient clearance inside the motorhome before retracting the slide-out room.
- Clean the floor to ensure there is no dirt or grit that could result in floor damage during operation.
- Move the driver seat forward.
- Inspect the exterior to ensure all bay doors are closed and there are no sags in the awning material.
- Remove any debris from the top of the slide-out room.
- Prior to retracting the slide-out room, start the motorhome. Allow the air bags to fully inflate to normal travel height.
- Retract the leveling system or prepare the air leveling system for travel prior to operating the slide-out.
- Turn the ignition switch OFF. The slide-out room will not operate with the engine running.
- The house batteries are fully charged.
- The park brake must be applied.
- Ensure all people, pets and objects are clear of the slide-out room path.
- Press and hold the switch in the IN position. The slide-out room will move slowly in. To stop the slide-out room, release the switch. To continue the room movement, push and hold the switch in. The motor will change tone when the slide-out room is fully retracted.
- Release the switch.

**NOTE: Be sure you have sufficient clearance on the inside of the motorhome (driver seat, etc.) before you retract the slide-out room. If the motorhome has ceramic tile floor ensure the floor is clean before you retract the slide-out room. Trapped dirt or grit under the slide-out room can scratch the floor surface. Never move the motorhome with the slide-out room extended.**

**CAUTION: Rain water can pool on the slide-out awning. The added weight will cause the awning to sag. Upon retracting the room, material can become caught in between the top of slide room and the opening in the motorhome. It will be necessary to retract the room in small increments allowing the water time to run off.**

**Manual Override Hydraulic - Emergency Procedures:**

If the slide-out room does not operate it is possible a safety feature may be engaged preventing room operation.

**Check these items if the slide-out room does not respond from the switch:**

- Is the Ignition key off?
- Is the Park brake applied?
- Are all bay doors under the slide-out room shut, bay door indicator lamp off at slide-out switch?

**If, after checking all safety requirements, the slide-out room does not respond and the hydraulic pump does not operate, check the following:**

- One of the bay doors below the slide-out may have faulty electrical connection at a safety switch (grounded) or one of the safety switches is out of adjustment.
- Ensure all electrical connections at the switch are good.
- All safety switches need to be in.

**Pump motor operates but the room does not move:**

- Check the two fuses adjacent to the hydraulic pump. If the fuses test good and the room does not operate, it is possible to manually retract a single galley slide. Dual galley slide-outs use different hydraulic components. Several people (as many as eight) are needed to push in the room.
- It may be necessary to contact a repair facility to have the problem diagnosed.

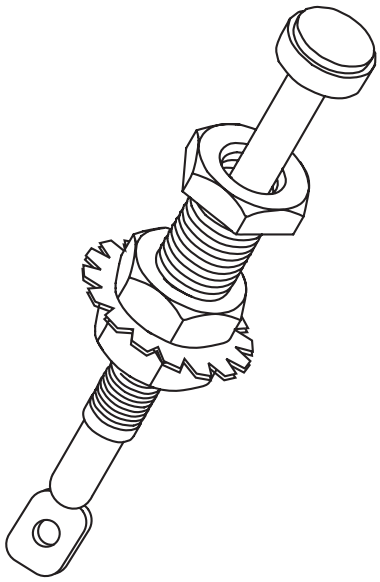

pinswitch.eps

**To Move Slide-out Room Manually:**

1. Retract the motorhome leveling jacks (see "Leveling Jacks").
2. Locate the slide-out room hydraulic pump on the lower curbside front frame of the chassis.
3. Use a ¼" Nut Driver to turn the release nuts on the solenoids counter-clockwise. Do Not exceed 4 ½ revolutions as damage to the solenoids may result. The room may move slightly as the valves are opened and internal pressure is released.
4. Line up equal distance along the outside wall. Do not push on the flange.
5. In synchronized movements, push the room in with repeated attempts.
6. Close the release nuts when the room is fully retracted.

**NOTE: The slide-out room is heavy and will require several people to push the room into position. When the slide-out room is in the fully retracted position, tighten the release nuts to hold the room in place. Do not over tighten.**

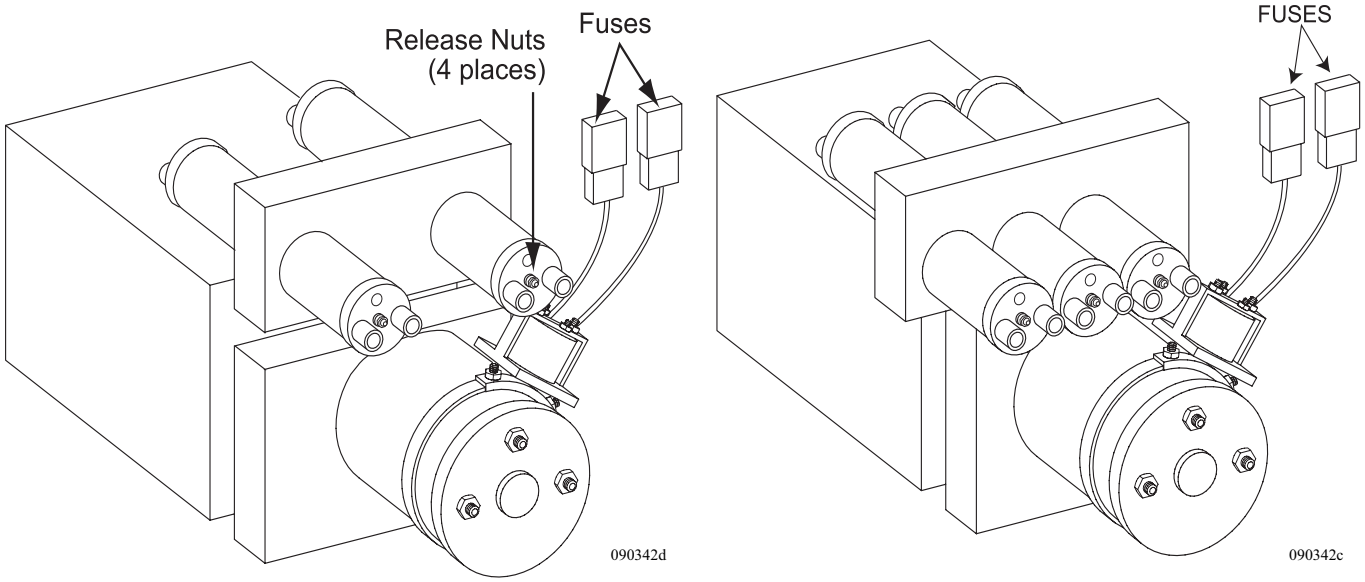

**Bedroom Slide-out-Extending:**

The bedroom slide-out operates electrically using many safety features to prevent mechanical damage or physical harm. Prior to moving the slide-out, firmly latch any cabinet doors located adjacent to the slide-out. Damage to the door or fascia can occur.

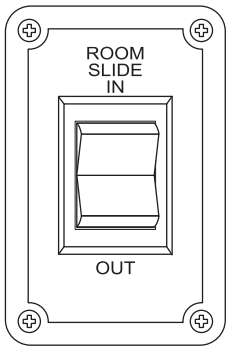

060211

**To Extend the Bedroom Slide-out:**

- Confirm that there is at least five feet of clearance outside the motorhome for the slide-out room to extend.
- Ensure the ignition key is in the OFF position.
- The house batteries are fully charged.
- The house battery cut-off switch must be on.
- Locate the control switch for the slide-out, usually on the vanity cabinet.
- Ensure all people, pets and objects are clear of the slide-out room path.
- Press and hold the slide-out room switch in the **OUT** position. The slide-out room will slowly move to the **OUT** position. Release the switch to stop room movement. To continue the room movement, push and hold the switch in.
- Release the slide-out switch when the room is fully extended (a change in motor sound indicates full extension). The slide-out drive motor will not stop automatically; the switch must be released.
- Level the motorhome with the leveling system.

**WARNING: Firmly latch all cabinet doors adjacent to the bedroom slide-out before extending or retracting the room. Damage to doors or fascia can occur.**

**CAUTION: Dirt and grit trapped under the slide could result in damage to the floor. Continuous operation of the slide-out could cause a drain on the house batteries and damage to the motor from overheating.**

**NOTE: Do not leave the slide-out in the extended position during severe weather. Conditions such as high winds or heavy rain may cause damage.**

**NOTE: Perform the slide-out room operation with the air suspension system full. Extensive damage could occur to the slide-out room and awning when extending the slide-out room in snow, sleet, ice or freezing rain conditions. In such conditions, if the slide-out room is extended, clear the awning and ensure free movement prior to operating the slide-out room.**

**To Retract the Bedroom Slide-out:**

- Check for sufficient clearance inside the motorhome before retracting the slide-out room.
- Clear the floor to ensure there are no objects that could result in floor or slide-out damage during retraction.
- Remove any debris from the top of the slide-out room.
- Prior to retracting the slide-out room, start the motorhome. Allow the air bags to fully inflate to normal travel height.
- Retract the leveling system or prepare the air leveling system for travel prior to operating the slide-out.
- Turn the ignition switch OFF. The slide-out room will not operate with the engine running.
- The house batteries are fully charged.
- The house battery cut-off switch must be on.
- Locate the control switch for the slide-out, usually on the vanity cabinet.
- Ensure all people, pets and objects are clear of the slide-out room path.
- Press and hold the switch in the IN position. The slide-out room will move slowly in. To stop the slide-out before reaching the IN position, release the switch. To continue the room movement, push and hold the switch in. The motor will change tone when the slide-out is fully retracted.
- Release the switch.

**CAUTION: Continuous operation of the slide-out can drain the battery and damage the slide-out motor by overheating. Never move the motorhome without having the slide-out retracted.**

## *Manual Override - Bedroom Slide-out*

If the slide-out room does not respond from the switch, check that all the safety features are in place.

- Ignition key is off.
- Interior house power is on.
- House batteries are fully charged.

If the slide-out room will not operate after verifying the safety features, it will be necessary to manually retract the slide-out.

**WARNING: Do not work on the slide-out system unless the battery is disconnected. Make sure the floor is clean before retracting the slide-out room.**

After the previous items have been checked and the room still does not move when the slide-out switch is pressed, follow these steps to manually override the slide-out room:

1. Lift the mattress to gain access to the slide-out motor inspection panel.
2. Remove the panel screws to access the motor and mechanism.
3. If the battery power to the slide-out motor needs disconnecting, mark the wire color and location.
4. Remove tie-strap securing brake lever in the Engage position. Move brake lever to Disengage.
5. Use a ¾" wrench or socket on drive shaft to retract the room.
6. After room is retracted, place brake lever to Engage.
7. Take the motorhome to an authorized dealer for service.



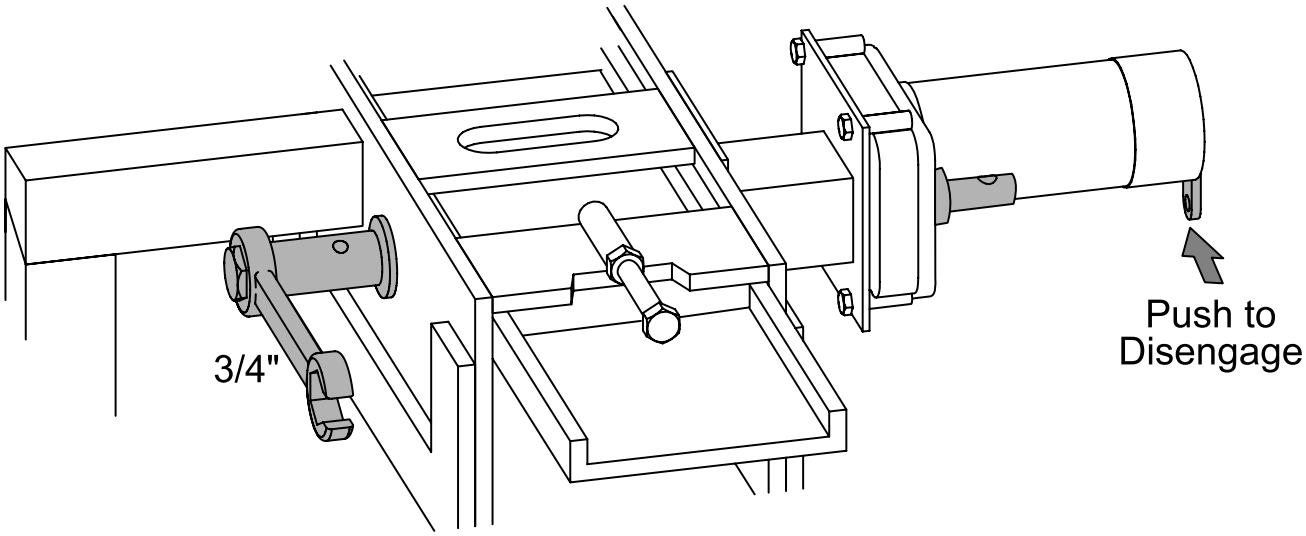


***Remove the wrench when not in use.***

020079e

## AWNINGS -
### *Front Door Awning*

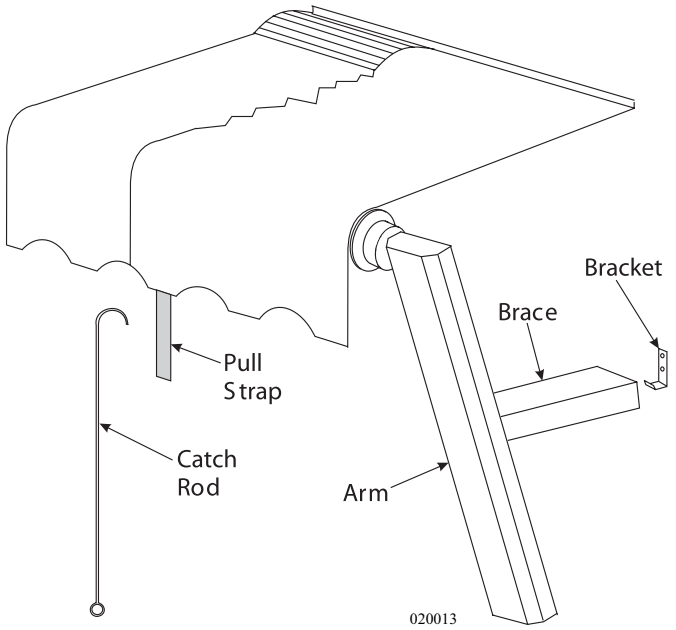


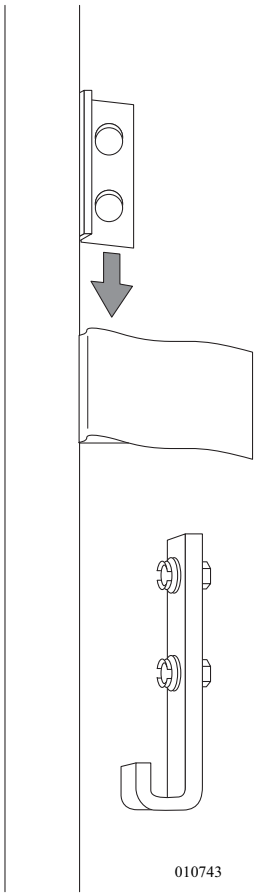


**To Extend the Awning:**

- Hook the pull strap loop with the awning pull rod.
- Pull the strap until the awning is at full extension. With the opposite hand, lever out the inner arms.
- Mate the slot of the inner arm with the hook on side of the motorhome. Repeat the same procedure for the other arm.
- Release the strap slowly, ensuring the inner arms are secure. Slide the strap to the rear of the awning roll tube and tie to the rear arm.

**To Retract Awning:**

- Untie the pull strap and slide strap to center of awning roll tube.
- Pull down on pull strap with a firm grip until tension is off the inner arms. Fold inner arms and attach them to the velcro.
- Carefully allow material to wind onto awning roll tube while holding strap in a neutral position. This will allow material to roll up evenly.
- Awning end caps should be against the rubber bumpers. If one end cap is off, pull down on awning pull strap while holding strap slightly to opposite side, allowing awning to roll back up into position.

**CAUTION: When the awning is at full extension do not allow the awning to snap back into the retracted position. Personal injury or damage to the awning or motorhome may occur.**

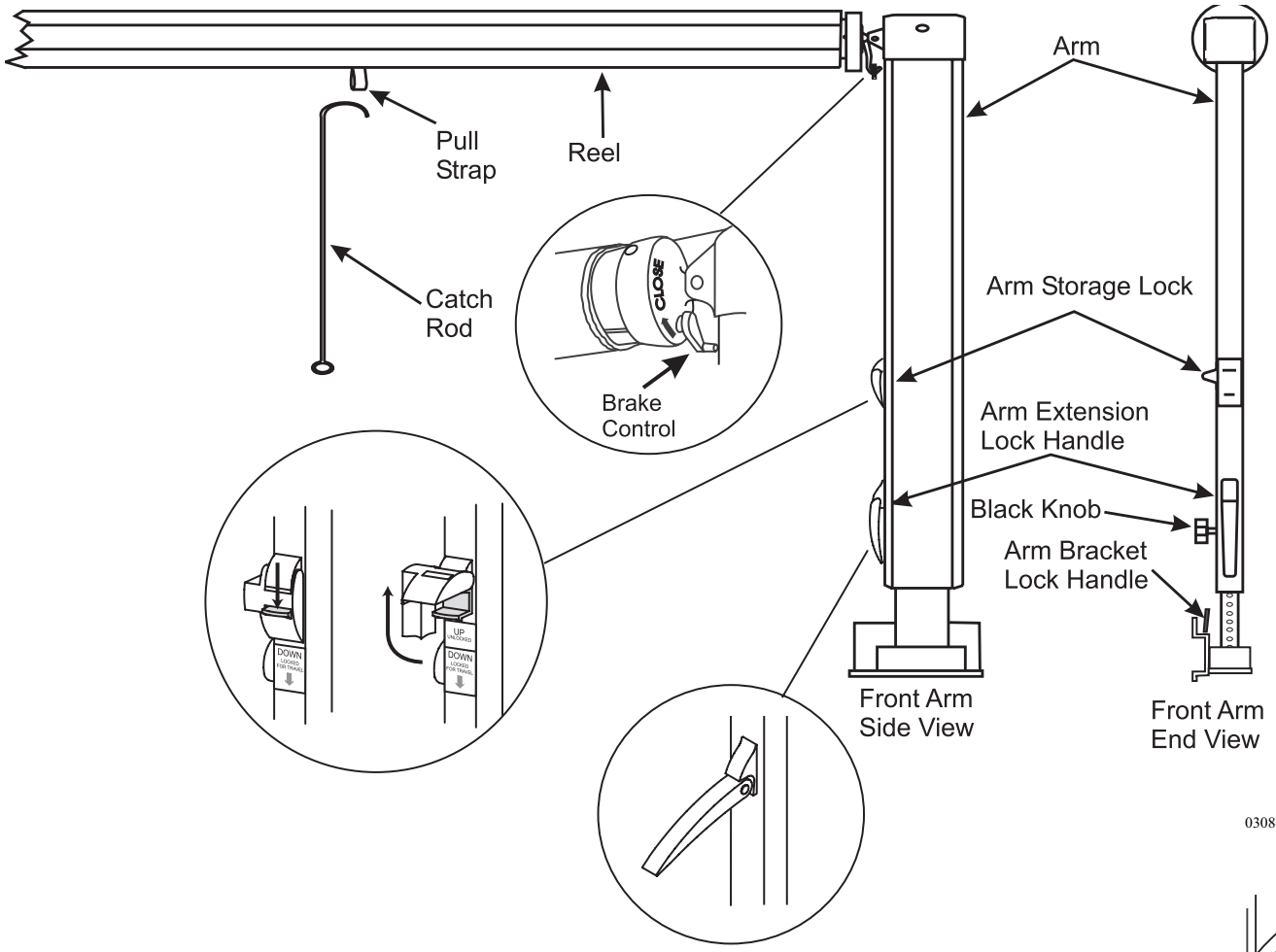


**To Unlock the Patio Awning:**

Start with either awning leg and repeat the following steps for each leg.

1. Loosen the black locking knob located on the backside of the awning leg (only about six turns are needed). This will allow the support brace to move freely.
2. Unlock the travel lock by using one hand to squeeze inner and outer arm to remove tension from storage lock. Push up on tab and swing lock away.
3. Move the brake control (front leg only) to the up/unlock position.

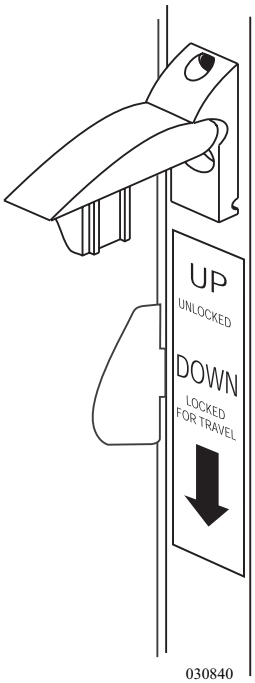


*Lower Brake Control*

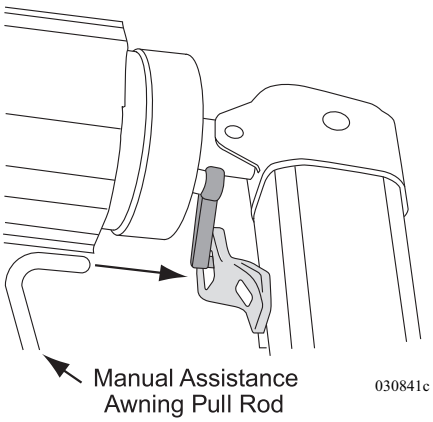


**To Extend the Patio Awning:**

1. Locate the awning pull rod.
2. Locate the loop of the pull strap and hook it with the awning pull rod. Draw the awning away from the motorhome to the desired extension.

**WARNING: Always use the pull strap for extending and retracting awning. Never retract awning while holding onto the awning arm. Hands or fingers caught between the awning arm channel and brace channel during awning retraction may result in serious injury.**

3. Slide the inner bracing rafters to the top of each arm ensuring the bracing is locked in place. Tighten the black locking knob.

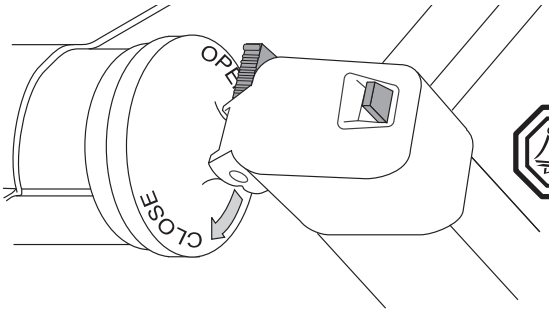


**NOTE: Ensure the locking tab on the support brace is latched through in the hole in the end cap.**

4. If equipped with Canopy Clamps, fasten the clamps at this time.
5. Using the arm extension lock handle, the awning can be hoisted upwards for additional clearance. Grasp upper arm with one hand and lift slightly upward. While lifting upward, push in on the release lever located on the lower portion of the upper arm. Lift front of awning to the desired height. Support the weight of the awning with one hand while relaxing release lever and allow the engaging pin to set into a hole in the lower arm. Go to the other awning arm and do the same. Ensure the awning is straight.
6. Slide the center pull strap to one end of the awning and store it by wrapping the strap around the awning leg.

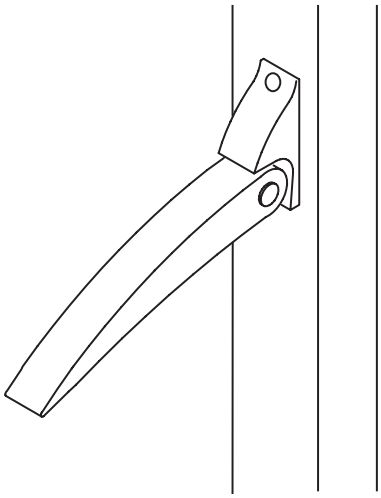

**Rain Release Setting:**

After the awning has been extended, choose the rain release position to prevent water build up on the awning. To position the awning in the rain release setting, lower one arm of the awning and leave the other arm in the normal position. This will create enough of a slope for adequate water run off.

**NOTE: Water weighs 8.33 pounds per gallon. The awning was not made to withstand the 500 to 700 pounds that could accumulate. It is best not to subject the awning and the motorhome to the needless strain.**

Rain Release Setting

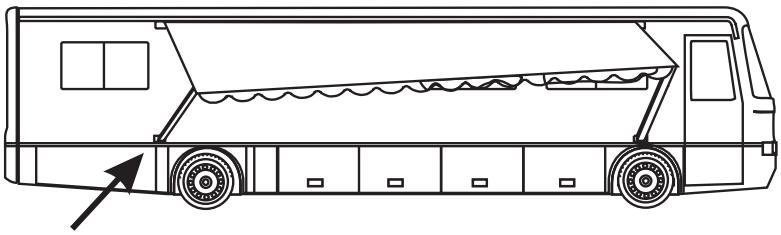

One arm should be set lower than the other for proper water run-off.

020031

**Using the Carport Feature:**

(Not available with Carefree One Touch Awnings.)

1. Unlock and extend the awning as described under "To Unlock the Patio Awning" and "To Extend the Patio Awning."
2. Unlatch the bottom of the rear arm by pushing in on the lock handle on the arm bracket. Swing the arm away from the motorhome to an upright position.
3. Drive the stakes through the bottom holes in the arm.
4. Raise the rear arm extension lock handle all the way up or to the desired height and lower the lock handle to lock the arms in place.
5. Repeat instructions 2 through 4 for the front arm.

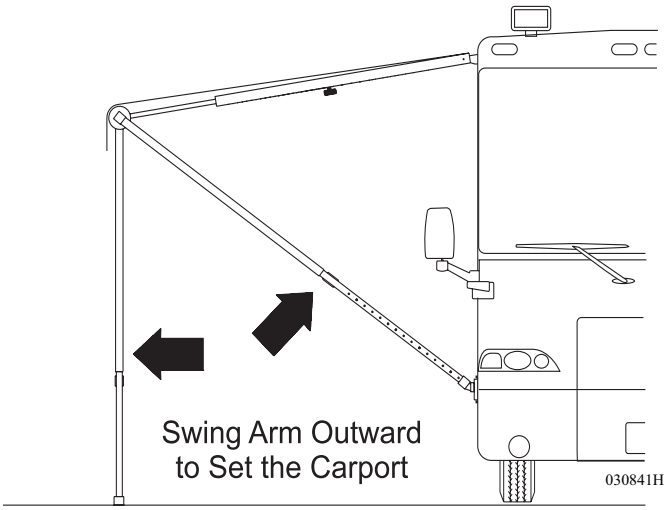


**NOTE: To move the awning out of the carport position reverse the above steps.**

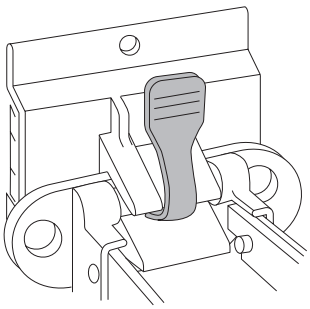

030841D

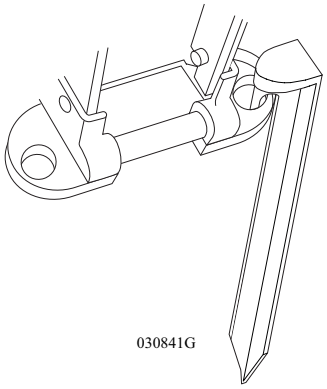

030841G

**To Retract the Patio Awning:**

1. Loosen the strap from the awning leg if it has been stored there.
2. Support the weight of the awning with one hand while opening the extension lock handle and lower the awning until the arms rest on the lower stop bolt. Loosen the two black locking knobs enough to allow the support brace to travel freely.
3. If equipped with Canopy Clamps, remove and store the clamps at this time.
4. Release the locking tab on the end cap of the awning leg and slide the inner support brace down the awning leg to the stop bolt. Repeat for opposite side.
5. While pulling down slightly on the pull strap, slide the brake control down located on the front awning leg.
6. Keeping downward pressure applied, slide the pull strap to the center of the awning while holding on to the strap.
7. Place the hook end of awning rod into pull strap loop to assist in retracting the awning. Make sure pull wand does not slip out of pull strap loop, allow the awning to roll up to the stored position.
8. Store the awning rod until it is needed again.
9. Verify that the brake control is in the locked or closed position. Snap the arm storage locks into the down position and tighten black locking knobs.

## *Girard Awning (Optional)*

The Girard Lateral Arm Awning incorporates the very latest in technology and design. The canvas and hardware store neatly in the box awning. The awning extends and retracts with the push of a switch providing obstruction free use and protection from the sun.

**Features:**

- Convenient switch operation and remote control for convenience.
- Retractable arms use twin cables for increased fabric tension and longer life.
- All aluminum hardware is powder coated to give long-lasting protection for both housing and mechanical parts.
- 100% acrylic fabric is weatherproof, permeable to air and resistant to mildew, rotting and fading.
- Motorized operation including a manual crank override for emergency retract.
- Wind sensor retracts the awning automatically during windy conditions.
- The electric motor is housed in the roller tube where it is protected from the elements and view.

**Extending the Awning:**

The awning operates from 120 Volts AC. Hook to shore power, start the generator or turn on the inverter. The ignition must be off for the awning to operate. The awning requires 10' of lateral side clearance.

- Momentarily push the switch once. The awning will extend full distance then stop automatically. Awning travel can be stopped anytime by pressing the switch once more. After stopping the awning, the awning will reverse direction when the switch is pressed once again.

**After Extending the Awning:**

After the awning has fully extended, no further setup or hardware installation is necessary. The 120 Volt AC power supply must remain on so the awning will automatically retract should excessive winds arise. The awning is equipped with a remote mounted anemometer (wind speed sensor) that detects wind speed. The sensor will automatically retract (requires 120 Volt AC) the awning should wind speed exceed a preset speed for more than a few seconds. If the wind speed sensor retracts the awning, leave the awning retracted to prevent possible awning damage until the wind subsides. The awning is designed to offer protection from the sun. Retract the awning in inclement weather conditions or when leaving the motorhome should inclement weather conditions arise.

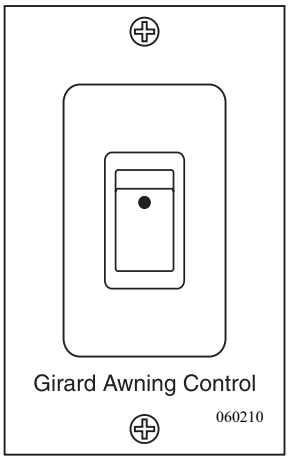


**CAUTION: It is strongly recommended the awning be extended full distance for maximum strength. Weather changes can suddenly occur. To prevent damage to the awning, retract the awning during gusting winds or inclement weather. Rainwater can quickly collect (pool) on the canvas and overload awning hardware resulting in damage.**

**NOTE: The awning motor is not designed for continuous use. In the event the motor is used to excess, it will automatically shut off and remain inoperative until the circuit breaker inside the motor cools down and automatically resets. Awning run time should not exceed four to five minutes per hour. If the breaker trips, it will automatically reset in 30 minutes to one hour depending on ambient temperature.**

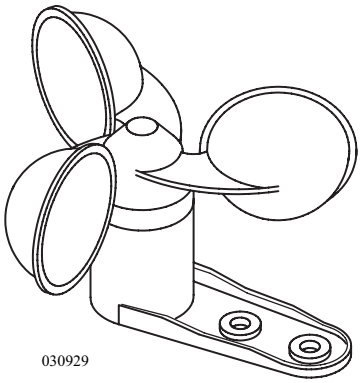


**Retracting the Awning:**

- Clear away any leaves, pine needles or other debris by lightly tapping the awning from underneath using a broom handle or other instrument that will not harm the fabric.
- Press the switch twice to retract the awning when at full extension. Awning travel can be stopped anytime by pressing the switch once more. After stopping the awning, the awning will reverse direction when the switch is pressed once again.

**NOTE: If the fabric was wet when the awning was retracted, extend the awning at the soonest opportunity to allow the fabric to thoroughly dry.**

**Emergency Procedure:**

**If the awning does not operate:**

- Check to make sure the 120 Volt AC is on by hooking to shore power, starting the generator or turning on the inverter.
- Check the circuit breaker in the 120 Volt AC breaker panel located in the bedroom.
- The circuit breaker inside the awning motor may have tripped. Wait 30 minutes to one hour then retry.

  If the awning still does not respond, the awning can be retracted manually. To manually operate the awning, use the telescoping crank handle supplied and follow the instructions in the original equipment manufacturers (OEM) manual.

**Wind Sensor Adjustment:**

To prevent damage, the awning uses a wind sensor that will retract the awning in case of high-sustained winds. In order for wind sensor to retract the awning, the motorhome must be hooked to shore power, have the generator running or the inverter turned on. When sustained wind speed reaches the set point, the awning will retract. The wind sensor will override any switch command. An adjustable potentiometer, located in the awning control box, is used to set the wind speed necessary to retract the awning.

The potentiometer, adjustable between 12 and 31 mph, is preset from the factory at 22 mph. The control box is located in the forward cabinet of the curbside living room overhead. The access panel must be removed to adjust the wind speed sensor.

**CAUTION: Setting the potentiometer above 25 mph may void the warranty.**

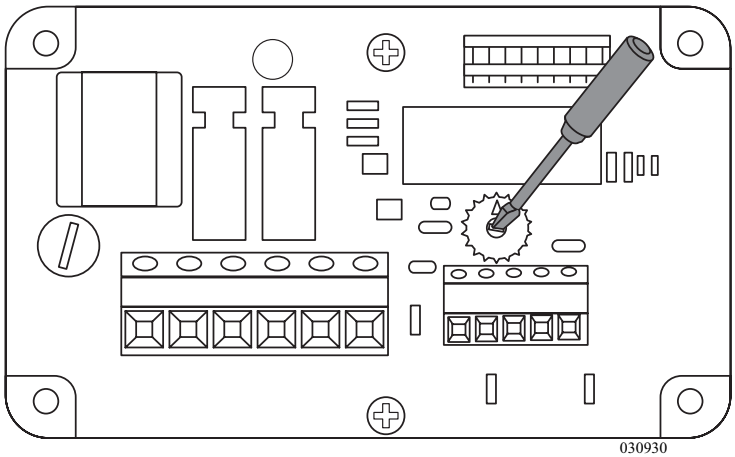


**To Adjust the Sensor:**

- Disconnect or turn off AC power. Turn off the interior house power (12 Volt DC).
- Unscrew the cover plate screws.
- Adjust the potentiometer clockwise to increase the amount of wind speed needed to retract the awning.
- Adjust the potentiometer counterclockwise to decrease the amount of wind speed needed to retract the awning.

When the wind sensor attains the set speed for more than a few seconds, the awning will automatically retract provided the awning has 120 Volt AC power. The awning will not automatically open when wind speed subsides, but must be opened using the switch. This feature is intended to prevent possible damage to the awning and related components.

**Girard Acrylic Awning Cleaning:**

The Girard acrylic awning fabric should be cleaned regularly before dirt, leaves and debris are allowed to accumulate, and become embedded in the fabric. The fabric can be cleaned without being removed from the awning. Carefully brush off any loose debris and hose down the awning. Clean the fabric using a cloth and mild soap such as FeronCLEAN. A high-quality acrylic fabric cleaner may also be used to help maintain the appearance. Carefully, follow the instructions listed on the container. Do not use detergents. Metal surfaces should be cleaned with soapy water and thoroughly rinsed. Allow the awning to thoroughly air dry while extended. Wash and dry preferably on a warm sunny day.



**Facts and Care Tips:**

- The awning is at the strongest setting when fully extended. Avoid leaving the awning extended in inclement weather. Retract the awning during rainy conditions. Water weighs 8.33 lbs. per gallon and can quickly collect on the canvas. Excess water collection can overstress and damage awning hardware.
- Remove leaves, pine needles or other debris by tapping the canvas from underneath using a broom handle or other instrument that will not harm the fabric.
- If the wind sensor retracts the awning, it is recommend the awning remain retracted until the winds subside.
- The ignition key must be in the OFF position for the awning to operate.
- The motor draws approximately 300 watts (about three amps) of power while in use.
- Allow the awning fabric to thoroughly dry before retracting the awning. Should the awning need to be retracted while the fabric is wet, it should be extended as soon as possible to allow it to finish drying.

***Tips***

- Avoid leaving the awning partially extended during rainy conditions. The awning is at the strongest setting when the awning is fully extended.
- If the wind sensor retracts the awning, it is recommend to leave the awning in until the winds subside.
- Awning with not operate with the ignition key in the ON position.

## *Carefree Automatic Awning (Optional)*

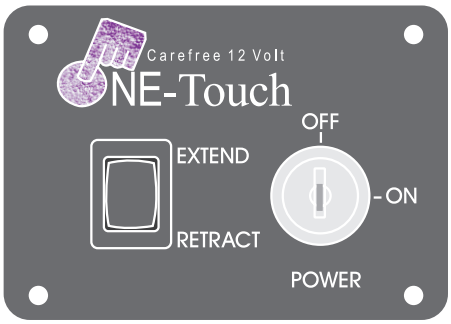


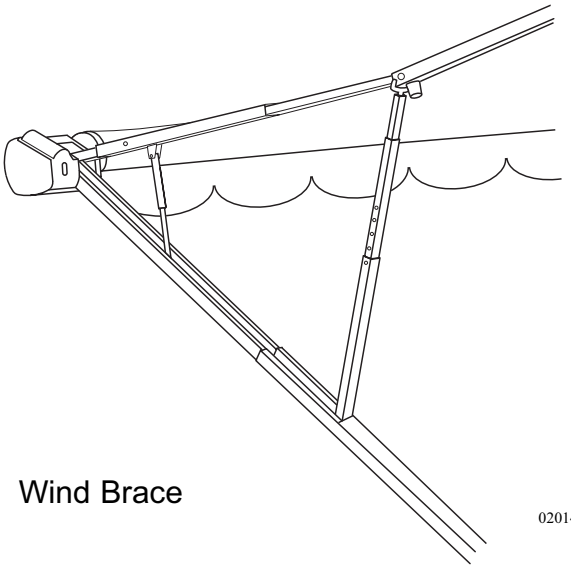


The Carefree One Touch automatic awning requires only “finger tip” operation. A key lock on the One Touch switch pad is provided to prevent accidental deployment of the awning while the motorhome is in motion. The key is removable in the lock or unlock position. Gas filled struts keep the awning fabric tight at any extended position. The 12 Volt DC motor for the One Touch awning uses approximately 15 Amps while in operation.

**To Extend the Awning:**

- Verify all persons and objects are clear from the extend path of the awning and related hardware.
- Turn the **One Touch key** to the **ON** position.
- Depress and hold the momentary switch to **EXTEND**. Motor will automatically stop at full extension.
- Allow 14 seconds for awning to reach full extension.
- Extension distance or fabric tension is adjusted by toggling between **RETRACT** and **EXTEND**.
- Turn the **One Touch key** to the **OFF** position.
- Install the wind braces (2) between the upper rafter and the main arm. Adjust wind brace so the inner spring is under tension.

**CAUTION: The patio awning requires nine feet of lateral clearance from the side of the motorhome. This distance will allow the awning to reach full extension. The One Touch patio awning was not designed with a carport feature or a rain release setting. The awning should be retracted if the motorhome is left unattended or high wind conditions exist. Otherwise, wind damage to the awning may occur.**

**NOTE: It is not required to have the awning at full extension. Awning may be stopped at any time of extension or retraction by releasing the momentary switch.**

**To Retract the Awning:**

- Remove the wind braces.
- Verify all persons and objects are clear from the retract path of the awning and related hardware.
- Turn the One Touch key to the **ON** position.
- Press and hold the momentary switch to **RETRACT**. The motor will automatically stop at full retraction.
- It takes approximately 14 seconds for the awning to travel from the fully extended position to the fully retracted position.
- Turn the One Touch key to the **OFF** position to avoid accidental deployment of the awning while the vehicle is in motion.

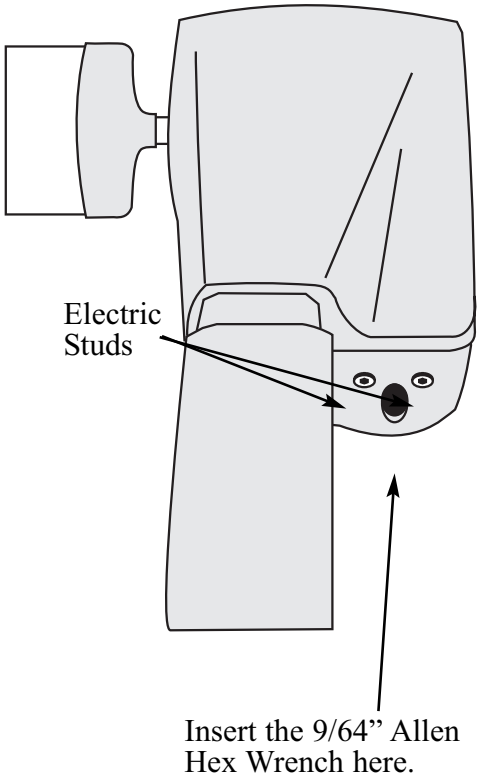

*12 Volt Motor.*

**Tips - If the awning fails to retract or extend:**

- Verify the One Touch key is in the **ON** position.
- The house battery cut off switch is in the **ON** position.
- The house battery voltage is at 12 Volts or above.
- Verify proper electrical connection from the awning motor to the side of the motorhome.

**Emergency Retract Procedure:**

If the One Touch awning fails to retract and proper DC voltages have been verified, the One Touch awning has two emergency methods of alternately retracting the awning.

1. Two exposed electrical studs are mounted externally at the forward end of the awning at the motor assembly. An alternate 12 Volt DC positive and negative supply may be applied to these connections. If awning fails to move, reverse the polarity of the alternate supply leads.

2. On the motor assembly, mounted externally at the forward end of the awning, is an opening. Insert a 9/64" Allen hex wrench. Using an electric drill, wind the awning to the retract position.

**CAUTION: When using an alternate method to operate the awning, use extreme care to keep appendages, hair or loose clothing away from exposed rotating hardware.**

## Slide-Out Awning

The slide-out awning will automatically roll out as the slide-out room extends. After the slide-out room is extended, the awning can be completely rolled out as a window awning.

The slide-out awning has two devices to help prevent the awning from "billowing" while traveling. The first device is a pair of anti-billow studs, which are located above each end of the awning roller tube. If the awning catches wind and begins to billow, the metal wrap of the awning will contact the anti-billow stud. Levering downward, the stud engages with a plastic gear preventing further unraveling of the awning material.

The second device uses two metal wind deflectors which are positioned just below the awning. This helps prevent side winds from unwinding the awning.

**CAUTION: The slide room and slide-out awning should be retracted during heavy wind, rain or snow as damage can occur to the awning or motorhome. Wind can drive rain under the slide-out awning and into the motorhome.**

**NOTE: At least five feet of clearance is needed between the side of the motorhome and any objects, such as trees or fences, to allow the slide room and slid-out awning to be fully extended.**

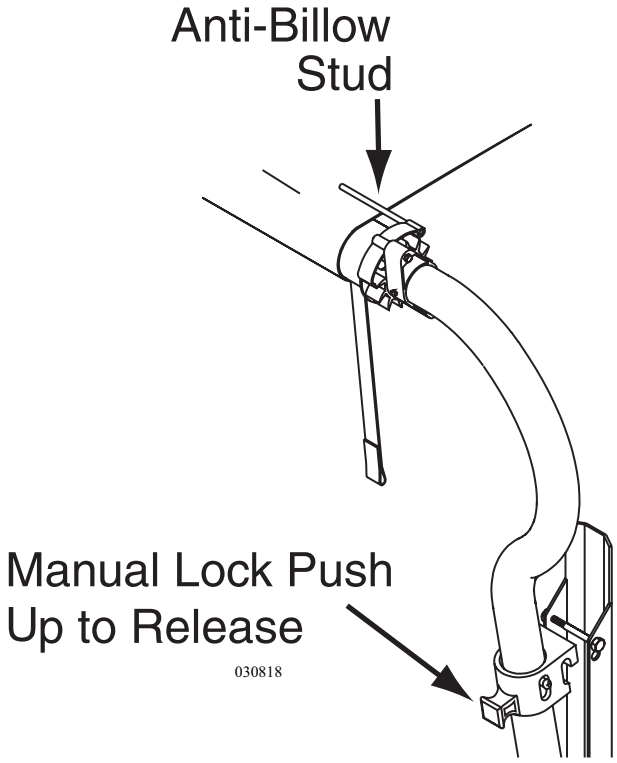


**To Extend the Window Awning:**

1. Follow the instructions for extending the slide room.
2. Using the awning pull rod, unlock the travel latches located on the awning side arms.
3. Located between the two metal wind deflectors is the awning pull strap. Use the awning pull rod to hook the loop in the pull strap.
4. With a firm grip on the rod, pull down on the strap to extend the awning over the window.
5. Secure the side straps on each end of the awning to the hooks provided on the motorhome.

**To Retract the Window Awning:**

1. Engage the end of the pull rod into loop on center pull strap.
2. Pull on rod to relieve pressure on the side straps and remove straps from the hooks.
3. Carefully allow the spring tension to wind the awning up. Do not allow the awning to snap back into position as this may damage the awning or the motorhome. Awning material should roll up evenly.
4. Lock the travel latches with the awning pull rod.
5. The slide-out awning retracts automatically and rolls up to the travel position when the slide-out room is retracted.

**CAUTION: Rain water can pool on the slide-out awning. The added weight will cause the awning to sag. Upon retracting the room, material can become caught in between the top of slide room and the opening in the motorhome. It will be necessary to retract the room in small increments allowing the water time to run off.**



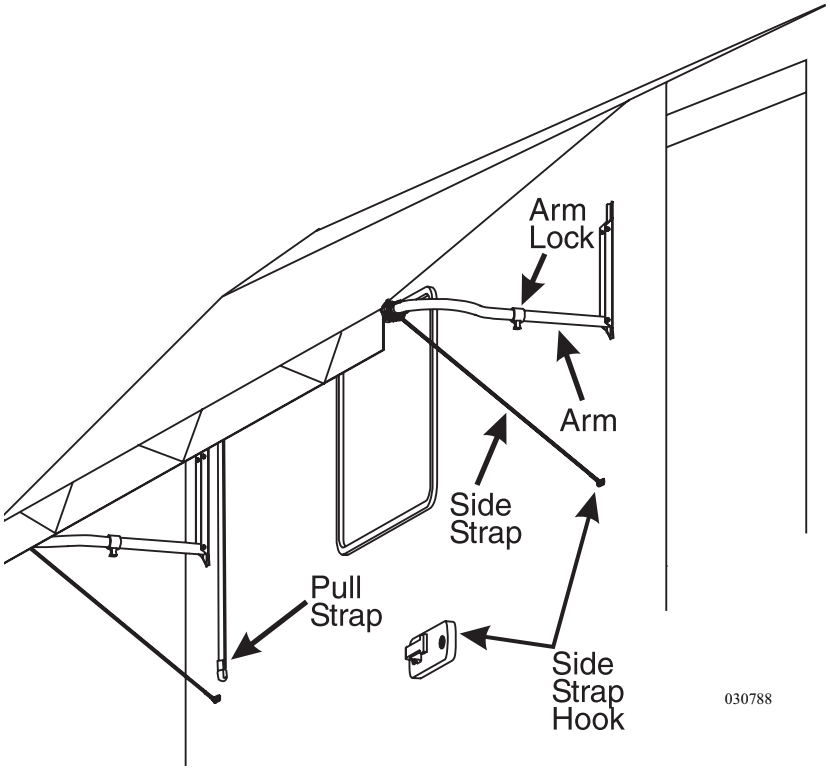

## *Window Awning - Girard*

The Girard window awning uses 120 Volt AC to operate.

**To Extend or Retract the Awning:**

- Hook to shore power, start the generator or turn on the inverter.
- Turn on the switch to extend or retract the awning. Awning will extend or retract full distance and stop automatically when the awning has fully extended or retracted. Awning may be set to any position by placing switch in the center position.

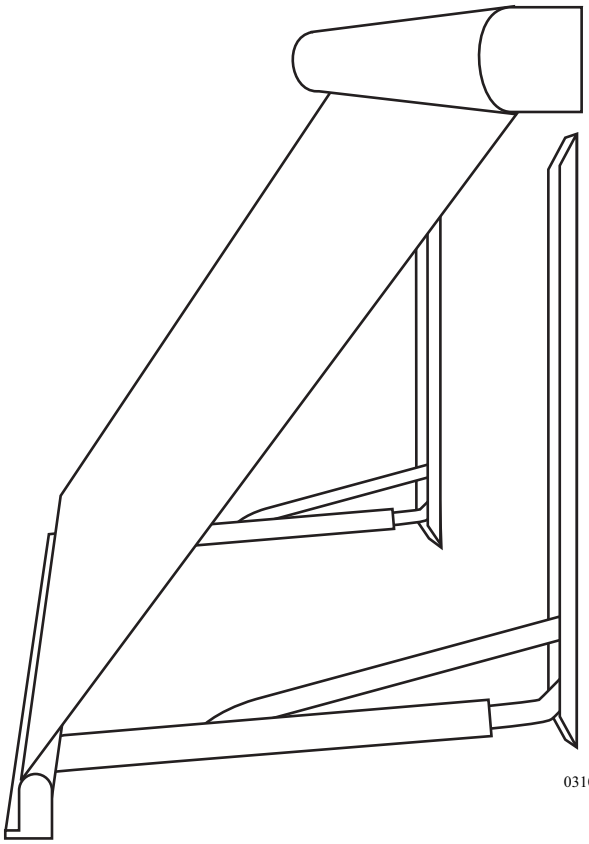

031034

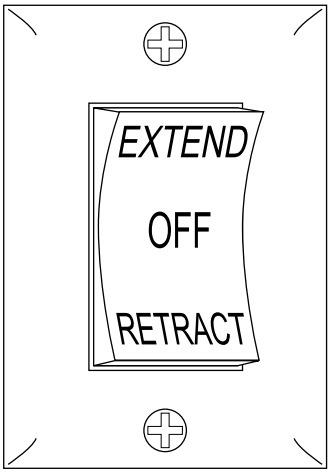


031035

## Slide-out Cover

The slide-out cover is automatic. When the slide-out moves in or out, the cover reacts to the slide-out direction. A fixed edge of the slide-out cover is installed into an awning rail, mounted just above the slide-out. A spring-loaded roller with special brackets mounts to the slide-out. In a hard rain, the cover helps prevent water from penetrating the seal of the slide-out.

The slide-out cover will extend automatically attaining full coverage when the slide-out achieves maximum extension.

**NOTE: Water may pool on top of the extended cover. As the slide-out is retracted, the water is removed when the cover retracts.**

The slide-out cover retracts automatically and rolls up to the travel position when the slide-out is completely closed.

**NOTE: When retracting the slide-out, stop the room approximately halfway. Confirm that the fabric is rolling properly before fully retracting the slide-out.**



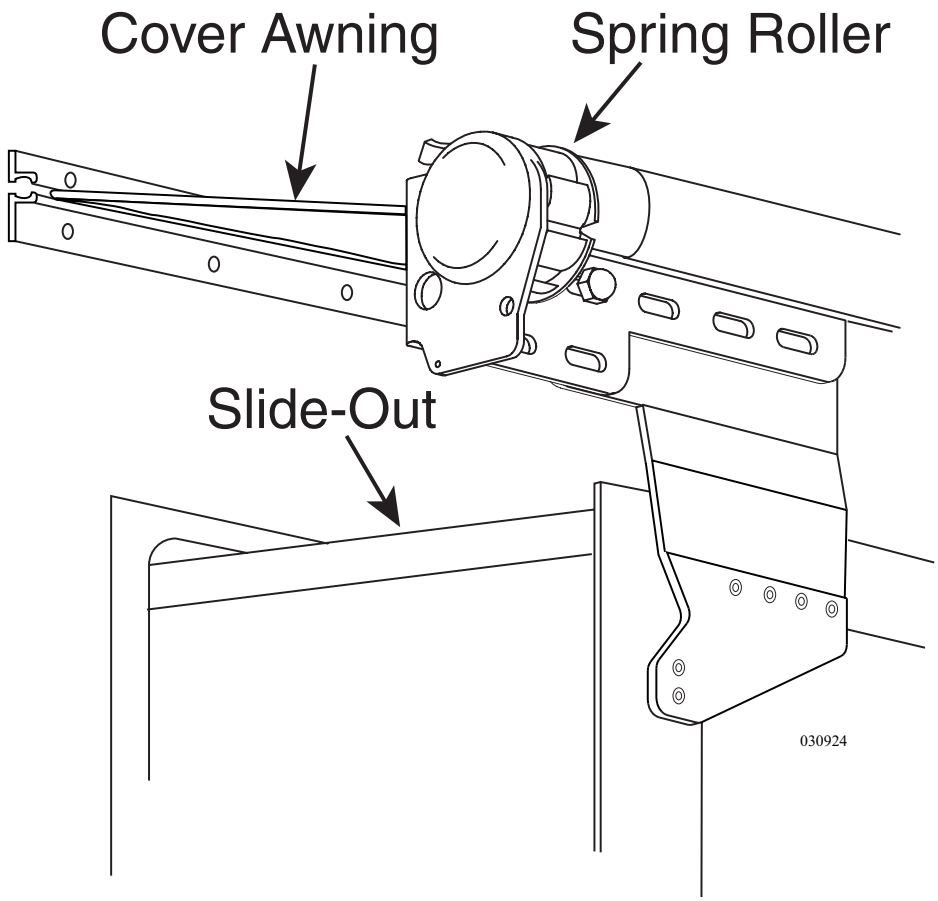

## FANS

### *Exhaust Fan*

A wall thermostat controls the galley exhaust fan using House 12 Volt DC to operate.

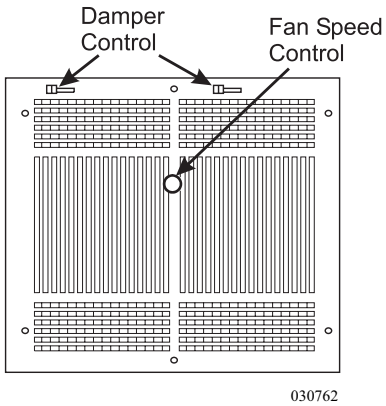


**To Operate the Fan**:

- Remove the ceiling grill cover.
- Open the grill dampers.
- Select one of three fan speeds using the round knob on the grill.
- Set the thermostat to **ON** for continuous airflow or set the thermostat to **AUTO** and set the desired air temperature for thermostatically controlled airflow.
- To turn the fan off set the thermostat to **OFF**. Close the grill dampers and install the ceiling grill cover.

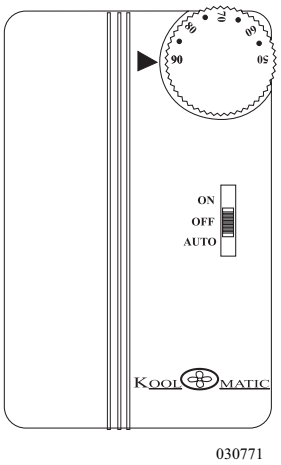


**NOTE: Close the grill dampers before installing the grill cover. Failure to close the damper will result in the cover blowing off while the motorhome is moving.**

### *Bathroom Fan*

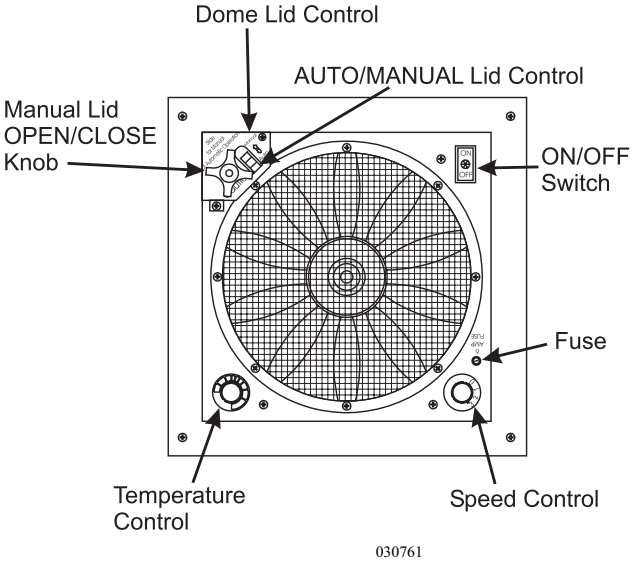


The bathroom fan has three speeds with a **0** or **OFF** position. A built in thermostat has an operating range of 22º F to 123º F. This is based on inside ambient air temperature. The dark **blue zone** on the thermostat is **cool** while the **dark red zone** indicates **heat**. The fan lid operates electrically during normal operations. When the lid opens approximately two inches, the fan motor will operate. The fan can be operated manually. Place the thumb switch to the **MANUAL** position. Rotate the crank handle to close the lid. Return the thumb switch back to the **AUTO** position immediately after using the **MANUAL** position.

**To Operate the Fan:**

- Set fan switch to **ON**.
- Select the desired fan speed.

**NOTE: If the speed switch is in the "0" position the fan cover will not operate automatically.**

**Tips for Fan Operation:**

- To keep condensation from accumulating operate the fans when cooking. Condensation occurs naturally from fluctuations in interior and exterior temperatures, humidity and dew point changes, steam from cooking or boiling large amounts of water on the cook top. Shower use is another source of condensation.
- If the fan fails to operate, check for a blown fuse either in the domestic fuse panel or the 6 Amp fuse on the fan.
- To clean, remove the eight screws holding the screen. Use a non-abrasive soap and water to clean. Install the screen after cleaning.
- Slightly opened windows on the shaded side of the motorhome create the most airflow, especially on hot sunny days. Direct airflow by slightly opening selected windows. The maximum airflow is between the open window and the Fantastic Vent.

**NOTE: Do not leave the fan switch in the active mode while the motorhome is stored or unattended for extended periods. High winds other unusual conditions or obstructions may prevent closing. The resulting leakage could cause serious damage.**



## PRIVACY - DRAPERY ELECTRIC (Optional)

- The receptacle is powered by shore power, the generator or the inverter.
- Press and hold the rocker switch to open or close the drapes. Release the switch to stop movement.
- Release the switch when the drapes are at the end of travel.

**Internal Thermoswitch Shut-Off:**

The drapery motor is designed for normal use. If run excessively, such as every few minutes, the internal thermoswitch shuts off the motor for several minutes. The thermoswitch prolongs the motor life and prevents inadvertent or accidental abuse of the mechanism.

**NOTE: If the cord stretches after use, adjust the tension by moving the motor on the wall bracket.**

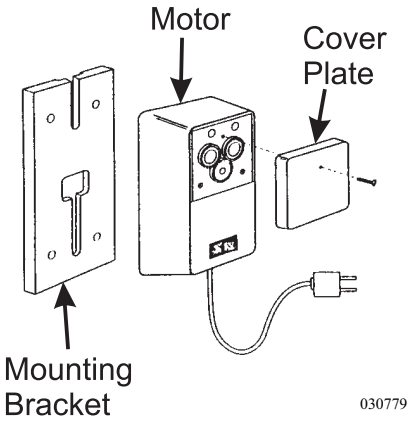


**Replacing the Driver Tire:**

- Turn off all power and unplug the receptacle.
- Remove the screws holding the cover.
- Roll the tire manually and divert the drapery cord out of the mechanism.
- Cut the old tire off using care not to cut the plastic drive roller.
- Wipe the roller with a dry cloth to remove any dirt or residue. Snap the new drive tire in place.
- It may be necessary to adjust the motor on the wall bracket to get the drapery cord back into position.

## DOOR - SLIDING

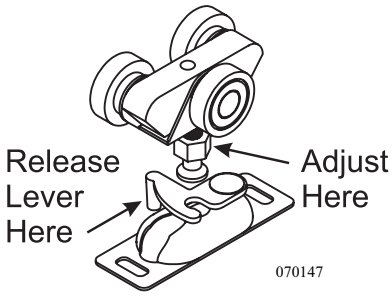


The sliding pocket door uses two rollers at the top of each door. During the life of the motorhome the sliding door may need adjusting. The sliding pocket door can be adjusted to close tight against the wall. Locate the small wrench and turn the adjusting screw upward or downward.

If, for any reason, the pocket door needs to be removed, locate the portion that is secured to the top of the pocket door and rotate the small lever outward to release the latches.

**The pocket door rollers should be lubed with just a small drop of oil once a year to help increase the life of the rollers and improve the sliding of the door.**

## SEAT CONTROLS

The Pilot and Co-Pilot seats are adjustable to provide maximum comfort. Seats must be locked in the forward facing direction while traveling.

**NOTE: The seats operate from 12 Volt DC house power. The ignition must be on to operate the lumbar/seat support and heater functions.**

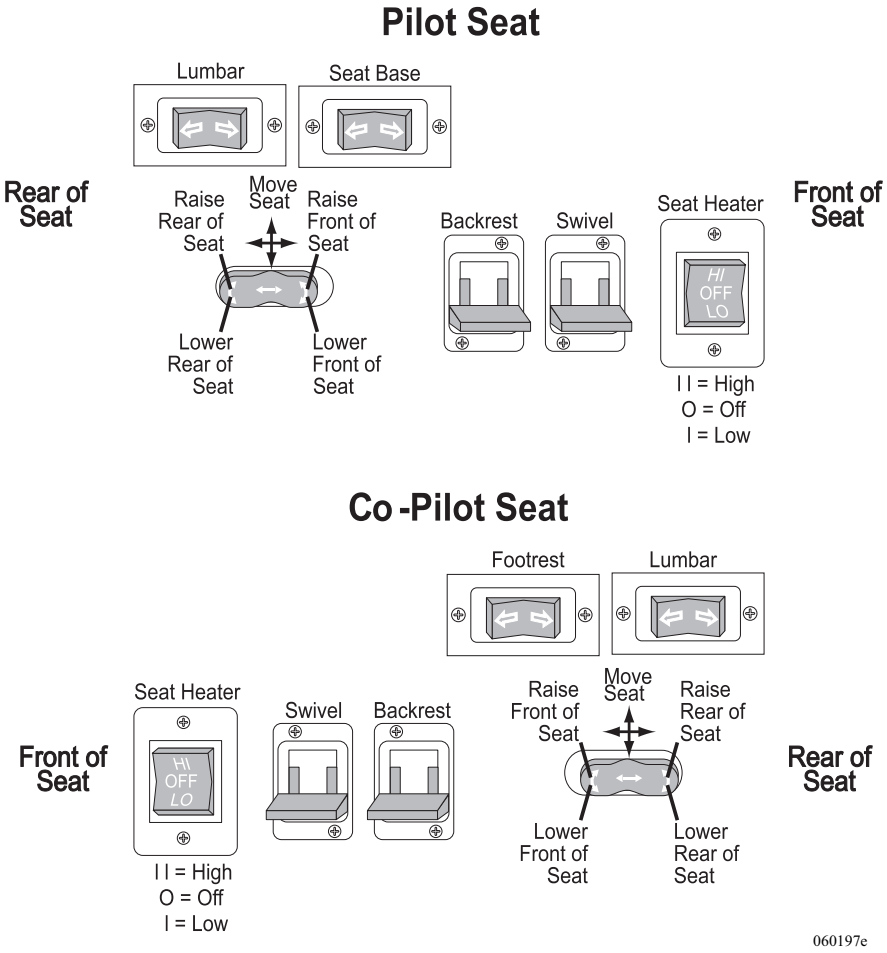

- When swiveling the seats, lift up the swivel lever and rotate the seat around to the desired position.
- The passenger seat swivels all the way around, when the slide-out is extended.
- When rotating the driver seat, put the steering wheel in the upright position.
- Move the seat forward, then pull the swivel lever up and rotate the seat around to the desired position.

**WARNING: Seats must be locked in the forward facing position when in transit.**

***Seat Swivel***

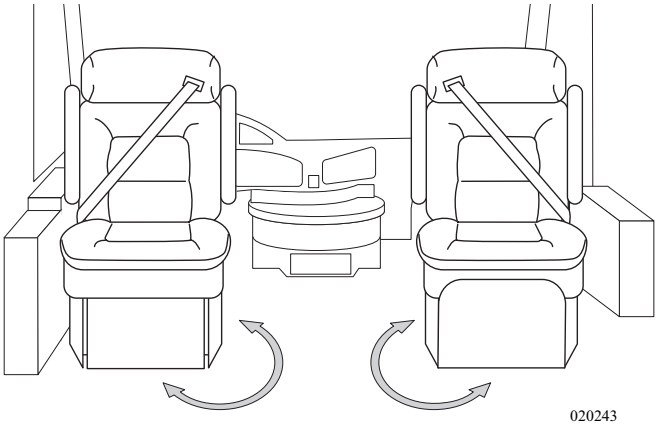


## SOFA BED CONVERSION

5

The sofa will convert easily into a bed. The sofa comes equipped with safety belts and these should be used if occupied during travel.

**Sofa to Sleeper:**
- Raise the sofa seat base until seat base and backrest form a “V” shape by lifting up from the center of sofa just below the seat cushions.
- Push down on seat base until the seat base and back-rest are flat.
- Fold seat belts out of the way.

**Sleeper to Sofa:**
- Lift the seat base up until seat and backrest are in a “V” shape.
- Push down on seat base.

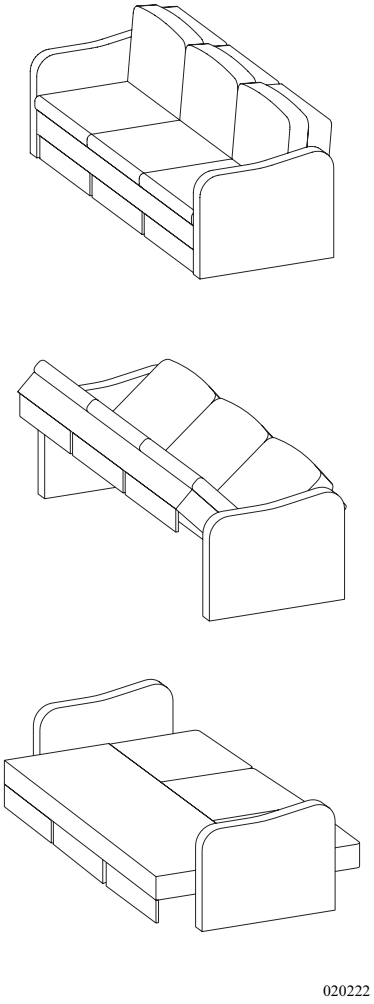

## DINETTE BED CONVERSION (Optional)

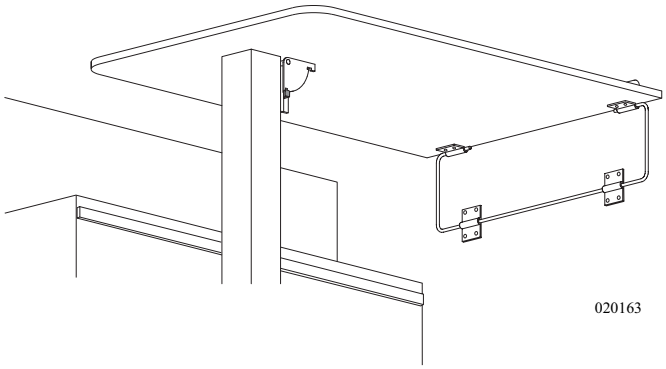


**The booth dinette easily converts into a bed:**

- Lift seat cushions to an angled vertical position.
- With a firm grip, lift front edge of the table approximately six inches and push table leg lock to side.
- Swing the table leg up and lock into a horizontal position.
- Continue lifting table until table stays are clear of retainers. Pull outward and lower table down.
- Use both seat cushions and one back cushion for a mattress. Leave one back cushion in a vertical position.

**WARNING: Do not occupy the booth dinette, if not equipped with safety belts, or the dining chairs while the motorhome is in motion. To avoid personal injury to occupants in case of a crash or sudden stop, chairs must be stored in an enclosed area or secured with tie down straps while the motorhome is in motion.**

## STORAGE - UNDER BED

To use the storage compartment located under the bed, locate and unlock the bed deck latches. Lift up the bed by the front edge of the mattress platform. Gas struts hold the mattress and platform open.

**NOTE: Do not over stress gas struts by rapidly opening or closing the bed access cover, as this action can damage the struts or mounts. In extreme cold gas struts may not hold the mattress platform in the open position.**

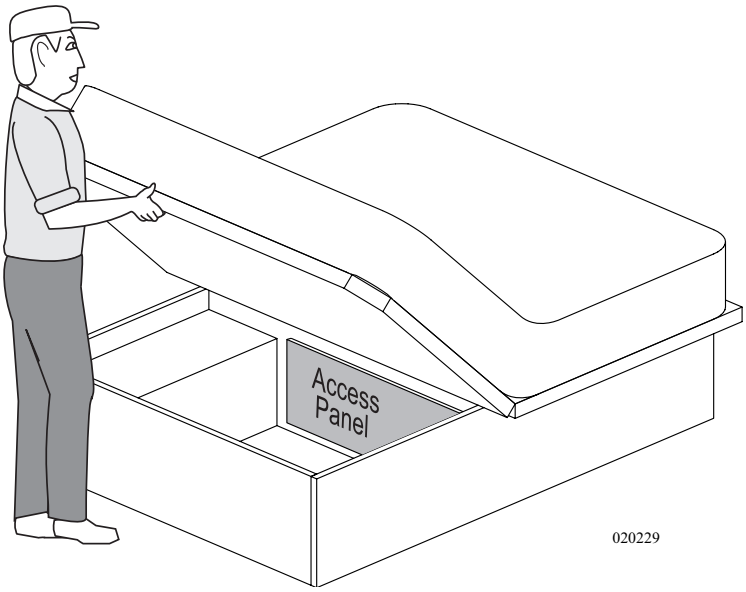

## SUPER SLIDE (Optional)

The Kwikee Super Slide is an option that is available for use in the storage compartment bays of your motorhome. This allows for the pay load to slide outward for easier access.

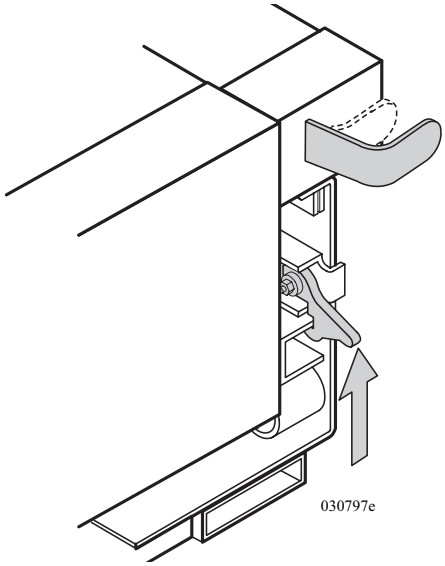


- The motorhome must be level before opening.
- There are two latch releases: lift and hold up to release one, pull outward while pulling on the super slide to release the other.
- The maximum weight capacity is 1,000 lbs. Never exceed this amount.

**WARNING: The motorhome must be level when sliding the drawer out of the bay compartment. The drawer can slide out abruptly and cause bodily harm when the motorhome is not level.**

**To Lower Ladder:**

- Push up on lower section of ladder to unlock hinge.
- Lower ladder. Engage ladder legs with bottom locks.
- Install clevis pin and hair pin clip.

**NOTE: Maximum weight is 300 lbs.**

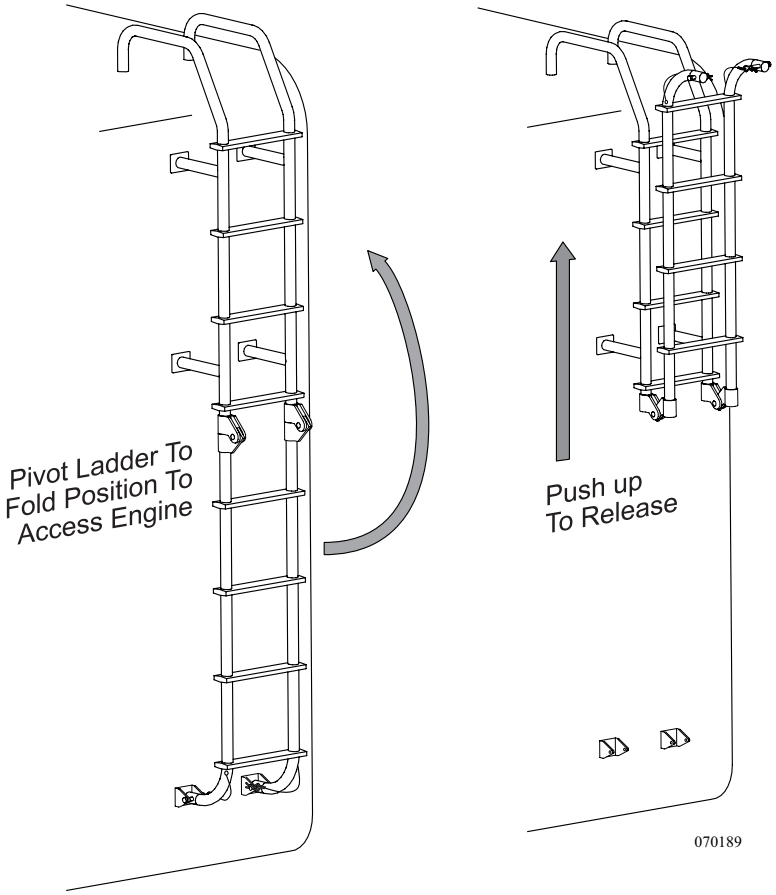

## RADIO, NAVIGATION & ALADDIN™ SYSTEM

The Panasonic monitor performs a variety of functions and displays such as radio and CD, navigation GPS system and the Aladdin System. These instructions are a guide on how to obtain the different systems available. General operating instructions are provided in other areas of this manual.

**INFORMATION: For detailed operating instructions of any system, please refer to the manufacturer's owners manual.**

**To Play the Radio:**

1. Turn on the interior house power using the battery cut-off switch.
2. Press the **OPEN/CLOSE** button on the radio.
3. Press the **blue POWER/MODE** button until the **Radio** displays.
4. Use the **DISC/BAND** button to alternate between AM and FM. Use the **TRACK** button to change stations.

**To Play a CD:**

1. Turn on the interior house power using the battery cut-off switch.
2. Load the CD changer with desired discs.
3. Press the **OPEN/CLOSE** button on the radio.
4. Press the **blue POWER/MODE** button until the **CD** displays.
5. Use the **DISC/BAND** button to alternate between the discs. Use the **TRACK** button to skip or fast-forward through tracks on a disc.

**To Use the Navigation System:**

1. Turn on the interior house power using the battery cut-off switch.
2. Press the **OPEN/CLOSE** button on the radio.
3. Press the **blue POWER/MODE** button to turn on the monitor.
4. Turn on the **NAV ON/OFF** switch on the center dash panel.
5. Press the Navigation (**NAVI**) button on the monitor

**Tips:**

- Press and hold the **blue POWER** button to turn the monitor off.
- The monitor uses the Camera input for VCM and Navigation display. If the system fails to display the VCM or Navigation system, reset the input to Camera. Press the **Menu** button. Scroll the hand cursor to **Camera** using the **TRACK** button. Press **ENTER**.

**To Display the Aladdin™ System:**

1. Turn on the interior house power using the battery cut-off switch.
2. Press the **Open/Close** button on the radio.
3. Press the **blue Power/Mode** button to turn on the Panasonic monitor.
4. Turn on the **Aladdin Reset/Storage** switch.
5. Press down on Aladdin joystick to display the main menu.
6. Use joystick **Up/Down** to scroll the menu. Press joystick **Right** to **enter**. Press joystick **left** to **exit**.

**NOTE: The Aladdin System displays various engine data, road and trip monitoring and house electrical statistics.**

**INFORMATION: Please refer to the Aladdin System for detailed operating instructions.**

**To Display the Aladdin™ System on the Front TV:**

1. Turn on the interior house power using the battery cut-off switch.
2. Hook to shore power, start the generator or turn on the inverter.
3. Press the **Open/Close** button on the radio.
4. Press the **blue Power/Mode** button to turn on the Panasonic monitor.
5. Lower the television.
6. Using the **RM42B** remote, press the **S/Video** button until **Video Composite** displays.
7. Turn on the **Video Selector Box**. Set **TV 1** to **AUX**.
8. Turn on the **Aladdin Reset/Storage** switch.
9. Press down on Aladdin joystick to display the main menu.
10. Use joystick **Up/Down** to scroll the menu. Press joystick **right** to **enter**. Press joystick **left** to **exit**.

**To Display the Aladdin System on Rear TV:**

1. Turn on the interior house power using the battery cut-off switch.
2. Hook to shore power, start the generator or turn on the inverter.
3. Turn on the **Aladdin Reset/Storage** switch.
4. Turn on the Video Selector Box. Set **TV 1** to **AUX**.
5. Using the **Panasonic TV** remote, press the **red Power** button. Press the **TV/Video** button until **Video 1** displays.
6. Press down on the bedroom Aladdin joystick to display main menu.
7. Use joystick **Up/Down** to scroll the menu. Press joystick **right** to **enter**. Press joystick **left** to **exit**.

## RADIO & NAVIGATION SYSTEM (Optional)

The system combines a radio, back-up camera and navigation system. A 7" LCD screen is used as a display for the back-up camera and navigation system programming. The radio screen may be stowed when not in use.

**NOTE: It is recommended to thoroughly read all of the following instructions before attempting to program the system. These instructions are a simple guide to some of the features and are not intended as a replacement for the systems manual. For ease of operation, have a partner read the instructions while programming the system.**

**NOTE: The navigation system is widely used in Europe. Some information services are not available in the United States. Certain screens will not apply.**

**Radio Features Include:**
- Navigation map display.
- On screen programming.
- Back-up camera automatically displays when the motorhome transmission is placed in reverse.
- CD changer operation.
- Adjustable color and brightness settings.
- Twelve AM and eighteen FM preset stations.
- Adjustable tilt angle.

**Navigation Features:**
- Virtual map of the United States.
- Instant location display.
- Alternate route planning.
- A 12 or 24 hour clock.

**NOTE: The radio system will operate either with the radio remote control or from the radio push buttons. The navigation system operates with the navigation remote only.**

**Power Requirements:**
- Main battery disconnect switches, located in the battery compartment, must be **ON**.
- House battery cut-off switch, located next to the entry door, must be **ON**.

## *Operation*

Operation for the monitor is done from the Panasonic remote or the Panasonic monitor.
- Push the **OPEN/CLOSE** button. The radio will extend then tilt to an upright position.
- Press the blue **POWER** button to turn the monitor on.
- Press the **MODE** button to select between the Radio and CD changer. **VTR** (Video Tape Recorder) and **AV** (Audio/Video) are not used.

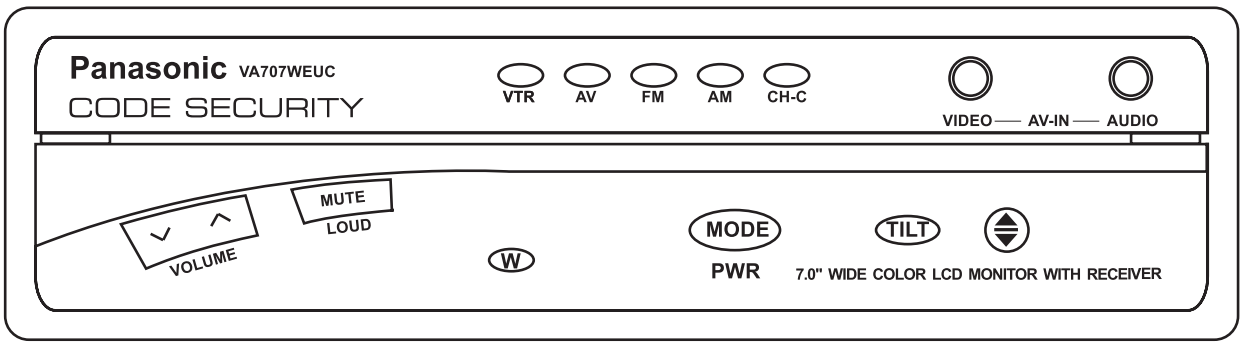


020100

## Back-up Camera Operation

The back up camera automatically displays when the motorhome is placed in reverse. To display the camera continuously, momentarily press the menu button. Use the **LEFT** or **RIGHT** arrows until the hand points to camera. Press **ENTER**. The selection will be highlighted in yellow.

There are four different aspect ratios of the camera lens, which is displayed in the upper left hand corner of the screen:

1. **FULL** 2. **ZOOM** 3. **JUST** 4. **NORMAL**

Press the **ASPECT** button to change the camera lens ratio, which will obtain a different perspective.

## Radio Operation

5

**Radio Station Select and Preset:**

To display the radio, press the **MODE** or **MENU** button. The **UP** and **DOWN** (**DISC/BAND**) buttons select between the AM or FM library.

- **UP** button is the FM library.
- **DOWN** button is the AM library.

The **LEFT** or **RIGHT** (**TRACK**) buttons change the radio station. Press and hold either button to scroll or press either button momentarily to select an individual station.

**To enter a selected station into memory:**

Press and hold any number between **1** and **6** on the radio remote for three seconds.

**To enter programming mode:**

Push and hold the **MENU** button approximately two seconds to enter the programming menu. Three categories are available:

1. **USER** 2. **SOUND** 3. **SCREEN**

Use the **UP**, **DOWN**, **LEFT** or **RIGHT** buttons to scroll through the categories and features. Press **ENTER** to select any area (highlighted in pink) or to select a setting.

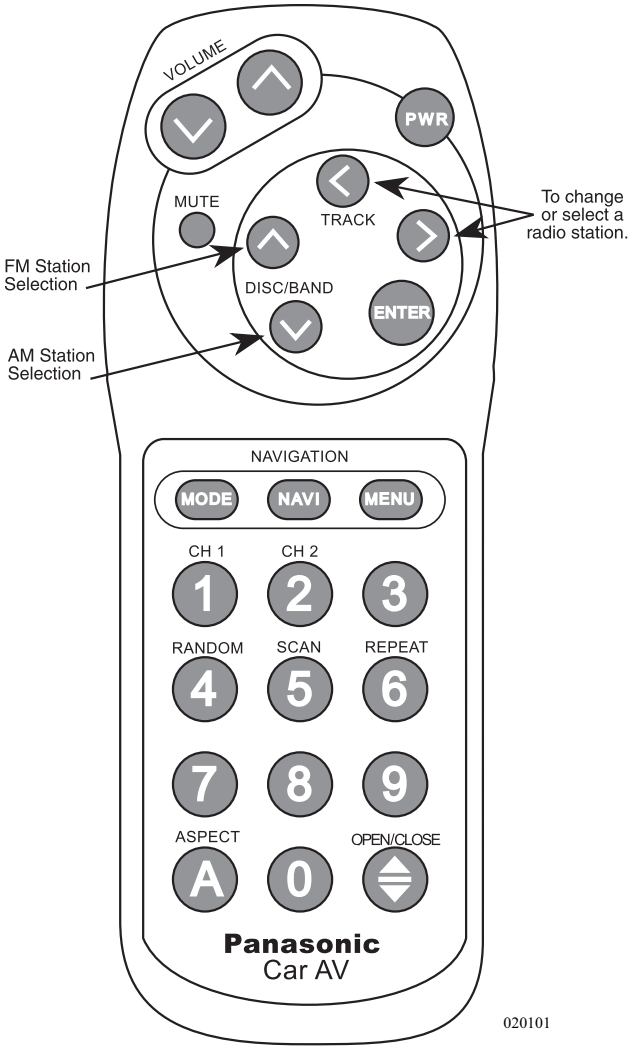

**To set the radio clock:**

- The clock is located under the **USER** section. Continue to scroll up or down to the **CLOCK** section.
- Scroll to the section **CLOCK OFF**: Press **ENTER** to turn the clock display on or off.
- Scroll down to the **ADJUST** section, then press **ENTER**. Use the **LEFT** arrow to set the hour. Use the **RIGHT** arrow to set the minute. Press the **MENU** button when done.
- Scroll down to **SEC RESET**. Press **ENTER** to reset the clocks internal seconds to the beginning of the minute.
- Exit the programming mode by pressing the **MENU** button.

## *Navigation System*

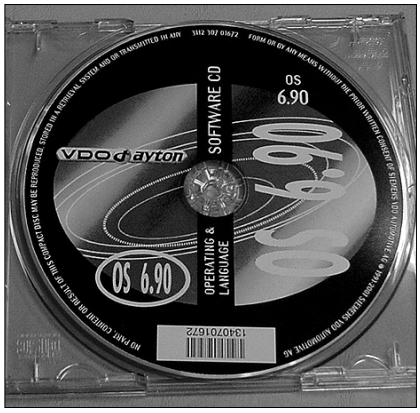


MVC724.TIFF

The navigation system uses a seven-disc map library to operate. The library is located in the owner's information packet. The system remote control is used to program settings and retrieve information. Only areas that are highlighted are accessible. A planned destination, point of interest from the virtual map and an alternate route may be programmed. When a destination has been programmed, it may be necessary to change map discs while in route. An audio voice will provide instructions.

**NOTE: Thoroughly read all of the following instructions before attempting to program the navigation system. These instructions are a simple guide to some of the features. It is not a replacement for the system manual. It may be easier to have a partner read the instructions while programming the system.**

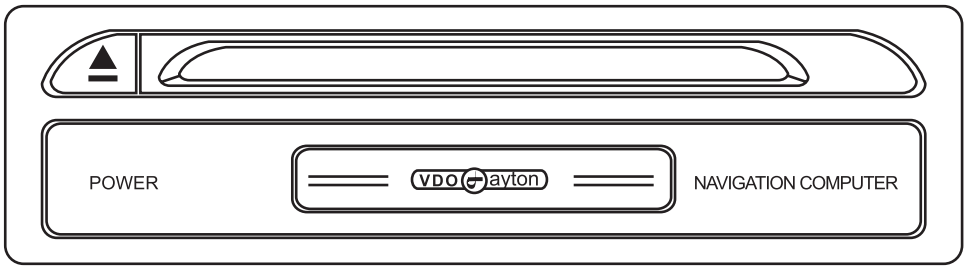


020099

Before beginning navigation system programming, ensure the radio screen is programmed to display the navigation system.

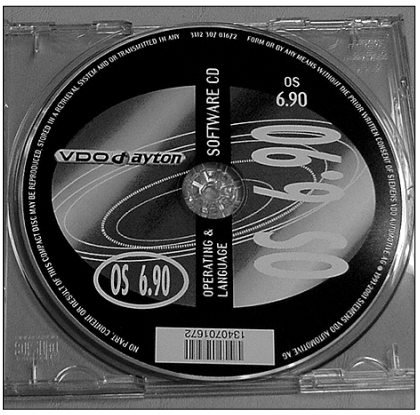


- With the monitor **ON**, enter the radio programming mode by pressing the **Menu** button for two seconds.
- Under the **USER** section scroll up or down to the **NAVI IN** section. Press **ENTER**.
- Using the **LEFT** or **RIGHT** buttons move the hand cursor to **VTR**. Press **ENTER** to select. Selection will be highlighted in yellow.
- Press **Menu** to exit programming mode.
- The navigation system may now be viewed.

Familiarize yourself with how the system functions; experience is the best teacher. Be patient. The system, in many cases, will select the correct dialogue box automatically. Press **OK** on the navigation remote to enter any dialogue box. The **RETURN** box will return to the previous screen.

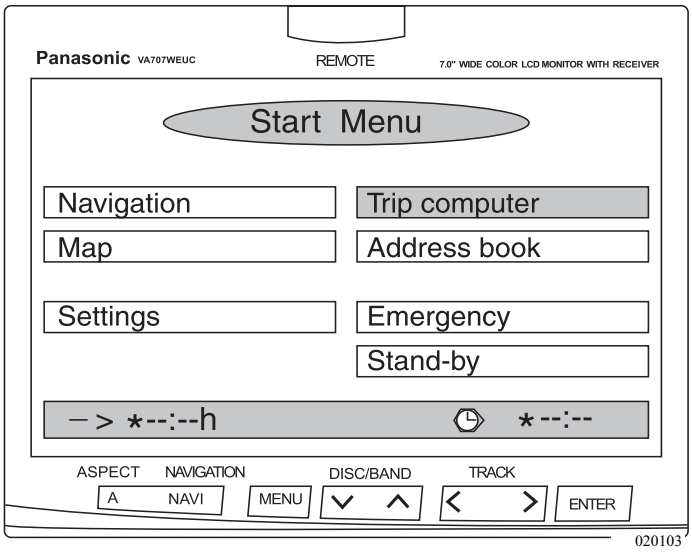


- Using the Panasonic remote or the monitor, select **NAVI**.
- A warning statement will appear. **Read and understand this warning**.

- Press the **OK** button on the navigation remote to accept this warning. A statement will appear indicating to install a map disc. Press **OK** to advance to the next screen. A map disc will be installed later.
- To experiment with the Start Menu use the **UP**, **DOWN**, **LEFT** or **RIGHT** buttons to highlight the available fields. Only highlighted fields are accessible.
- Press the **OK** button to enter information or to select a different field that is highlighted.
- Proceed to the next step.

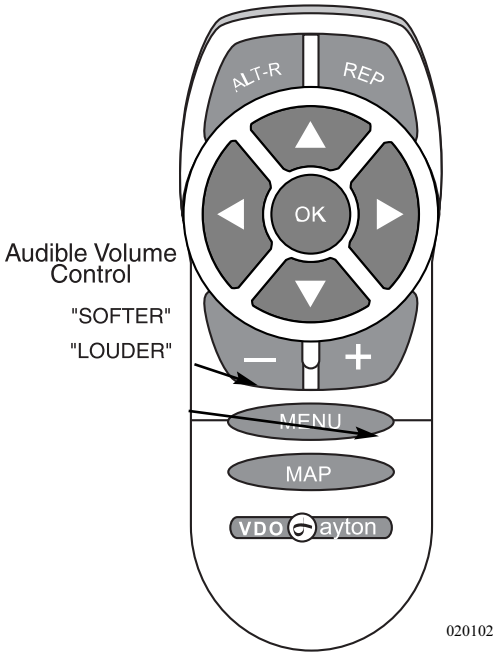

**WARNING: Do not attempt to program, alter or retrieve information while the vehicle is in motion. An accident resulting in injury or death may occur.**

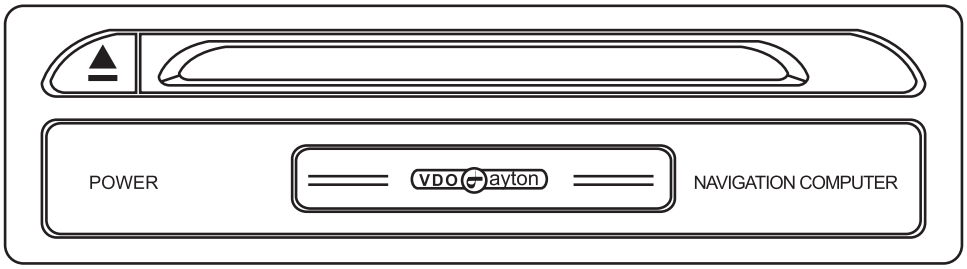


**Programming Guidance to Point of Interest Using Map:**

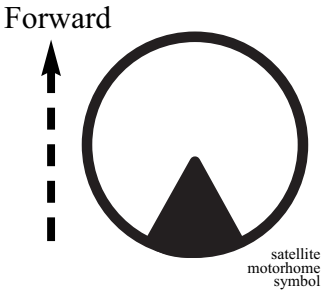


*Direction of Travel.*

- Insert a map disc with the area of interest or destination, with label up, into the navigation system.
- Using the navigation remote, press the **OK** button.
- Highlight the **NAVIGATION** text box and press **OK**.
- Select **MAP** from the menu and press **OK**. The location of the motorhome appears as a circle. The black area inside the circle is displaying the forward direction of the motorhome.
- Browse the current map by using the **UP**, **DOWN, LEFT** or **RIGHT** buttons on the remote.
- Press **OK** to open the Function option in the map area (upper left).
- Scroll down and select the Scale option to increase or decrease the field of view from 400 feet to 50 miles. To change the scale use the **UP** or **DOWN** buttons then press the **OK** button. Cities are best displayed with the map scaled to 10 miles.
- When an area of interest is selected from the map, press **OK** and enter the Function option. Scroll down to **DESTINATION** or **STORE DESTINATION**. Press **OK**.

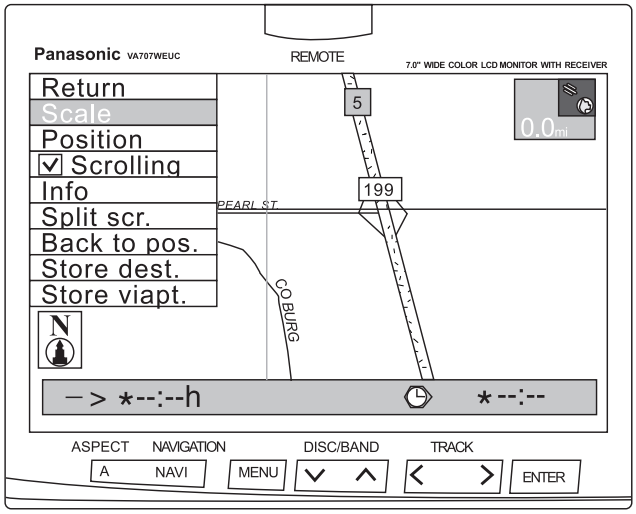


020113

- Press **OK** again and enter the function option. Scroll up and select **RETURN** by pressing **OK**. The system will return to the **NAVIGATION** menu. Scroll to highlight **NAVIGATION**. Press **OK**.
- The **Guidance** box is automatically highlighted. Press **OK**. The map returns to the screen. The circle indicates current location. Miles to go and general direction to the location is displayed in the upper right-hand corner. Begin driving. Audio guidance will instruct you to the destination. Adjust the volume as necessary.

**Programming a known location:**

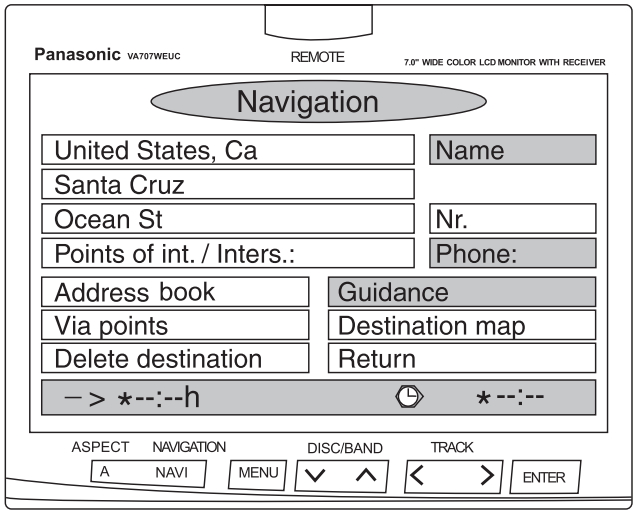

020106

- Insert a map disc containing the desired location.
- Start from the Main Menu. Use the **OK** button on the remote to enter **Navigation** dialogue box.
- Enter the **Country** dialogue box. Enter the United States for the location and press **OK**.
- Enter the **City** dialogue box. The alphabet will appear.
- Use the **UP, DOWN, LEFT** or **RIGHT** buttons to orient the correct letter. Select each letter. If a mistake is made, press **Delete**. If the name of the city is more than one word, use the Space button. If the List box is highlighted after the city name is entered, the system will ask which city (there may be more than one city with that name).
- Enter the **List** box. Scroll to the correct city and select by using the **OK** button.

**NOTE: The system will automatically narrow the field of search by eliminating non-essential letters. Some roads or small cities may not be listed. In this instance, try scrolling the map to locate the desired location. If the location is mapped, use the Map set of instructions to obtain guidance.**

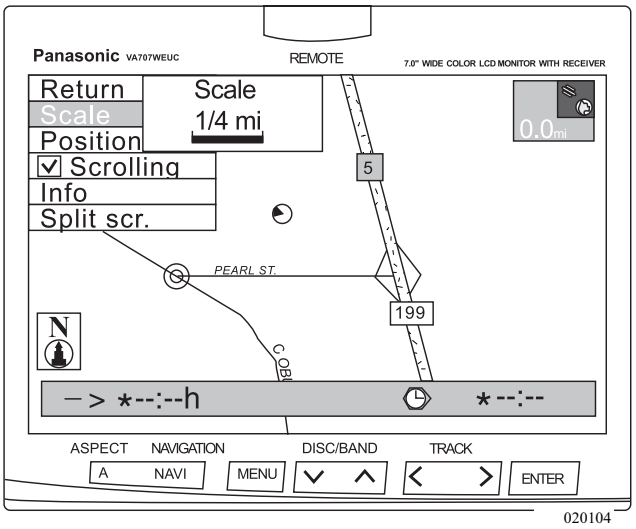

020104

- Enter the Road dialogue box. Select each letter. If the name of the road is more than one word, use the Space button.
- If the street number is known enter the Nr dialogue box. The number screen will appear. Enter the address.
- Select the Guidance dialogue box and the map will appear. The circle indicates current location. Miles to go and the general direction to the location is displayed in the upper right-hand corner. Begin driving. Audio guidance will instruct you to the destination.
- The Destination Map will display the preset destination with the map scaled to ¼ mile.
- Enter the Function dialogue box. Use the Scale to scale down the map size, increasing map definition.

**NOTE: Complete and return the warranty registration form located in the map library. Map discs will be updated periodically. When any or all updated discs are released, one full set will be sent free of charge to the registered owner.**

## CITIZEN BAND RADIO (CB)

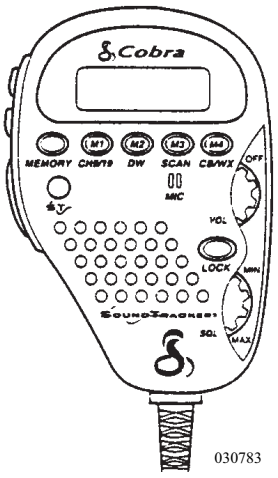


The Citizens Band Radio (CB) is used for two-way, short-distance business and personal communications. The CB radio can be useful when traveling if operated properly.

Some limitations may apply to the use of the CB radio. The CB radio is actually a low-powered transmitting device that works well when within a line of sight of the person being spoken to. Many factors can limit the range of the CB radio, including the following items: terrain, trees, other vehicles, weather conditions and/or the power of the radio and its antenna. Only one radio can occupy the same channel at one time. Consequently, the radio with the greatest power and best antenna will always overpower the weakest one.

Some motorhome owners turn on the CB radio first thing, and leave the CB on the entire trip, to stay informed of potential road hazards reported by truckers or other CB owners during transit. The CB can be a very useful tool if, for example, there are problems with the tow car.

**The CB Radio can assist in the following:**

1. Warn of traffic tie-ups ahead.
2. Provide weather and road information.
3. Provide help fast in event of emergency breakdown.
4. Suggest good spots to eat and sleep.
5. Make long trips more interesting and fight driver's fatigue.
6. Provide direct contact with office or home.
7. Make friends during travel.
8. Provide "local information" to find your destination.
9. Communicate with friends and family during outdoor activities.
10. Help law enforcement officers by reporting drunk and reckless drivers.

### *CB Components*

**Volume Control:**

The radio off/on volume control switch. is used to engage the radio and provide volume control. Volume control deals strictly with receiving (what is audible) and has no effect on the transmission level (how loud it will transmit over the airways).

**Squelch:**

Squelch control is also available. This control is first turned up to a point where static or background noise is heard and then reduced to a point where the static disappears.

**Channel Selection:**

There is also a channel selector which is used to select the channel of operation (1 through 40). For most highway uses, channel 19 is used. This channel is used by most truck drivers. It is useful to monitor channel 19 to obtain information concerning traffic delays, construction, lane closures, etc.

When traveling with other CB users, it is wise to use a channel other than 19 to allow for conversation without interruptions.

**CB Microphone Function:**

The microphone is the key to using the CB radio. A push button switch is located on the side the microphone. When the button is pressed, the CB radio switches from a listening device to a transmitter. Anything spoken into the microphone is transmitted over the airway of the channel selected. To carry on a conversation, after each outgoing transmission, release the push button switch in order for a reply to be received. The radio cannot receive and transmit at the same time. Conversations should be brief as only a single CB radio can occupy the particular channel at one time.



**Operating Procedure for Emergency Communication:**

**1.** For emergency communication, set the CB radio to Ch. 9. For non-emergency communication, select the desired channel by pressing the Channel up/down-tuning buttons until reaching the channel desired.

**2.** When asking for emergency aid on Channel 9, request a React base (if available) to respond by saying "Break Channel 9 for a React base" and provide the CB Distress Data (called "**CLIP**"):

**CLIP**

**C**ALL SIGN - Identify yourself and vehicle.

**L**OCATION - Be exact.

**I**NJURIES - Number. Type. Are persons trapped?

**P**ROBLEM - Give details and be specific about the assistance needed.

Transmit the "CLIP" repeatedly so the nearest monitor may be of assistance.

**NOTE: Channel 9 is for emergency use only.**

**CB Radio Rules of Use:**

**1.** Do not carry on a conversation with another station for more than five minutes at a time without taking a one-minute break to give others a chance to use the channel.

**2.** Do not blast others off the airway by overpowering them with illegally amplified transmitter power or illegally high antennas.

**3.** Do not use the CB to promote illegal activities.

**4.** No profanity allowed.

**5.** Do not transmit music over the CB airway.

**6.** Do not use the CB to sell merchandise or a professional service.

## Transmission

**CB Transmission Range:**

All CB radios transmit using the maximum FCC allowable power output of four watts. The type of antenna used, its condition, location and physical length, and the proper matching of the Standing Wave Ratio or SWR can effect the amount of power that actually goes out.

Other factors that can enhance or detract from the effective range include: the environment that the CB is used in, interference from other CB radios, tall buildings or trees and certain atmospheric conditions.

If all negative environmental factors were eliminated, a properly set up base station could transmit up to 10 to 15 miles. A mobile unit could transmit five to seven miles, and a hand held unit up to approximately two miles with the only variable being the type of antenna used with the unit. Unfortunately, optimum conditions do not always exist and the range of the unit will be less dependent on the conditions it is operated in.

**CB Radio Antenna:**

A good antenna is necessary for optimum performance of the CB radio. The type of antenna used depends upon the type of CB and its intended use. Purchase the best quality antenna for the greatest impact on the overall performance of the CB radio.

Mobile CB antenna come in many different sizes and configurations for just about any need or application. In general, the longer the antenna the better the performance, although the longer lengths of 102 inches may not be practical for most people.

Different types of antenna mounts are available. Some antennas mount to the roof gutter or the mirror mount. Some mount to the vehicle bumper. Some have a magnet mount that attaches to any metal surface on the vehicle body. If the mobile radio is equipped for weather reception, a center-loaded antenna will fit that requirement. If good weather reception and regular CB distance is a priority, a dual band antenna is recommended. For distance only, a base loaded antenna is recommended. If the vehicle does not have a metal body, a groundless plane antenna is recommended. These antennas are designed for special applications where grounding the antenna is a problem.

**SWR (Standing Wave Ratio):**

In order to set the SWR (Standing Wave Ratio) on the unit, the CB radio must be equipped with a built-in SWR meter or an external SWR meter. Using an external SWR meter will also require a short piece of co-axial cable with CB plugs on both ends. Attach the external SWR meter according to the instructions included with the meter.

**To Set the SWR (Standing Wave Ratio):**

- Make sure the antenna is properly mounted and grounded. If setting the SWR on a mobile antenna, make sure all vehicle doors are closed, all other accessories are turned off and the vehicle is in an open area away from any obstructions when setting the SWR.
- Set the CB radio to the CB mode and to channel 20. On Cobra radios with a built in SWR meter, set the S slash RF, SWR, CAL (calibration) switch to the CAL setting.
- Push and hold the "push-to-talk" button on the microphone. This causes the needle on the SWR meter to swing to the right. Adjust the needle to the calibration mark on the meter by turning the CAL knob.
- Continue pressing the push button on the microphone and move the S slash RF, SWR, CAL knob to the SWR setting. External SWR meters will have to be set to the SWR setting. This will cause the SWR meter's needle to swing to the left. A reading of 3 or above will impact the performance of the radio and should be adjusted downward. A reading of 1.5 is average and acceptable under most conditions. A reading of 1 is ideal.

**Adjusting the SWR Setting:**

To adjust the SWR setting, try either extending or retracting the antenna in small increments while repeating the procedure after each change until the best setting available is reached. If retracting the antenna is necessary to obtain a better reading, it is acceptable to clip the whip in small increments to obtain the proper length. Do not cut more than ¼ of an inch at any given time, as the adjustment needed may be very small.

Check the SWR reading on channel 40 and channel 1. If either of these channels is above 1 to 3.0, adjust the antenna so that the SWR setting is acceptable for that channel while maintaining the lowest possible reading on channel 20. It is important to note that adjustments made for the optimum SWR setting on one channel will affect the SWR setting of another channel on the other side of the dial. If channel 1 is optimized, channel 40 will suffer. Try to balance adjustments to optimize across all channels.

If an acceptable reading cannot be obtained, recheck the antenna mounting and grounding. A properly ground antenna is necessary to obtain an acceptable SWR reading.

## *Weather Alerts*

**Weather Alerts:**

A Weather Alert warns of a weather emergency as defined by the National Oceanic and Atmospheric Administration of the U.S. Department of Commerce commonly know as NOAA.

NOAA maintains a system of approximately 380 stations throughout the United States that transmit continuous broadcast of the latest local weather conditions 24 hours a day, 7 days a week. A broadcast is announced on one of seven high-banded FM frequencies, tailored to suit the needs of local listeners.

During severe weather the normal NOAA forecast is interrupted with special warning messages. The NOAA then transmits a 10 second signal that can be picked up on CB radios equipped with the Weather Alert feature. This signal can be picked up whether the radio is turned on, off or in the CB mode. During the transmission of a weather emergency, the radio will emit a high pitched tone to alert the user to tune in to one of the weather channels and listen for emergency information.

**NOTE: It is normal for a Weather Alert CB Radio to beep for a second when the unit is turned on or when power is first applied to the unit. This is only a self-check tone.**

## CELL PHONE ANTENNA

The motorhome is equipped with a cell phone antenna. The antenna lead is located behind the dash instrument cluster. To access the lead remove the inspection panel located on top of the dash pad. The antenna lead run is installed from the roof down the driver's side A-pillar. This is the section between the drivers' side window and the windshield. The coiled antenna lead should be located toward the front firewall, directly behind the instrument cluster.

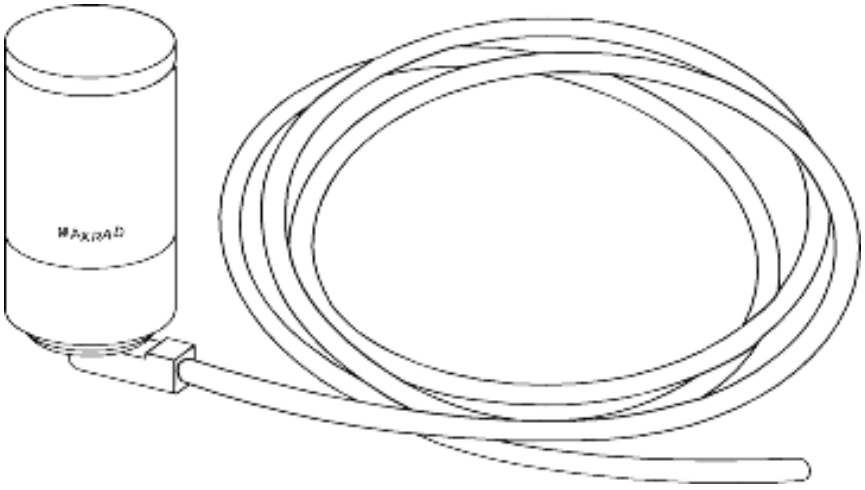

## ENTERTAINMENT SYSTEMS

The components used to make up the entertainment center are carefully selected to provide the highest quality in audio and visual enjoyment. There are several pieces of equipment which comprise the entertainment system. The following paragraphs will discuss the various components and their operation. Use the instructions given in the Video Selector Box section to use these components.

**Home Theater System:**

The remote for the home theater system is a versatile component of the system. The programmable remote can control television if the manufacturer's codes are programmed. A complete listing of the manufacturer's codes is located in the AV System Guide supplied in the warranty information file. The Home Theater System can be used as a tuner for radio listening.

A built-in DVD player enables DVD, CD and Video CD to play through to the televisions.

**Video Cassette Recorder (VCR):**

The videocassette recorder is the same as those found in most homes. The VHS Compatibility allows recording and playing back programs on standard VHS tapes. The Audio/Video Input Jacks in the front allow for quick, easy connections of additional video equipment. Easy Setup procedures provide the flexibility to quickly adapt the configuration for a variety of installations.

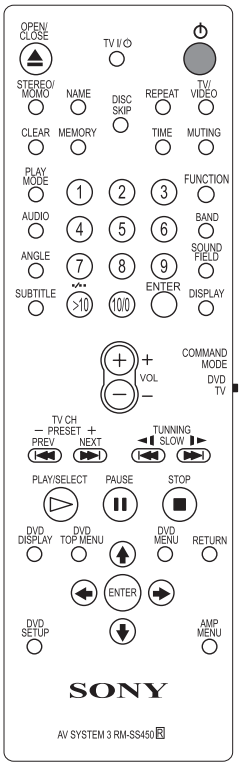


031003B

### *Television (Front) w/Lock-out Feature*

The motorhome is equipped with a remote control color television. The ignition switch controls the outlet for front TV so that the front TV can only be operated while the vehicle's ignition is off. The TV operates from 120 Volt AC provided by shore power, the generator or the inverter. Viewing time of the front TV from the inverter depends on the state of charge of the house batteries and any additional 12 Volt DC lighting being used.

**NOTE: The ignition must be off to lower or raise the Plasma TV.**

### *Hook-ups - TV Cable, Computer & Television*

The motorhome is equipped with cable TV and telephone hook-ups, located in the electrical service center. For convenience, there are auxiliary outlets located at the co-pilot seat and on the optional computer desk. This connection is set up for a telephone or laptop computer.

## HOME THEATRE COMPONENTS

The home entertainment system is very comprehensive with each component carefully selected to provide the highest quality in audio and visual enjoyment. The following paragraphs will discuss the various components and how to operate the system.

**NOTE: The entertainment system requires 120 Volts AC to operate. Hook to shore power, start the generator or turn on the inverter. The satellite system requires 12 Volt DC to operate. Turn on the interior house power using the battery cut-off switch.**

**NOTE: These instructions are a quick start guide and not a replacement for the individual component manuals. For detailed component operating instructions, refer to their respective manual.**

### *Flat Screen LCD - Front TV*

The flat screen LCD TV is a monitor only. The TV is equipped with speakers or use the home theater for sound. A separate tuner is used to select channels. Extra RCA input jacks for a game console or camcorder and a computer terminal port are located on the front of the tuner.

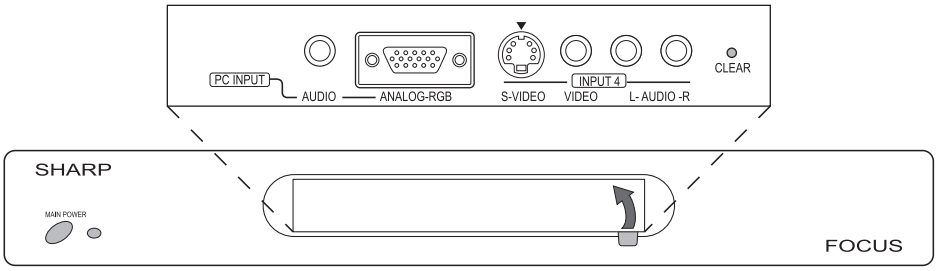


*TV Tuner*

### *Plasma Front TV (Optional)*

The 42" plasma television is mounted to an assembly that will stow the television into the ceiling during travel. The "hide-a-way" system uses 110 Volt AC motor to lower and raise the television. A 12 Volt DC ignition safety lock prevents the television from lowering during travel. The plasma TV is a monitor only. The TV uses the home theater for sound. The VCR is used as a tuner.

**NOTE: The ignition must be off to lower or raise the Plasma TV.**

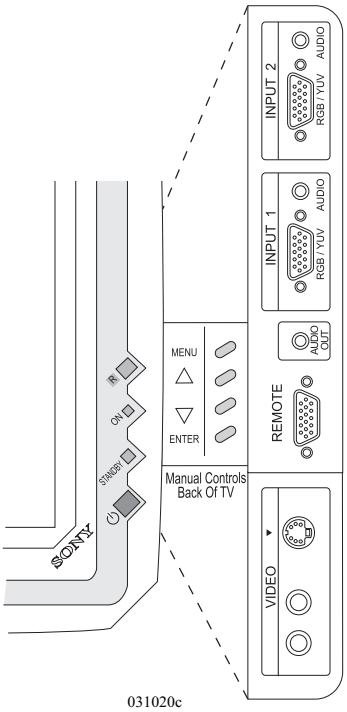

## RADIO - BEDROOM

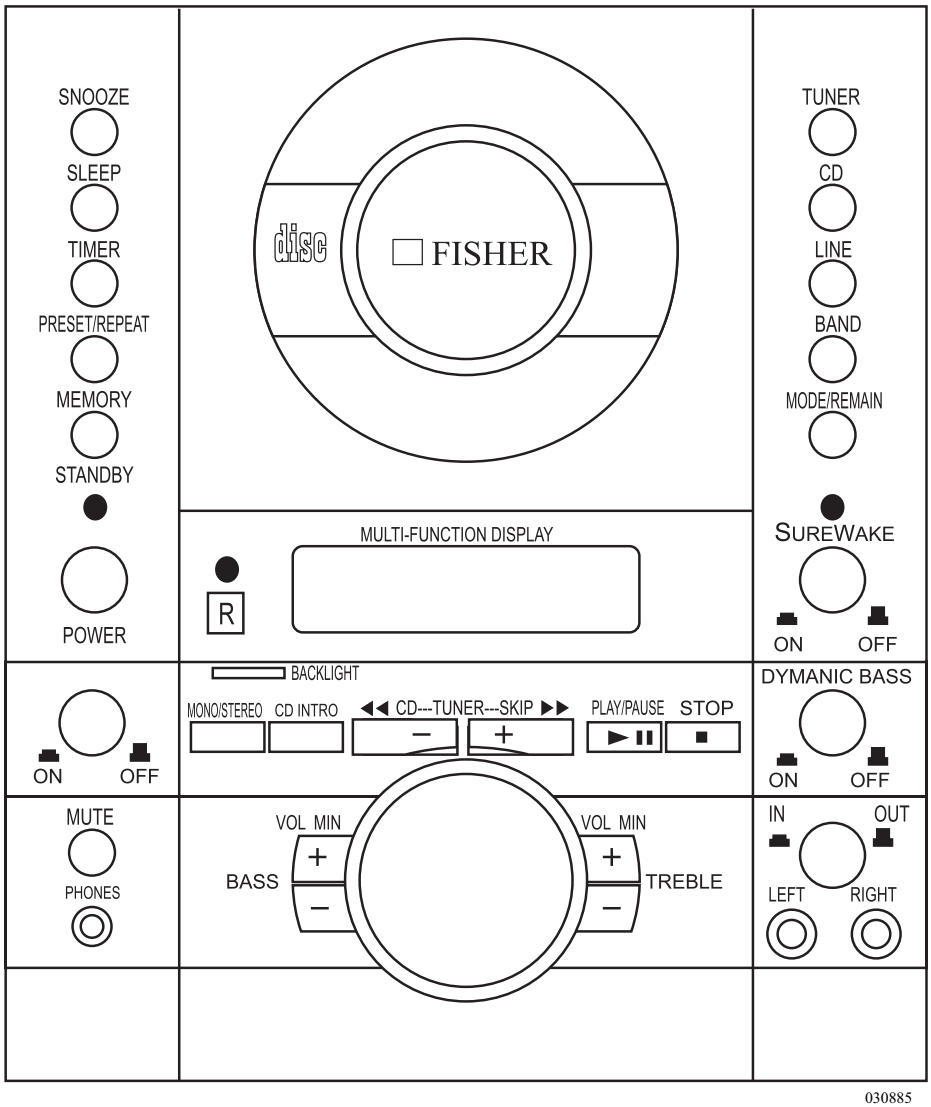


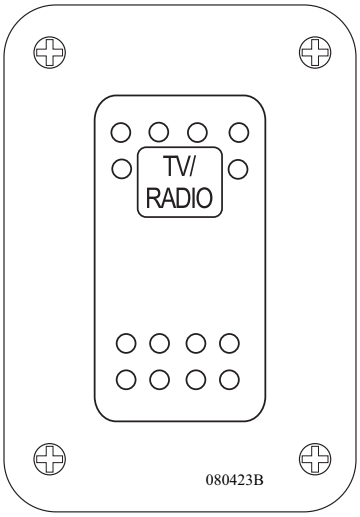


The bedroom stereo system is a three-piece system consisting of **AM/FM stereo tuner**, **CD Player** and **Clock**. The unit also incorporates a remote control for ease of operations. The system operates from 120 Volt AC and is powered from Shore Power, Generator or Inverter. Eight "C" cell batteries (if installed) enable all programmed settings to remain in case of loss of 120 Volt AC power.

**INFORMATION: Detailed information with CAUTION or WARNING instructions for the bedroom radio can be found in the manufacturer's operation manual.**

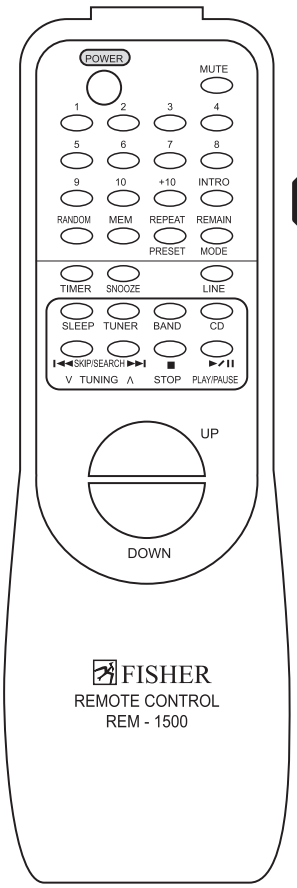


030889

**To Set the Clock:**

1. Press the **POWER** button to turn off "**standby**."
2. Press the **MEMORY** button once. The minute segments display "**00**." The hour segments flash continuously.

**NOTE: Pay attention to the "AM" or "PM" setting.**

3. Press the **CD-TUNING-SKIP +** or **-** button to select the desired hour.
4. Press the **MEMORY** button again and the minute segments will flash.
5. Press the **CD-TUNING-SKIP +** or **-** button to select the desired minute.
6. Press the **MEMORY** button once more. The flashing stops and the time is set.

## *Bedroom TV*

The bedroom TV has a built in tuner and speakers. TV sound quality can be enhanced when playing the TV sound through the bedroom radio speakers.

The televisions have many different input signals available. Depending on preference these can vary from selecting between a satellite dish, DVD (Digital Video Disc) player and a roof antenna as an example. A video selector box interfaces these different input signals from the various components to the televisions.

The video selector box requires 120 Volt AC supplied from shore power, generator or the inverter. The red LED will illuminate when the Video Selector Box is on.

The Video Selector Box has four sections: TV numbers 1 to 4. Above each TV section are the different inputs available from the different components. An additional set of A/V jacks (3) is for the Aladdin System, located on the front of the Selector Box.

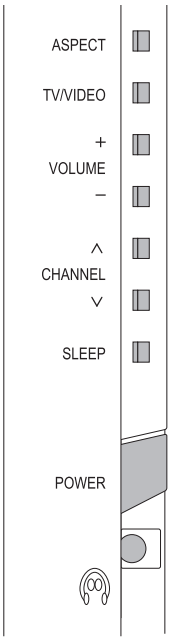


031024

- **Power Button -** Turns power **ON** or **OFF**.
- **TV1 -** Selects **Input** for the front television.
- **TV2 -** Selects **Input** for the rear television.
- **TV3 -** Not Used.
- **TV4 -** Not Used.
- **A/V Jacks (3) -** Aladdin System.

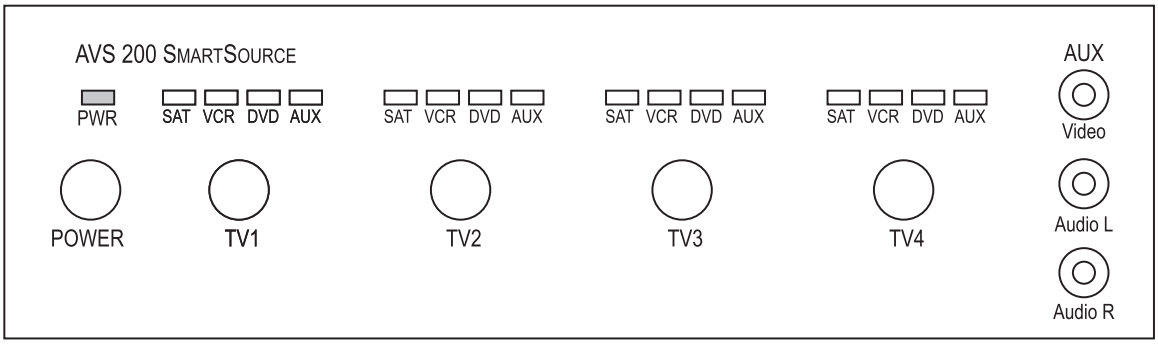


*RCA SA-155 Bedroom TV Amplifier*

031030

5

**Input Select Buttons (listed above each of the TV sections):**
- **SAT -** Satellite.
- **VCR -** Video Cassette Recorder.
- **DVD -** Digital Video Disc.
- **AUX -** Aladdin System.

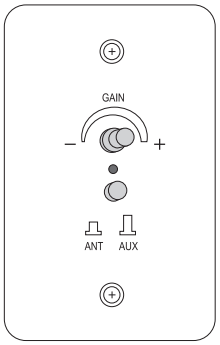


031010

## Shore Cable/Roof Antenna Selector Switch

The Shore Cable/Roof Antenna selector switch is used to select between the Roof Antenna (ANT) and Shore Cable (AUX). An adjustable gain control can enhance picture quality when set to Antenna.

## DVD Player

The DVD player is a multi-function component. It plays Digital Video Discs, built in radio and amplifier. The power button on the DVD player must On to place the system in Stand-by mode. The DVD player will then respond manually or when using a remote control.

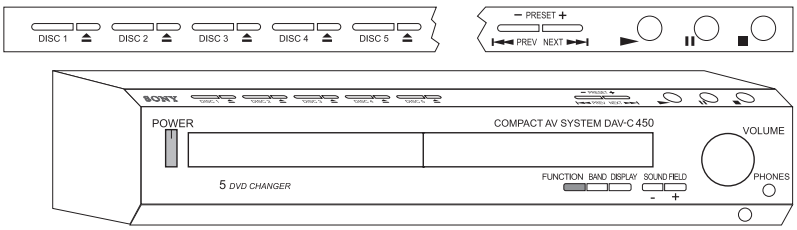


030969E

If the motorhome is equipped with the In-Motion system, press the remote **On** button to allow the dish inside the dome to rotate and acquire the satellite signal. If the motorhome is parked, the display can be turned off after the system has obtained the signal by simultaneously pressing the **Enter** and **(-)** buttons.

**INFORMATION: The satellite system has many features. Refer to the operators manual for in-depth operating instructions.**

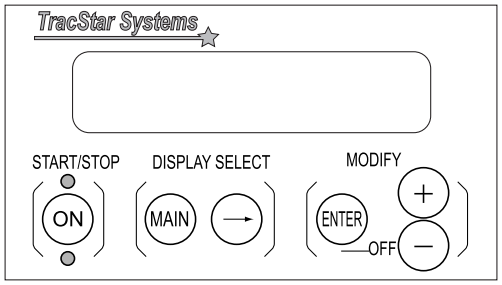


*In-Motion Control Panel* 031033

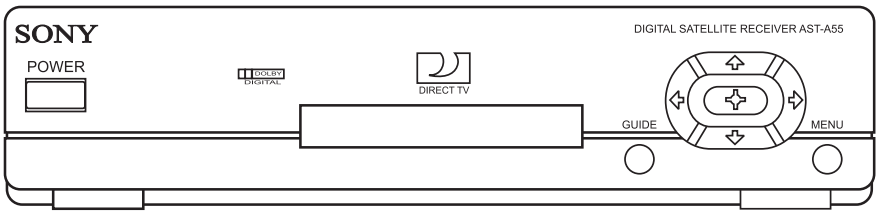


030932

## Plasma TV Operation

The motorhome is equipped with a High Definition satellite receiver. The receiver output and television input must be programmed accordingly when switching between Standard Definition and High Definitior.

**To Lower or Raise the Optional Plasma Television:**

1. Turn the ignition switch off.
2. Turn on the interior house power using the battery cut-off switch.
3. Hook to shore power, start the generator or turn on the inverter.
4. Clear the area surrounding the mechanism. Press and hold the Plasma switch to lower or raise the TV. Movement will stop when the switch is released.

**NOTE: These operating instructions are for the front Plasma TV. For bedroom TV operation, use the TV/Video button on the bedroom TV remote to select Input 1 when viewing a tape, Standard Definition satellite or DVD.**

**To Watch the Front Television from Roof Antenna or Shore Cable (Standard Definition):**

- Turn on the TV.
- Using the RM42B remote for the TV, press the S/Video button until "Video Composite" displays on the TV.
- Press the TV button on the Bose remote or press the Source button on the Bose system until "TV" displays.
- Select either Roof Antenna (ANT) or Shore Cable (AUX) on the selector switch.
- Turn on the Video Selector Box. Set TV 1 to VCR.
- Turn on the VCR. Using the VCR remote, select the desired channel for the TV.
- Adjust the volume using the Bose remote.
- Adjust the Gain Control for optimum picture quality.

**NOTE: The front TV requires an adequate video signal for proper operation. The front TV does not have speakers; audio is through the home theater system only.**



**To Play a Video Tape:**

- Turn on the TV.
- Using the remote for the TV, press the S-Video or Input button until "Video Composite" displays on the TV.
- Press the TV button on the Bose remote or press the Source button on the Bose system until "TV" displays.
- Select either Roof Antenna (ANT) or Shore Cable (AUX) on the selector switch.
- Turn on the Video Selector Box. Set TV 1 to VCR.
- Turn on the VCR. Using the VCR remote, select the desired channel for the TV.
- Adjust the volume using the Bose remote.

**To Watch the Satellite (Standard Definition):**

- Turn on the TV.
- Using the RM42B remote for the TV, press the S-Video or Input button until "Video Composite" displays on the TV.
- Turn on the Satellite Receiver. Using the Hughes HRMC-6 Satellite remote, press the three following buttons in order, Sat - Action - Input. The satellite receiver is now set to Standard Definition.
- Turn on the main Power button on the DVD player. Use the RM SS450 remote to turn on the DVD player. Press the Function button until Video 1 displays on the DVD player.

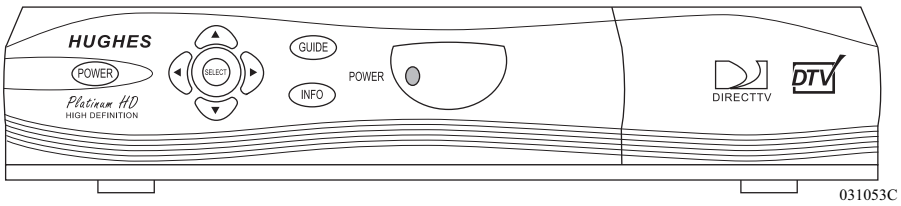


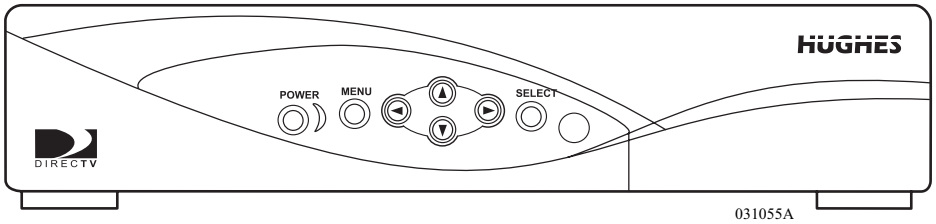


- Turn on the Video Selector Box. Set TV 1 to SAT.
- Turn on the In-Motion Satellite switch (if necessary).
- Adjust the volume using the RM SS450 remote.

**To Watch the Antenna or Satellite (High Definition):**

- Turn on the TV.
- Using the RM42B remote for the TV, press the Menu button. Scroll the cursor to Input. Press the Enter button. Scroll the cursor to Input2 YUV, press enter to select. Press Menu twice to exit. Reverse the order when viewing Standard Definition.
- Turn on the Satellite Receiver. Using the Hughes HRMC-6 Satellite remote, press the three following buttons in order, Sat - Action - Input. The satellite receiver is now set to High Definition. To return the receiver to Standard Definition, press the same three buttons. Remember to switch the TV input from Input2 YUV to Video Composite when switching back to Standard Definition.
- Press the TV button on the Bose remote or press the Source button on the Bose system until "TV" displays.
- Select either Roof Antenna (ANT), Shore Cable (AUX) on the selector switch. Select the desired channel using the Hughes HRMC-6 satellite remote.
- Adjust the volume using the Bose remote.
- Adjust the Gain Control for optimum picture quality.

**To Play a DVD:**

- Turn on the TV.
- Using the remote for the TV, press the S-Video or Input button until "Video Composite" displays on the TV.
- Turn on the main Power button on the DVD player. Use the RM SS450 remote to turn on the DVD player. Press the Function button until DVD displays on the DVD player.
- Press the Open/Close button. Place a DVD on the tray with label up. Close tray. If necessary, push Play.
- Turn on the Video Selector Box. Set TV 1 to DVD.
- Adjust the volume using the RM SS450 remote.

**NOTE: The satellite remote can be programmed for Infrared (IR) or Radio Frequency (RF). This will enable either line of sight or control from another area. The IR setting requires the remote to have a direct line of sight to the satellite receiver. The RF setting allows the remote to operate the receiver from any room.**

**NOTE: Inclement weather conditions may adversely affect the acquisition of a satellite signal. Degraded audio and video signals through the receiver will result.**

5

## *VCR (Plasma TV Only) Operation*

The VCR (Plasma TV only) component is easily recognized. It is used for audio/video operation for the TV(s). The VCR will automatically turn on when a tape is inserted. The VHS Compatibility allows recording and play back of programs on standard VHS tapes. The Audio/Video Input Jacks in the front allow for quick, easy connection of additional video equipment such as a camcorder or game console.

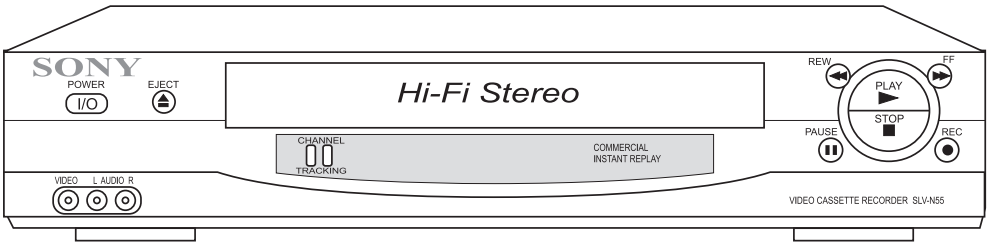


030880c

**Standard LCD TV Operation:**

**To Watch the Front Television from the roof antenna or shore cable:**

- Turn on the **Power** button on the TV tuner. Using the **Sharp GA037** remote, press the **Power** button to turn on the TV. Press the **Input** button on the top of the remote until the **Input Source menu** indicates **TV**.
- Select either **Roof Antenna (ANT)** or **Shore Cable (AUX)** on the Selector switch.
- Using the **Sharp TV** remote, select desired channel and adjust volume.
- Adjust the Gain Control for optimum picture quality.

**To Play a DVD:**

- Turn on the **Power** button on the TV tuner. Using the **Sharp GA037** remote, press the **Power** button to turn on the TV. Press the **Input** button on the top of the remote until the **Input Source menu** indicates **Input 2**.
- Turn on the **main Power** button to the AVS 200. Set **TV 1** to **DVD**.
- Turn on the **main Power** button on the DVD player. Press the **Open/Close** button. Place a DVD on the tray with label up. Close tray. If necessary, push **Play**.
- Adjust the volume using the **TV** remote.

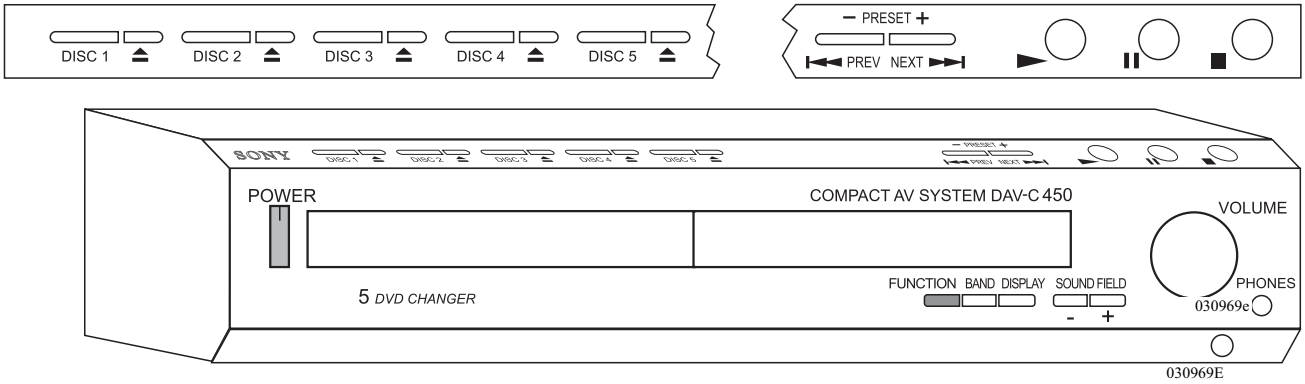

**To Watch the Satellite:**

- Turn on the **Power** button on the TV tuner. Using the **Sharp GA037** remote, press the **Power** button to turn on the TV. Press the **Input** button on the top of the remote until the **Input Source** menu indicates **Input 2**.
- Turn on the main **Power** button to the AVS 200. Set **TV 1** to **SAT**.
- Turn on the Satellite Receiver.
- Turn on the **In-Motion Satellite** control panel **(If Equipped)**.
- Adjust the volume using the **TV** remote.

**To Listen to the Home Theater:**

- Select the desired viewing option; **Antenna**, **Cable**, **Satellite** or **DSS**.
- Turn on the main **Power** button on the DVD player. Use the **RM SS450** remote to turn on the DVD player. Press the **Function** button until **Video 1** displays on the DVD player.
- Adjust the volume using the **RM SS450** remote.

**To Play a Music CD:**

- Turn on the main **Power** button on the DVD player. Use the **RM SS450** remote to turn on the DVD player. Press the **Function** button until **DVD** displays on the DVD player.
- Press the **Open/Close** button. Place a DVD on the tray with label up. Close tray. If necessary, push **Play**.
- Adjust the volume using the **RM SS450** remote.

**To View the Aladdin System:**

- Turn on the **Power** button on the TV tuner. Using the **Sharp** remote, press the **Power** button to turn on the TV. Press the **Input** button on the top of the remote until the **Input Source menu** indicates **Input 2**.
- Turn on the **main Power** button to the **AVS 200**. Set **TV 1** to **AUX**.
- Turn on the **Aladdin Reset/Storage** switch.
- Use the joystick to navigate the **Aladdin System**.

**Bedroom TV Operation:**

**To Watch the Bedroom Television from the roof antenna or shore cable:**

- Turn on the **Power** button (located behind trap door) to the TV. Using the **Panasonic** remote, press the **Power** button to turn on the TV. Press the **Input** button until **TV** displays.
- Select either **Roof Antenna (ANT)** or **Shore Cable (AUX)** on the **Selector** switch.
- Using the **Panasonic TV** remote, select desired channel and adjust volume.
- Adjust the **Gain Control** for optimum picture quality.

**To Play a Video Tape (VCR with Plasma TV option only):**

- Turn on the **Power** button (located behind trap door) to the TV. Using the **Panasonic** remote, press the **Power** button to turn on the TV. Press the **Input** button until **Video 1** displays.
- Turn on the **main Power** button to the Video Selector Box. Set **TV 1** to **VCR**.
- Insert a tape. If necessary, push **Play**.
- Adjust the volume using the TV remote.

**To Play a DVD:**

- Turn on the **Power** button (located behind trap door) to the TV. Using the **Panasonic** remote, press the **Power** button to turn on the TV. Press the **Input** button until **Video 1** displays.
- Turn on the **main Power** button to the **AVS 200**. Set TV 1 to **DVD**.
- Turn on the **main Power** button on the DVD player. Press the **Open/Close** button. Place a DVD on the tray with label up. Close tray. If necessary, push **Play**.
- Adjust the volume using the **TV** remote.

**To Watch the Satellite:**

- Turn on the **Power** button (located behind trap door) to the TV. Using the **Panasonic** remote, press the **Power** button to turn on the TV. Press the **Input** button until **Video 1** displays.
- Turn on the **main Power** button to the AVS 200. Set **TV 1** to **SAT**.
- Turn on the Satellite Receiver.
- Turn on the **In-Motion Satellite** control panel. (If Equipped)
- Adjust the volume using the **TV** remote.

**To View the Aladdin System:**

- Turn on the **Power** button (located behind trap door) to the TV. Using the **Panasonic** remote, press the **Power** button to turn on the TV. Press the **Input** button until **Video 1** displays.
- Turn on the **main Power** button to the AVS 200. Set **TV 2** to **AUX**.
- Turn on the **Aladdin Reset/Storage** switch.
- Use the joystick to navigate the **Aladdin System**.

**Bedroom TV Cabinet Speakers:**

The bedroom TV has speakers, or if desired, the sound can be played through the bedroom stereo cabinet speakers.

- Set **TV/Radio** switch to TV.
- Turn on the **RCA SA-155** amplifier. Set component select knob to **Tuner**. Adjust amplifier volume.

**Plasma TV Operation (Optional):**

To Lower or Raise the Optional Plasma Television:

1. Turn the ignition switch off.
2. Turn on the interior house power using the battery cut-off switch.
3. Hook to shore power, start the generator or turn on the inverter.
4. Make everything is clear of the mechanism. Press and hold the **Plasma** switch to lower or raise the TV. Movement will stop when the switch is released.

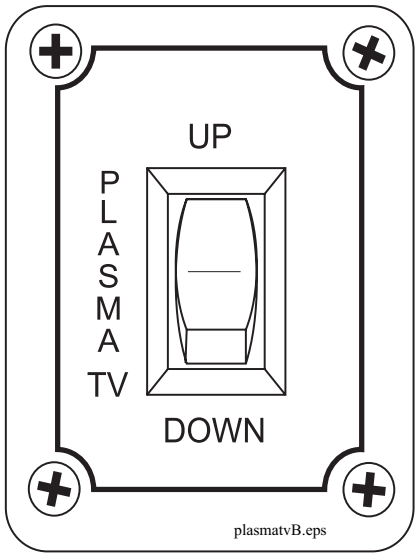


**NOTE: These operating instructions are for the front Plasma TV. For bedroom TV operation, use the TV/Video button on the bedroom TV remote to select Input 1 when viewing a tape, satellite or DVD.**

**INFORMATION: Refer to each component manual for in-depth operating instructions.**

**To Watch the Front Television from Roof Antenna or Shore Cable:**

- Turn on the TV.
- Using the remote for the TV, press the **S/Video** button until "**Video Composite**" displays on the TV.
- Turn on the **main Power** button on the DVD player. Use the **RM SS450** remote to turn on the DVD player. Press the **Function** button until **Audio 1** displays on the DVD player.
- Select either **Roof Antenna (ANT)** or **Shore Cable (AUX)** on the Selector switch.
- Turn on the **main Power** button to the Video Selector Box. Set **TV 1** to **VCR**.
- Turn on the VCR. Using the **VCR** remote, select the desired channel.
- Adjust the volume using the **RM SS450** remote.
- Adjust the **Gain Control** for optimum picture quality.

**CAUTION: Turn off Plasma TV before storing.**

**NOTE: The front TV requires an adequate video signal for proper operation. The front TV does not have speakers; audio is through the home theater system only.**

**To Play a Video Tape:**

- Turn on the TV.
- Using the remote for the TV, press the **S-Video** or **Input** button until "**Video Composite**" displays on the TV.
- Turn on the **main Power** button on the DVD player. Use the **RM SS450** remote to turn on the DVD player. Press the **Function** button until **Video 1** displays on the DVD player.
- Turn on the **main Power** button to the Video Selector Box. Set **TV 1** to **VCR**.
- Insert a tape. If necessary, push **Play**.
- Adjust the volume using the **RM SS450** remote.

**To Watch the Satellite:**

- Turn on the TV.
- Using the remote for the TV, press the **S-Video** or **Input** button until "**Video Composite**" displays on the TV.
- Turn on the **main Power** button on the DVD player. Use the **RM SS450** remote to turn on the DVD player. Press the **Function** button until **Video 1** displays on the DVD player.
- Turn on the Video Selector Box. Set **TV 1** to **SAT**.
- Turn on the Satellite Receiver.
- Turn on the In-Motion Satellite switch.
- Adjust the volume using the **RM SS450** remote.

**To Play a DVD:**

- Turn on the TV.
- Using the remote for the TV, press the **S-Video** or **Input** button until "**Video Composite**" displays on the TV.
- Turn on the **main Power** button on the DVD player. Use the **RM SS450** remote to turn on the DVD player. Press the **Function** button until **DVD** displays on the DVD player.
- Press the **Open/Close** button. Place a DVD on the tray with label up. Close tray. If necessary, push **Play**.
- Turn on the Video Selector Box. Set **TV 1** to **DVD**.
- Adjust the volume using the **RM SS450** remote.

**NOTE: The satellite remote can be programmed for Infrared (IR) or Radio Frequency (RF). This will enable either line of sight or control from another area. The IR setting requires the remote to have a direct line of sight to the satellite receiver. The RF setting allows the remote to operate the receiver from any room.**

**NOTE: Inclement weather conditions may adversely affect the acquisition of a satellite signal. Degraded audio and video signals through the receiver will result.**

**Hooking Up Auxiliary Equipment:**

Additional equipment can be hooked up to the Front LCD tuner. Located behind the access door are auxiliary RCA jacks (Input 4) and RGB (PC) port.

**INFORMATION: Before hooking up additional equipment, refer to the equipment manufacture manuals for cautions and instructions.**

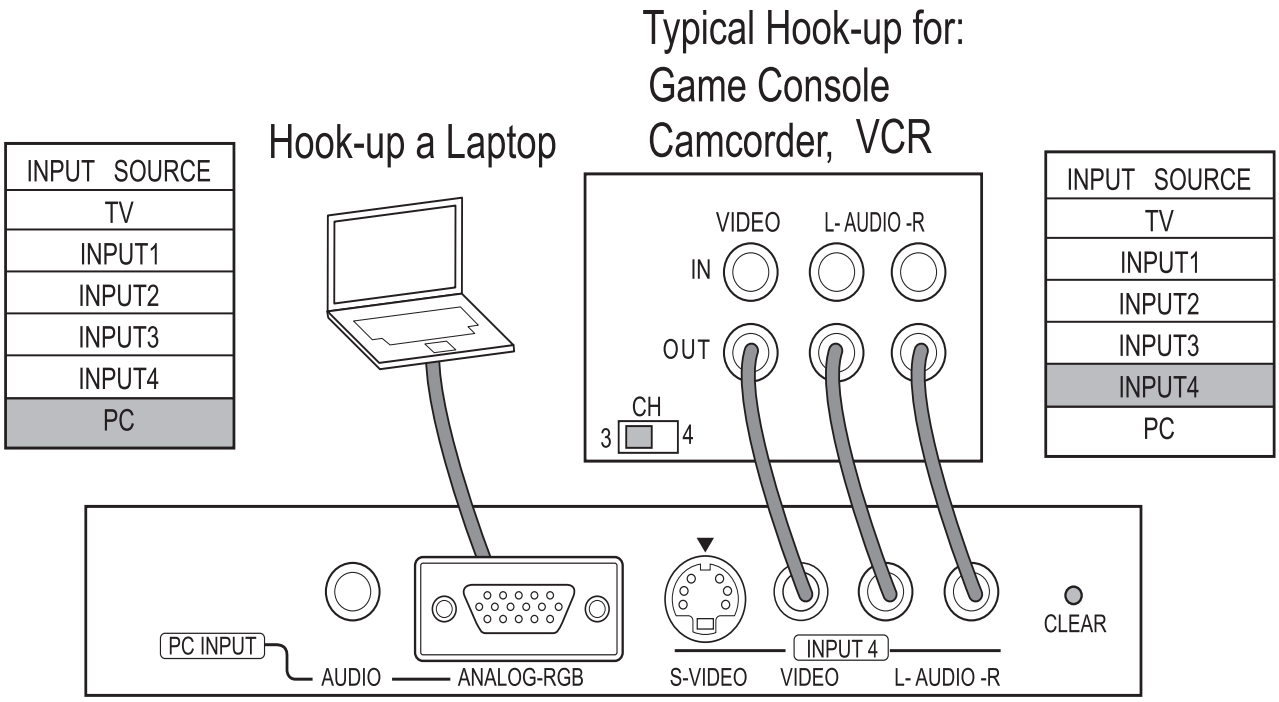


Two universal remotes can be used to operate the home entertainment system.

## UNIVERSAL REMOTES

The MX 700 controls most of the home theater components. The MX200 is a companion remote for bedroom TV operation. The Main menu on the MX 700 displays each of the home entertainment system components. Pressing the button adjacent to a main menu item will bring up a sub-menu for that component. When the sub-menu appears, the remote is ready to control the selected component, press On to turn on that component. If the desired action for that component is not on page 1 of the sub-menu, press the Page button to bring up subsequent sub-menus for that component. Press the Main button to return to the main menu. Some component items, such as the bedroom TV, have a Main power button on the component that must be on for that component to operate.

**NOTE: For ease of using the MX 700 remote to operate the home entertainment system, it is recommended to initially operate each component manually in order to become familiar with how each component operates and how components interface with each other.**

**NOTE: The main power button on the AVS 200 and the DVD player must be on.**

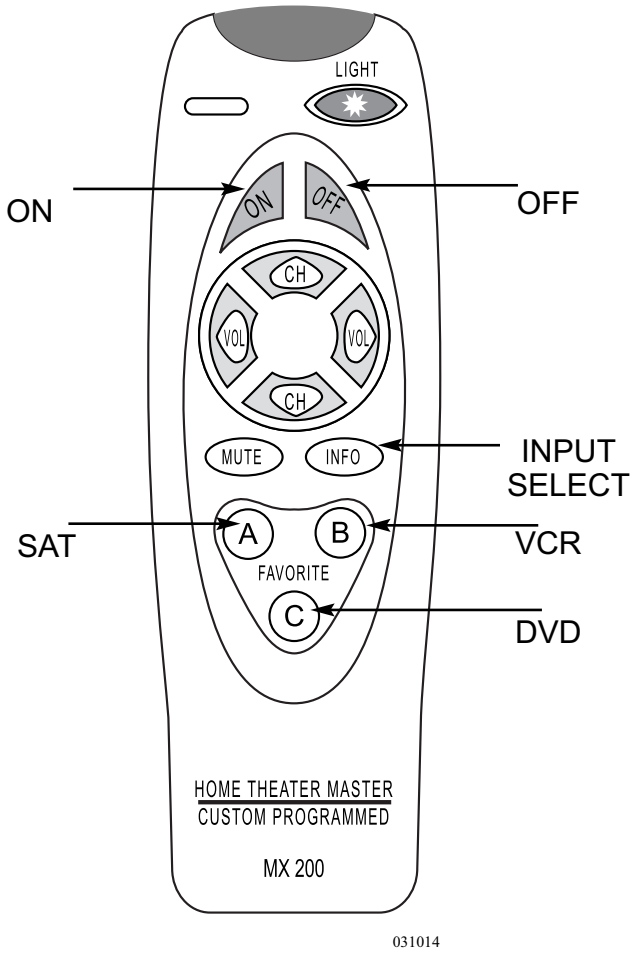

**Example: To Watch Front LCD TV (Standard TV) from Antenna.**

1. Turn on the interior house power using the battery cut-off switch.
2. Hook to shore power, start the generator or turn on the inverter.
3. From the Main menu, press the button adjacent to FT TV. A sub-menu will appear with a heading of FT TV. Press the On button. This will turn on the TV.
4. Use the channel Up/Down to select channels.
5. Adjust the gain control for best picture quality. Adjust volume to desired level.
6. From the FT TV menu, press the button next to DVD. This will automatically switch the AVS 200 to DVD and turn on the DVD player. The menu for the DVD will appear on the MX 700.

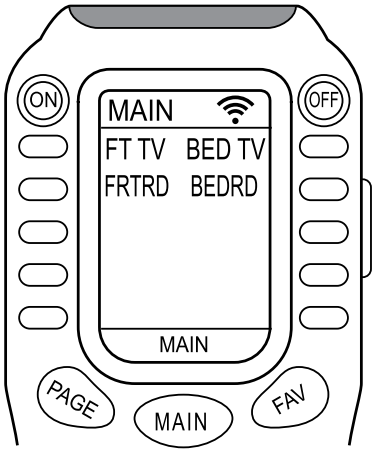


031013m

**Example: To Watch Optional Front Plasma TV from Antenna.**

1. To Lower the Optional Plasma Television:
   a. Turn the ignition switch off.
   b. Turn on the interior house power using the battery cut-off switch.
   c. Hook to shore power, start the generator or turn on the inverter.
   d. Clear the area surrounding the mechanism. Press and hold the **Plasma** switch to lower or raise the TV. Movement will stop when the switch is released.
2. From the **Main** menu, press the button adjacent to FT TV. A sub-menu will appear with a heading of **FT TV**. Press the **On** button. This will turn on the TV.
3. Press the button next to DVD. The menu will change to **DVD**. Press the **On** button to turn on the DVD.
4. Press the **Main** button to return to the main menu. Press the button next to FT TV.
5. Press the button next to VCR. The menu will change to **VCR**. It may be necessary to press the **On** button to turn on the VCR. Use the channel **Up/Down** to select desired channel. Adjust volume to desired level.
6. Adjust the Gain Control for best picture quality. Adjust volume to desired level.
7. From the **FT TV** menu, press the button next to SAT. This will automatically switch the AVS 200 to **Satellite**. The menu for the Satellite will appear on the MX 700. Press the **On** button to turn on the satellite receiver.

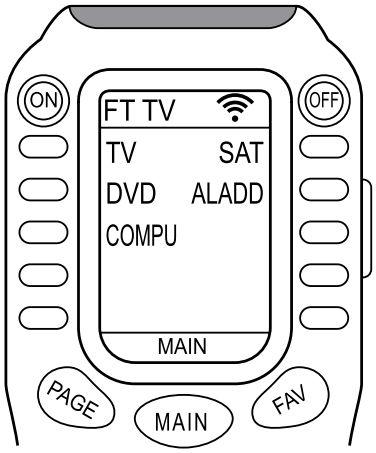


031013N

# ~ NOTES ~

# Water Systems
## Section 6


**WATER SYSTEMS - INTRODUCTION .....311**
**ALADDIN™ SYSTEM .....311**
Measurements & Calibration (Water Tanks) .....311
**WATER .....313**
Fresh Fill .....313
City Water Hook-Up .....313
**WATER HOSE REEL .....314**
**WATER TANK .....315**
Fresh Gravity Fill .....315
**PLUMBING MANIFOLD .....315**
**WATER PUMP .....316**
Water Pump Troubleshooting .....317
**PRESSURE ACCUMULATOR TANK .....318**
**WATER FILTERS .....318**
Galley Filter .....320
**WATER SYSTEMS .....321**
Troubleshooting .....321
Disinfecting Fresh Water .....321
**FAUCETS .....322**
**SOAP DISPENSER - LIQUID .....323**
**WASTE WATER SYSTEMS .....323**
Proper Waste Disposal .....323
What Not to Put in Waste Holding Tanks .....323
Waste Drain & Sewage Tanks .....324
Waste Drain Hose .....325
What to Put in Holding Tanks - Black Tank .....326
What to Put in Holding Tanks - Grey Tank .....326
Black Tank Flush .....326
**TOILET .....328**
Cleaning & Maintenance .....330
Drain Traps & Auto Vents .....330
**COLD WEATHER CONDITIONS .....331**
Cold Weather Storage .....331
**WINTERIZATION .....331**
Using Air Pressure .....332
Using Nontoxic Antifreeze .....334
De-Winterizing .....336
**TANK CAPACITIES - CHART .....336**
**SERVICE CENTER .....337**
**WATER PUMP DIAGRAM .....338**
**WATER SYSTEMS DIAGRAM .....339**

## WATER SYSTEMS - INTRODUCTION

This section contains information about the operation and care of the various water system equipment found in the motorhome. The motorhome is equipped with two separate water systems. Optional water equipment will also be discussed, so not all information may be applicable to the motorhome. More detailed information with **CAUTION** or **WARNING** instructions for the various equipment, other than what is found in this section, can be found in the manufacturer's manual in the owner information box.

It is hard to imagine how much water is used by the average person everyday. Newcomers to a self-contained motorhome soon discover water does not last very long unless consumption is drastically reduced. For example, less water can be used for showering if the shower is turned off while soaping down, then turned back on to rinse. This way a good shower uses a couple gallons of water or less. There is plenty of water to meet personal needs once habits are adjusted.

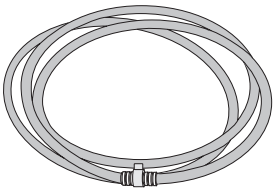

040400

*Screw the ends of the hose together before storage to prevent leakage and to prevent dust and insects from entering hose.*

**Fresh Water System:**

The fresh water system consists of the fresh water tank, water pump, gravity fill connection, water filter(s) and a water hose for potable water use only. Proper care of the hose is necessary. After each use, drain the water hose and wind it up neatly and fasten the two ends together to keep out foreign objects. If the motorhome is equipped with the optional hose reel, follow the same procedure, rolling the hose up onto the hose reel and attaching the regulator and plug to keep out insects and debris.

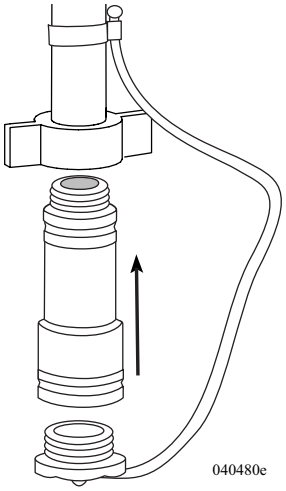

040480e

*Water Pressure Regulator*

**Waste Water System:**

The waste water system consists of a waste holding tank (grey water), a sewage holding tank (black water), flush system, toilet and drains.

**WARNING: Water is electrically conductive. Do not use any electrically powered item or electrical outlet that may be exposed to a water source, such use can result in a serious shock resulting in injury or death.**

## ALADDIN™ SYSTEM *- Measurements & Calibration (Water Tanks)*

The Aladdin™ system is used to monitor various systems including holding tank capacity. The Aladdin™ storage/reset switch will have to be on to display the Main menu screen. Move the joystick until the cursor is next to **Coach Tank/Misc Status**. Move the joystick right to display tank capacities.

**The Coach Tank/Misc Status screen displays:**

- Fresh, grey and black tank percentage full and corresponding gallons.
- LP-Gas tank percentage of full.
- Basement and outside temperatures.

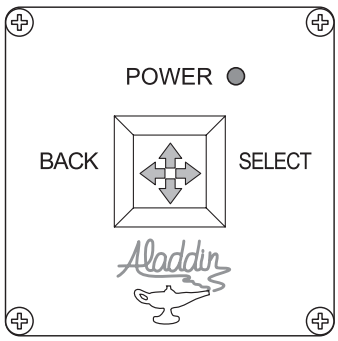


080377d

**Calibration:**

Fresh, grey and black tank percentages are determined by the tank sensors. The tank sensors measure the height of the water in the tank. Gallons entered are equally divided by the Aladdin™ system between empty and full calibration. (Refer to the Aladdin™ system instructions *System Options/Set Tank Capacities.)*

**NOTE: Calibration should only need to be done when the motorhome is new or if a component is replaced in the system.**

```
MAIN MENU

  SELECT VIDEO SOURCE
  ENGINE/TRANS STATUS
  COACH ELECTRICAL STATUS
  COACH TANK/MISC STATUS
  TRIP METER SELECTION
  TIME/ALARM FUNCTIONS
> SYSTEM OPTIONS
  POWER DOWN VCM
```

020195b

First, access the **Main Menu**, scroll down to the **Systems Options** screen.

**The Systems Options screen displays:**

- **Set Tank Capacities** = Screen used to program the number of gallons for each tank.
- **System Configuration** = Should only be used by a technician initializing or troubleshooting the system.
- **Set Calibration** = Screen used to calibrate tank sensors by setting with the tank Empty and again with the tank Full. Requires access code 1218.

```
SYSTEM OPTIONS

  SELECT VIDEO SOURCE
> SET TANK CAPACITIES
  SYSTEM CONFIGURATION
  SET CALIBRATION
```

020214

**Set Tank Capacities Screen:**

The purpose of setting the tank capacities is to program the Aladdin™ system with the fuel tank and holding tank capacities in gallons. The Aladdin system uses the fuel tank capacity information to estimate fuel remaining calculations. The capacities for the fuel tank, fresh, grey and black holding tanks are set here.

Move the joystick to the **right** to enter **Set Tank Capacities**. Move the joystick **Up** or **Down** to select the tank. Move the joystick **right** to enter. Move the joystick **Up** or **Down** to change the **Hundreds** value. Move the joystick **right** from the hundreds digit to set the rest.

```
SET TANK CAPACITIES

> FUEL TANK   =  148 GAL
  FRESH TANK  =  100 GAL
  GRAY TANK   =   80 GAL
  BLACK TANK  =   80 GAL
```

020216b

```
SET SYSTEM CALIBRATION

>  CAUTION:  SEE MANUAL
   EMPTY FRESH TANK  =   14
          GRAY TANK  =   15
          BLACK TANK =   15
   FULL FRESH TANK   =   89
          GRAY TANK  =  174
          BLACK TANK =  174
```

020218

**Set Calibration Screen:**

The sensors must be calibrated individually with holding tanks empty and again with the tanks full, the order does not matter: empty-full or full-empty, as long as both are done.

For instance, when calibrating the grey tank when it is empty, scroll to **Empty Gray Tank**. Move the joystick to the **right** to set the tank capacity. The new value will blink until confirmed by the tank level interface module.

Next fill the tank and scroll cursor to **Full Gray Tank**. Move the joystick to the **right** to calibrate the full setting. Perform this procedure for the desired tank. Once calibrated the system retains the information.

| COACH TANK/MISC STATUS | | |
|---|---|---|
| FRESH TANK | PCT | XXXXXXX |
| | GAL | XXXXXXX |
| GRAY TANK | PCT | XXXXXXX |
| | GAL | XXXXXXX |
| BLACK TANK | PCT | XXXXXXX |
| | GAL | XXXXXXX |
| LP TANK | PCT | XXXXXXX |
| BASEMENT TEMP | F | XXXXXXX |
| OUTSIDE TEMP | F | XXXXXXX |

020199

**NOTE: The sensors measure the tank in millimeters. Incorrect tank capacities will not damage anything, but will provide incorrect readings. Calibration settings are memorized regardless if the system loses power.**

**NOTE: The Aladdin™ system must be in Normal mode to allow the Tank Level sensors to memorize the calibration settings.**

## WATER - *Fresh Fill*

- Connect a potable water hose to the city/fresh water hook-up located in the service center on the roadside of the motorhome.
- Turn the city water/tank fill valve to the **Fresh Water Fill - Open** position.
- Turn on the water supply.
- The water pump should be off.
- The water tank is full when water comes out the tank overflow pipe located on the curbside of the motorhome. Shut the water supply off as soon as possible.

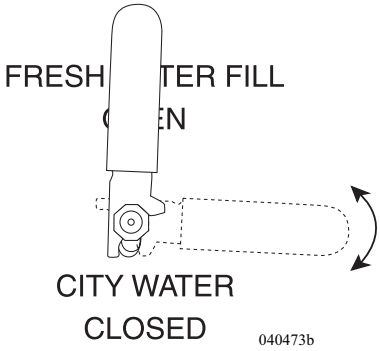


As shown for Fresh Tank Fill.

**NOTE: When connecting the motorhome to fresh water be sure to use a hose manufactured and labeled for potable water to ensure that the hose will not flavor the water. Monitor the tank filling process at all times. Use the monitor panel as a tank fill guide.**

## *City Water Hook-up*

- Connect a potable water hose to the City Water Hook-up located in service center on the roadside of motorhome.
- Turn the city water/tank fill valve to the **City Water -Closed** position.
- Turn on the water supply.
- The water pump can either be off or on. It will not affect the water pump to leave it on.

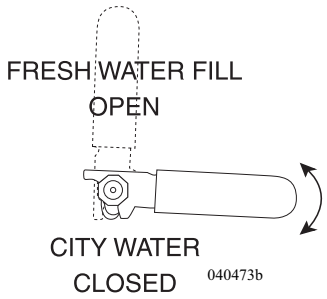


As shown for City Water.

- The City Water Hook-up in the service center has a built in pressure regulator and one way check valve. The pressure regulator limits the water pressure to approximately 45 PSI.

**CAUTION: Some outside water sources develop high water pressure, particularly in mountainous regions. High water pressure is anything over 55 psi (pounds per square inch). Excessive water pressure may cause leaks in water lines and/or damage the water heater. (An additional pressure regulator can be connected to the city water faucet to regulate the pressure to the potable water hose.) Excess pressure on a hot day can cause the water hose to swell and burst.**

## WATER HOSE REEL

The convenience of the water hose reel eliminates the need to store a potable water hose in the bay. Use the hose reel for city water hook-up or to fill the fresh water tank. The reel is equipped with a 35 foot hose and a 12 Volt motor that will rewind the hose after use. The water reel is located in the roadside bay.

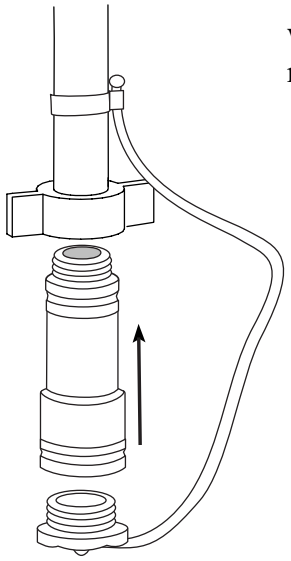


**To Use the Hose Reel:**

- Remove hose plug and install a water pressure regulator to the water hose.
- Connect the water hose to a City Water hook-up.
- Located next to the Water Hose Reel is the City Water/Tank Fill valve. Select either City Water or Fresh Tank Fill.
- Turn on the water supply.
- If used for filling the water tank, water will flow out of the overflow underneath the motorhome when the tank is full. Shut the water supply off as soon as possible.

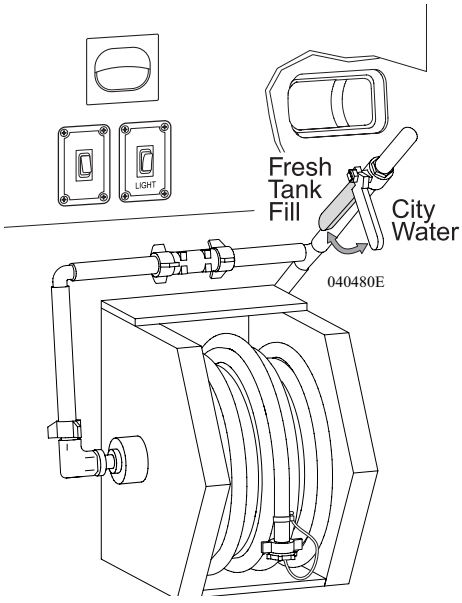


**To Retract the Hose Reel:**

- Disconnect the water hose from the faucet. Do not leave water regulator attached to faucet.
- Press the retract switch and guide the hose onto the reel.
- Install plug in hose when not in use.

**Maintenance:**

When using the hose, look for kinks. Periodically fully extend the hose. Straighten the hose on the ground. It is important that the water hose remains clean.

## WATER TANK - *Fresh Gravity Fill*

The gravity fill inlet allows fluids to be added directly into the fresh water tank. When dry camping, water can be poured directly from a container into the fresh water tank. The gravity fill inlet can be used to pour disinfecting solution into the fresh water tank or when using potable RV antifreeze to winterize the fresh water system. Use only potable water sources, solutions and delivery systems when using the gravity fill inlet.

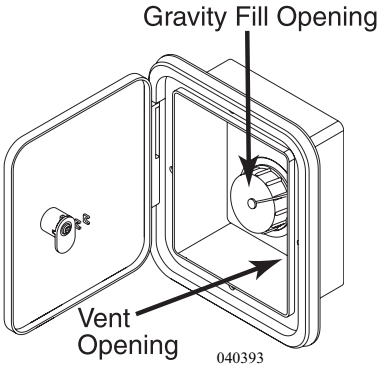


**Filling the Tank:**

1. Unscrew fill cap taking care to keep cap and inlet clean.
2. Insert potable water hose into inlet.
3. Fill tank until water overflows from inlet.

**NOTE: When filling tank, do not leave hose unattended.**

## PLUMBING MANIFOLD

The water manifold system separates the main hot and cold lines. The main hot and cold inputs are divided into the individual branch lines. Water flows unrestricted with no hidden fittings located behind walls.

Each faucet or appliance water line may be turned off individually. The hot water valves are located on the left and the cold water valves are on the right. Use the key provided to turn on or off any water line. When key is horizontal the water line is open. Turning the key to the vertical position shuts that water line off. Each water line is labeled for easy reference. Snap the key into the storage position after use.

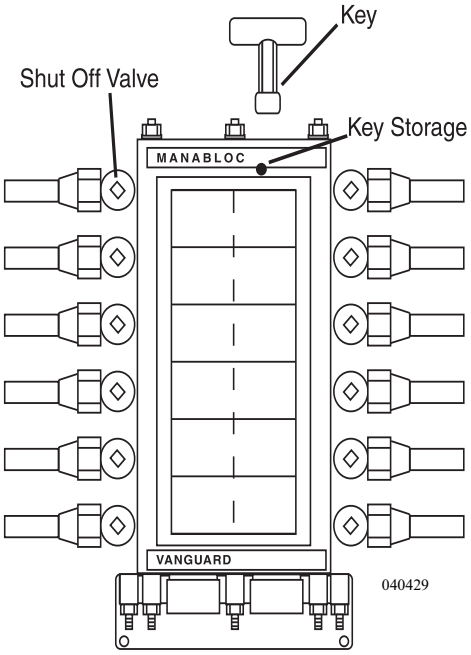


6

## WATER PUMP

The water pump pressurizes the fresh water system when not connected to city water. The water pump is totally automatic and self-priming, operating on demand as water is used. The water pump is located in a storage compartment of the motorhome.

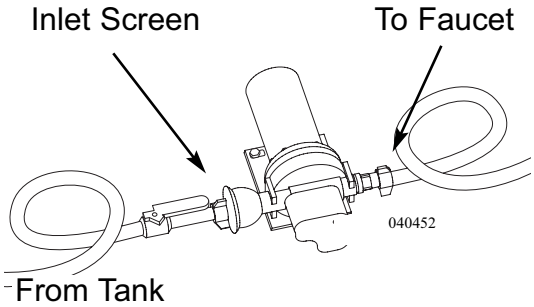


**WARNING: Before leaving the motorhome for extended periods of time (i.e. overnight or longer) be sure that the city water and all water pumps have been turned off. Damage from neglect will be the responsibility of the owner, not the manufacturer.**

**Latching Controller:**

The circuitry of a latching controller allows multiple switch locations to operate the water pump. Pressing one of the water pump switches provides a momentary ground signal to the latching controller, turning the water pump on or off from any location. An indicator lamp at each water pump switch illuminates when the water pump is on.

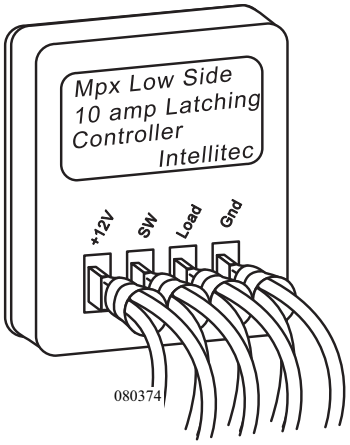


**NOTE: The latching controller is located next to the water pump.**

**The water pump can be operated from the following locations:**

- Bathroom
- Galley
- Service Center

**To turn the water pump on or off:**

- Momentarily press the water pump switch. The indicator lamp will illuminate when the water pump is turned on.

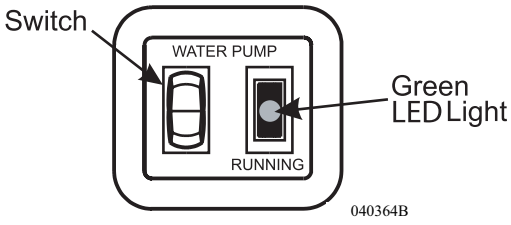


**CAUTION: Do not continue water pump operation if the fresh water holding tank is empty. Damage to the water pump or electrical supply system may result.**

**Use the following procedure to operate the water pump after unhooking from the city water supply or after storage:**

- Close all drain valves and low point drains.
- Fill the fresh water tank.
- Open the hot and cold water valves of each faucet.
- Turn the water pump on. Wait for the water lines and the hot water tank to fill.
- Close each faucet when it delivers a steady stream of water (cold water faucets first).

Vibration induced by road conditions can cause the plumbing or pump hardware to loosen. Check the water pump system for components that are loose. Many symptoms can be resolved by tightening the hardware. Check the following items:

**The water pump will not start or blows the fuse:**
- Check the electrical connections, fuse or breaker, main switch and ground connection.
- Check the electrical connections at the latching controller.
- Is voltage present at the pressure switch on the pump? If voltage is present the pressure switch may be faulty. As a test, temporarily bypass the pressure switch.
- Is the latching controller grounding the water pump?
- Check the charging system for correct voltage and good ground.
- Check for an open or grounded circuit or motor.
- Check for a seized or locked diaphragm assembly (water frozen).

**The water pump will not prime or sputters (No discharge/motor runs):**
- Is the pump inlet strainer clogged with debris?
- Is there water in the tank or has air collected in the water heater?
- Is the inlet tubing and plumbing sucking in air at plumbing connections (vacuum leak)?
- Check for proper voltage with the pump operating.
- Look for debris in the pump inlet/outlet valves or dry/swollen valves.
- Check the pump housing for cracks or loose drive assembly screws.

**The water pump will not shut-off or continues to run when the faucet is closed:**
- Check to see if the fresh water/tank fill valve is completely closed.
- Check the output (pressure) side plumbing for leaks and inspect for a leaky toilet or valves.
- Look for a loose drive assembly or pump head screws.
- Are the valves on the pump or the internal check valve held open by debris or is the rubber swollen?

**The water pump is noisy or rough in operation:**
- Check for plumbing that may have vibrated loose.
- Does the mounting surface multiply noise (flexible)?
- Check for mounting feet that are loose or compressed too tight.
- Look for loose pump head to motor screws.

**The water pump is rapid cycling:**
- Look for restrictive water flow in the faucets or shower heads.

## PRESSURE ACCUMULATOR TANK

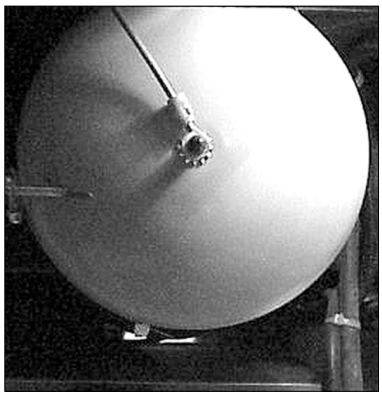

accumulator tank.eps
*Remove tank valve cap to check air pressure.*

The pressure accumulator tank mounts in the water bay near the water pump. The pre-charge pressure in the accumulator tank should be checked monthly.

**The Accumulator Features:**
1. Smooth flow from the faucets.
2. Reduced water pump cycling.
3. A pre-charged air cushion.
4. Elimination of pulsation and water hammer.
5. Water pressure at faucets.

The accumulator tank has a tire valve that is used to pre-charge the tank with air pressure. The pre-charge pressure must not exceed the water pump cut-in pressure, the pressure at which the pump restarts. The water pump has a cut-in pressure of 40 psi. The pre-charge pressure of the accumulator tank is 18 to 22 psi. To check the air pressure in the accumulator tank the water pump and city water will need to be off. Open a faucet to relieve the water pressure. Check the accumulator tank pressure monthly using a tire air pressure gauge (one that reads low air pressure). Use a hand-operated pump to add air pressure to the accumulator tank. The amount of airflow and high-pressure from a compressed air system can quickly overcharge the tank causing the internal bladder or tank to rupture.

## WATER FILTERS

The 2-stage filtration system will filter up to 1,350 gallons (approx. 6 months of water) between filter changes. The 2-stage filtration system uses the following filters:

- **First Stage - Five Micron Sediment Filter:** For reduction of suspended solids, dirt and rust. Life expectancy varies with incoming water condition. Recommended change interval of six months to one year depending on usage and incoming water quality.
- **Second Stage - Five Micron Carbon Block Filter To:** Improve water quality by reducing objectionable organic chemicals, chlorine, tastes and odors. Recommended change interval of six months to one year depending on usage and incoming water quality.

| | |
|---|---|
| First Stage | 104017 Segment Filter |
| Second Stage | 101010 Carbon Block Filter |
| RV Waterguard | 2PR WP500342 |

Prior to disinfecting the water system with chlorine bleach solution, the filter elements will need to be removed and the filter bowls reassembled, without the elements. To remove or change the filter elements use the following procedure.

*Water Filter Removal Wrench.*

**Removal:**
- Turn off the water supply and the water pump.
- Open the faucet to bleed off pressure.
- Unscrew the filter bowl from the filter head.
- Remove the old element and empty any remaining water in the bowl.

**Installation:**
- Place the elements in the bowls, observing primary and secondary filter locations.
- Screw the bowls onto the filter heads, hand tight.
- Turn on the water pump or city water.
- Open the outside faucet and purge air from the filter assembly.
- Check for leaks.

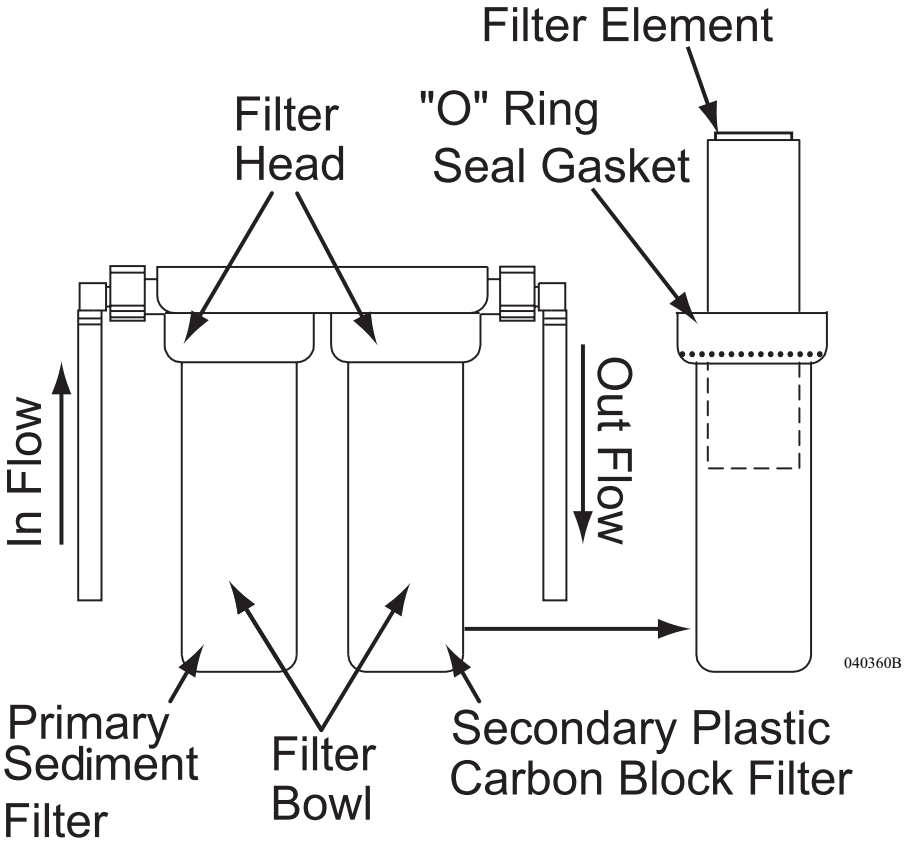

## Galley Filter

The ADC filter, located under the galley sink, filters the water supply for the drinking water tap or optional Instahot to 1/2 micron. For winterization purposes, the filter head may have been installed with the diverter cap in place. In this case remove the diverter cap and store for winterization. Install the cartridge by following instructions on the cartridge.

The internal filter is designed to remove particles and organisms as small as ½ micron.* As water passes through the water filter, impurities are trapped in the pores of the micro-pure coating restricting the flow of water. When the flow of water is restricted the cartridge should be replaced.

The life of the filter will vary depending on the purity of the incoming water and the quantity used. If the cartridge is not changed, the flow will eventually stop entirely. Even if the flow of water is not reduced, change the cartridge at least once a year for reliable filter performance.

***One micron is one millionth of one meter.**

**NOTE: Change the filter at least once a year.**

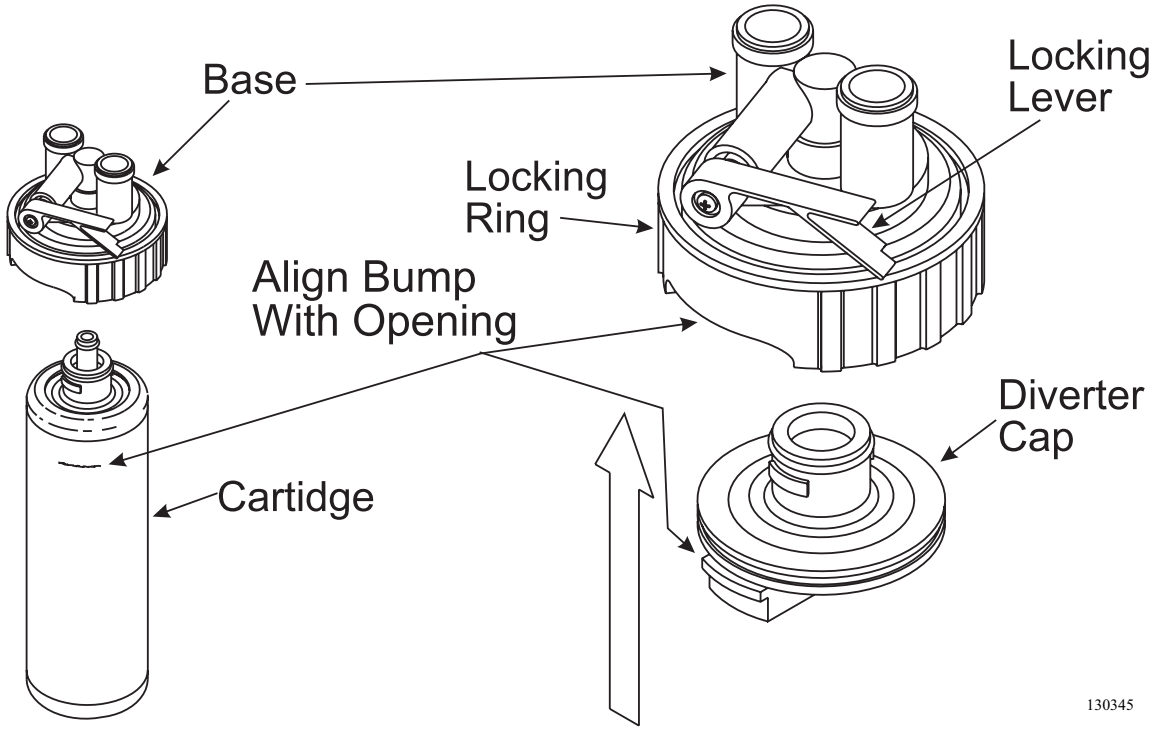

## WATER SYSTEMS
### *Troubleshooting*

Water system problems and leaks usually fall into two categories: system problems and problems caused by improper use or lack of attention. These problems usually stem from improper winterizing, poor maintenance, road vibration and campsite water pressure variations.

Check all plumbing connections for leaks at least once a year. If the water pump runs when a faucet is not open, check for a water leak. Be sure the tank drain valves are closed. If the system continues to leak take the motorhome to an authorized dealer for service.

### *Disinfecting Fresh Water*

Disinfecting the water system with chlorine bleach (superchlorination) protects the drinking water from bacterial or viral contamination that may come from any common water source.

**Disinfect the Water System:**
- If the motorhome is new.
- If the motorhome has not been used in a long time.
- Every three months.

**Use the following procedures to disinfect the water system.**
- Remove any water filter elements that may be installed and install diverter caps or bypass hoses as needed.
- Prepare a chlorine bleach solution using one gallon water and ¼ cup of chlorine bleach. Use 1 gallon of solution for every 15 gallons of tank capacity. For example: Add 2 2/3 gallons solution to a 40 gallon tank. Add 4 2/3 gallons solution to a 70 gallon tank. Add 6 2/3 gallons to 100 gallon tank. This mixture puts a 50 PPM (parts per million) disinfecting solution in the water system. This concentration will act as a quick-kill dosage for harmful bacteria, viruses and slime-forming organisms. Concentrations higher than 50 PPM may damage the water lines and/or tanks.
- Another method of calculating the amount of chlorine bleach to be used would be to multiply the number of gallons of water in the tank by 0.13. The result would be the number of ounces of chlorine needed to be introduced into the fresh water tank.
- Drain the fresh water tank. Close the drain and prepare to introduce the solution into the fresh water tank. The method of introduction is up to the owner.
- Turn on the water pump in the motorhome.
- Open each faucet and run the water until you smell a distinct chlorine bleach odor.

- Turn off all faucets allowing the system to stand for four hours.
- Drain the fresh water tank of the mixed solution.
- Fill the water tank with fresh water. Flush hot and cold lines thoroughly with fresh water. Repeat this process until the chlorine bleach smell is no longer detectable in the water system.
- Install new water filters.

## FAUCETS

The kitchen faucet head has a flexible hose allowing the faucet head to be removed from the base. O-rings seal the faucet head to the base preventing water from dripping into the cabinet. Push the slide bar to select either stream or spray.

Should the flow of water reduce, the filter screen in the faucet head may be clogged. Fresh water sources will vary by location. Build up of lime deposits or debris on the faucet screens will restrict or plug the flow of water coming from the faucets. All faucet screens should be checked and cleaned every two weeks of use.

- The kitchen faucet has a screen in the handle. Unscrew the hose from the faucet head to clean the screen.
- Vanity faucet screens are normally located on the outlet side of the faucet and held in place with a threaded collar. Remove screen from faucet.
- Clean screen using a small soft brush and a de-liming solution if necessary.
- Install screen and check water flow.

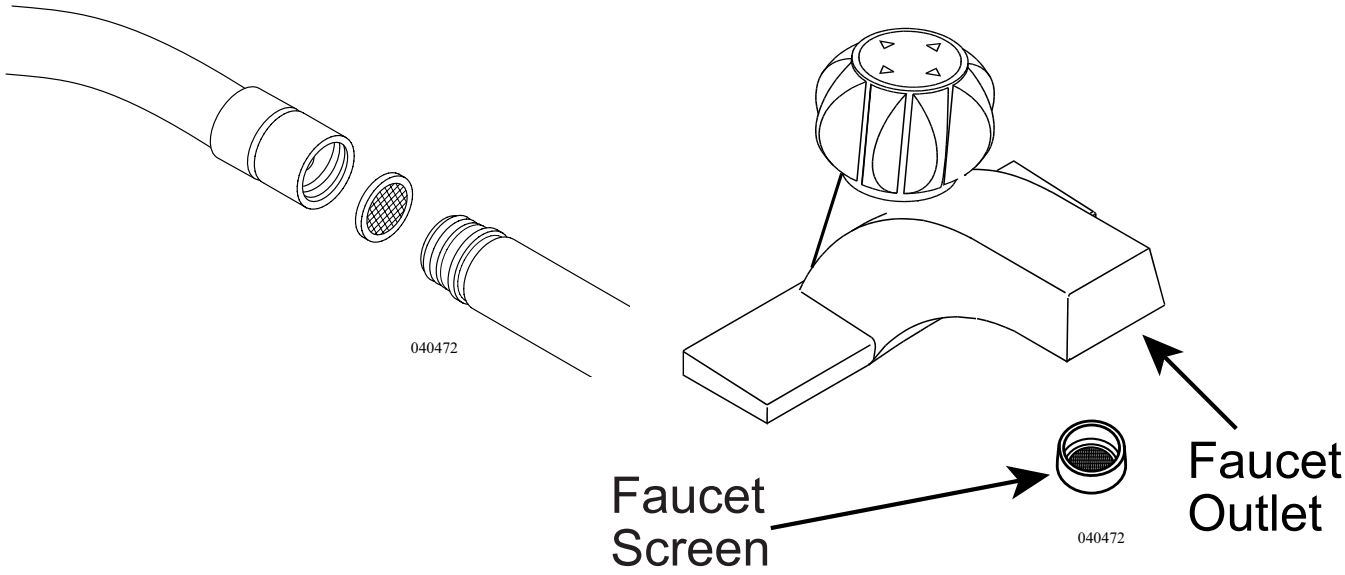

## SOAP DISPENSER - LIQUID

The liquid soap/lotion dispenser can be used with any type of liquid soap or lotion. The liner of the bottle will not corrode or discolor the contents of the dispenser. To clean, use a soft cloth and blot dry. Do not use harsh abrasive cleansers or polishes, this can damage the finish on the dispenser.

*Liquid Soap Dispenser and Funnel* funnelfaucet01.tif

6

## WASTE WATER - SYSTEMS

### *Proper Waste Disposal*

Most State Parks have strict regulations about discharging wastes except into authorized disposal systems. Dumping raw sewage from toilet holding tanks, except at authorized dumping stations, is universally prohibited.

Most National, State and private parks have either a central dump facility or campsite hook-up for sewage. Many of the modern rest areas along the interstate now have dump stations available. You will find a list of dumping stations from coast to coast in Woodall's Campground Directory, Trailer Life's RV Campgrounds and Services Directory, Rand McNally's Campground and Trailer Park Guide, Good Sam Park Director (Good Sam Club), and other similar publications. Some major oil companies offer dump facilities at selected stations. Usually, very few inconveniences are experienced when holding tank waste is properly and legally disposed of.

### *What Not to Put in Waste Holding Tanks*

- Do not use strong or full strength detergents to deodorize and disinfect. Use odor control chemicals made especially for holding tanks.
- Do not put automotive antifreeze, ammonia, alcohol or acetone in holding tanks. Some chemicals will dissolve plastic.
- Do not put large table scraps in the tanks. They could be stuck in or damage the valve seals.

- Do not flush facial tissues. They are treated chemically to strengthen them and will not dissolve like toilet paper. Special holding tank tissues are available at most RV supply stores.
- Household tissues are thicker, softer and stronger than a rapidly dissolving tissue. White toilet paper dissolves faster than colored papers. To test tissue dissolving ability, immerse one tissue square into a jar of water. Shake the jar five times to determine if the tissue disintegrates into pieces or remains in one piece. Do not use any type of tissue that remains in one piece.

**NOTE: Never dispose of sanitary supplies or other non-dissolving items into the system. Facial tissue, wet strength tissue, paper towels or an excessive amount of toilet tissue can create clogging in the holding tank system.**

**CAUTION: Do not use any products that contain petroleum distillate or ammonia in place of RV odor controlling chemicals. Petroleum distillate or ammonia will damage the ABS plastic holding tanks and seals.**

## *Waste Drain & Sewage Tanks*

The waste drain system provides adequate and safe storage and/or discharge of waste materials. The drain system uses ABS plastic piping and fittings connected to sinks, shower, toilet and holding tanks draining to an outside termination. The motorhome should be reasonably level for optimum operation of the systems. The wastewater holding system consists of a wastewater holding tank (grey tank). The grey water tank stores the sink, shower and clothes washer drain water. A sewage holding tank (black tank) stores waste from the toilet only.

Drain valves and a tank flush system dispose waste through a common termination. Each holding tank has a separate drain valve dumping the waste water (grey water) and sewage (black water) through a common single discharge outlet. The tank drain valves are located service center on the roadside. Use the water monitor panel to observe tank levels. When ready to drain the tanks, drain the sewage tank first. Next, flush the black tank with the flush system. Close black tank valve after flushing tank. Drain the grey water tank. Using this sequence helps flush solids from the sewer hose. When traveling, it is recommend both holding tanks be empty or less than half full.

## Waste Drain Hose

A flexible three-inch sewer hose attaches between the termination drain and the shore facility. The termination drain by design is adjustable and should be exercised periodically. Sewer hoses usually come in 10 or 20 foot lengths. The sewer hose is stored in a tube accessed through a door on the roadside next to the rear tire. The shore fitting for the sewer hose may be a three or four-inch pipe, which could be male or female thread. Another possibility may be a four-inch pipe, with no threads, covered by a metal plate. There are many configurations. Different style adapters are available to fit most configurations. Hose ladders may also be purchased to support the hose.

It is important that the hose remains secure. **Always tighten clamps and restraining devices before use.** Lay the hose inline between the termination outlet and the shore fitting. Restrain the hose to prevent movement during use. Wear protective and/or disposable gloves when handling the sewer hose.

**To Exercise the Termination Drain:**

- Grasp the drain firmly on both sides of the drainpipe.
- Swivel the pipe up and down several inches. This exercises the internal O-rings.
- The drainpipe may be left in the upward position to prevent any residual material from leaking out.

**To Attach the Hose:**

- Remove sewer hose from carrier.
- Remove termination cap. Align coupler tangs with termination tabs. Twist coupler clockwise 90º locking coupler to termination outlet.
- Unscrew the access deck plate and feed the drain hose through the opening.
- Rotate the drainpipe downward for maximum flow.
- Attach the other end of the hose to the drain service. Restrain hose to prevent movement during use.
- Open the (small) grey water valve.

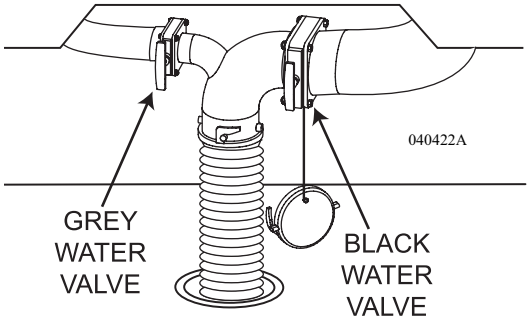


**LUBE: Lubricate the O-ring on the sewer hose adapter periodically with silicone spray.**

The black water valve remains closed until the tank is full or until time of departure. This will help prevent accumulation of solids. Use the outside faucet or shower attachment for washing or rinsing.

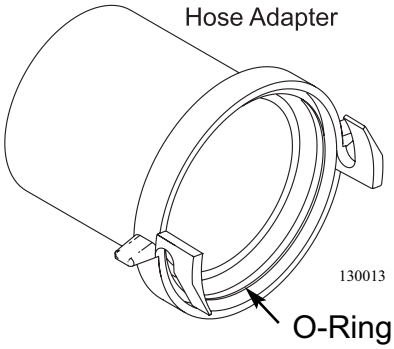


**NOTE: Close the grey water valve 24 hours prior to departing to allow the tank to fill with liquid to help in the dumping process.**

**NOTE: Use care when connecting the sewer hose adapter to the termination outlet in cold weather.**

### What to Put in Holding Tanks - Black Water Tank

Before initially operating the toilet, treat the sewage holding tank with a pre-charge of water and an odor-controlling chemical (available at most RV supply stores). First, add approximately three gallons of water to the holding tank. Next, mix the chemicals, in accordance with the manufacturer instructions, with approximately one gallon of water. Pour mixture through toilet to the holding tank. Be careful not to spill the chemical on your hands, clothing, toilet bowl or carpet as it can permanently stain. Extremely hot weather conditions may require adjusting the amount of chemical used to control odor. Repeat the chemical pre-charge to the holding tank each time the tank is cycled.

**WARNING: Most chemical mixtures for holding tank odor control are poisonous. Follow the product manufacturer's directions and warnings when using any holding tank additive. Do not use any products that contain petroleum distillate or ammonia in place of RV odor controlling chemical. Petroleum distillate or ammonia will damage the ABS plastic holding tanks and seals.**

### What to Put in Holding Tanks - Grey Water Tank

The grey water waste tank stores the sink, shower and clothes washer drain water. No chemical is required in this holding tank; however, a waste holding tank can produce odors. A reduced mixture of chemicals can help with odor control.

Ensure that there is enough liquid in the holding tanks prior to dumping the waste holding tanks. This provides a smooth flow through the valve, drain pipe and drain hose. When cycling the tank with sufficient liquid, a swirling action should remove accumulated solid wastes along with the waste liquid. Empty the sewage tank weekly to prevent stagnation and overfilling.

### Black Tank Flush

The motorhome comes equipped with a power flush system to aid in cleaning the holding tank. The power flush nozzle, located in the black tank, helps reduce solid build-up. Use the tank flush each drain cycle. Failure to thoroughly rinse the tank each drain cycle may result in solids accumulating and a clogged spray nozzle.

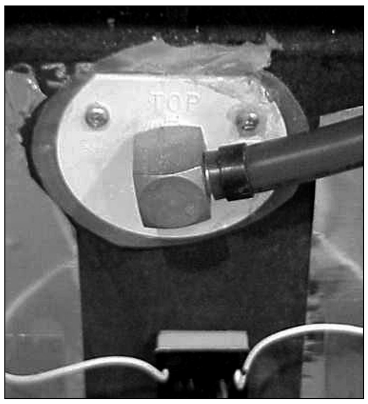

tank flush valve.eps

**Dumping the Tanks:**

1. When preparing to dump the black tank, first close the grey water valve.
2. Fill the grey tank to at least 50% by running water in the shower or sinks.
3. Use the monitor panel to observe tank fluid levels. When the grey tank is 50% full stop filling the tank.
4. Open the black water valve. Allow the black tank to drain.
5. Use the tank flush system.

6. Connect a non-potable water hose, with pressure regulator, to the flush system fitting located in the service center.
7. Turn on the faucet allowing water to rinse the black tank at least three minutes. Never operate the system unattended. Ensure the water flows freely though the drain hose.
8. When completed turn off the faucet and close the black water valve.
9. Open the grey water valve. The water in the grey tank flushes any remaining solids from the hose. With the grey water valve open, run two gallons of water down any drain to flush the grey tank. The grey valve remains open until the next drain cycle or departure.

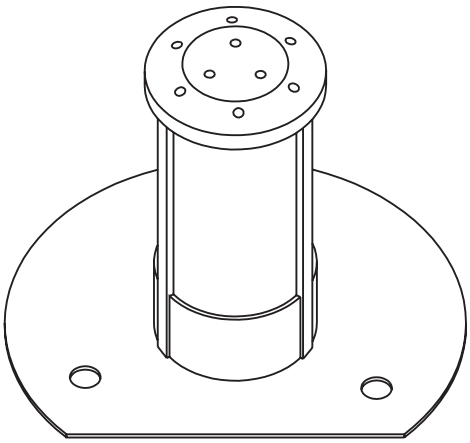


**WARNING: Never operate the flush system unattended. Flooding may occur. Use the tank flush system each time the holding tanks are cycled. Failure to routinely use the flush system will result in a clogged spray nozzle. Turn off the water supply when finished flushing the tank.**

6

10. If preparing for travel, close both valves. Undo Sany restraining devices from the hose. Disconnect the hose from the termination outlet by rotating the fitting counterclockwise 90º.
11. Raise the hose and drain using hand over hand method working the hose towards shore fitting. Rinse the hose with outside facility and repeat the hose drain process.
12. Remove the hose from shore fitting. Install hose in carrier and lock door. Secure the termination cap (required by law in some states).
13. If desired, add chemicals to the tanks to control odor. Follow the directions given by the manufacturer of the chemical.

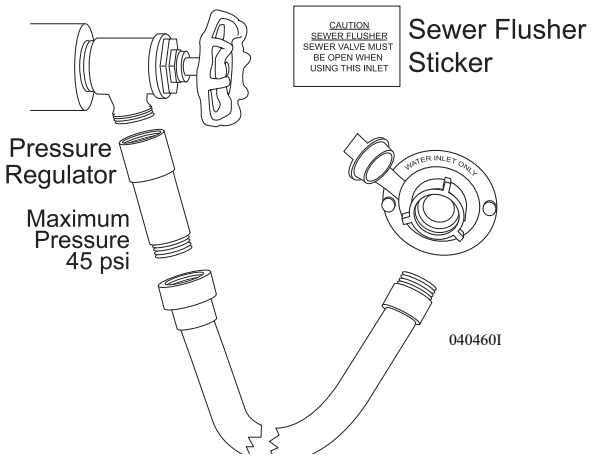


**NOTE: Dump the black tank before driving.**

## TOILET

The toilet uses water from either the fresh water tank or a city water supply. The water pump must be turned on or connect the motorhome to city water. The toilet uses 12 Volt DC to flush. The toilet flushes directly into the sewage holding tank (black water).

- **To add water to the toilet:** Lift the flush lever until the desired water level is obtained. Generally, more water is required when flushing solids.
- **To flush the toilet:** Momentarily push the lever down. Holding the lever down will not increase flush time or water flow. The flush cycle is a timed event controlled by a microprocessor. Water pressure and flow rates vary with location. It may be necessary to adjust the water level.

**NOTE: The toilet requires 12 Volt DC to operate. Low voltage will cause toilet malfunction or failure.**

**Control switches (two switches located under lid):**

- The Water Level switch adjusts the water level in the bowl after the flush cycle.
- The Function switch will reset the microprocessor or hold the ball valve open.

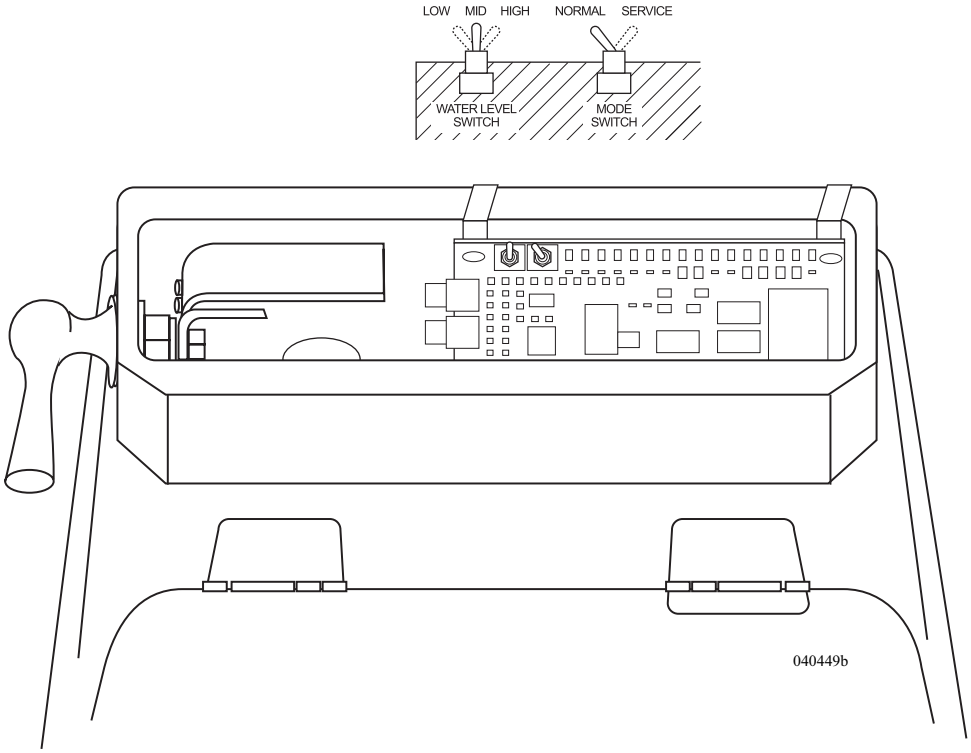

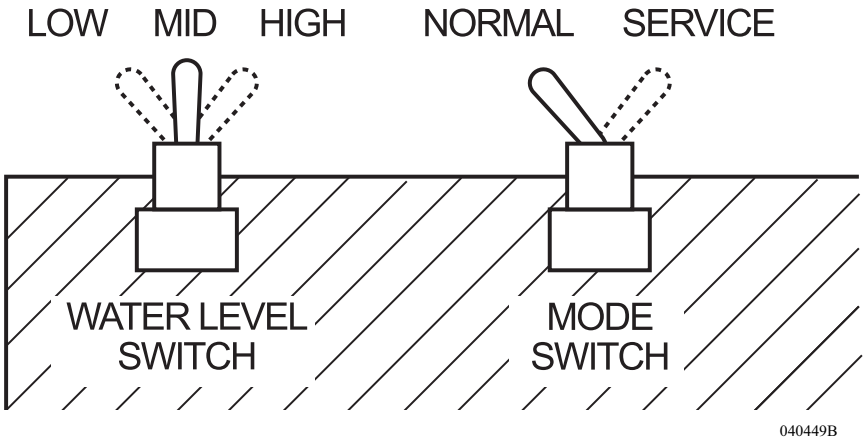


**Water Level Switch:**
This switch adjusts the water level in the bowl after the flush cycle.

**NOTE: Setting the switch to High increases water consumption and water spill may occur during travel.**

**Function Switch:**
- Pushing the switch to Service will hold the ball valve open. This feature is useful when adding chemical to the sewage tank.

**NOTE: To prevent accumulation of solids below toilet, add several gallons of water to the holding tank before use. Most chemical mixtures for holding tank odor control are poisonous. Follow the product manufacturer's directions and warnings when using any holding tank additive.**

**NOTE: Never dispose of sanitary supplies or other non-dissolving items into the toilet. Facial tissue, wet strength tissue, paper towels or an excessive amount of toilet tissue can clog the tank or termination valve.**

## Cleaning & Maintenance

The toilet should be cleaned regularly for maximum sanitation and operational efficiency. Clean the toilet bowl with a mild bathroom cleaner. Do not use chlorine or caustic chemicals, such as drain opening types, as they will damage the seals.

Clean out the system by using the tank flush system. If additional flushing is desired, flush with several gallons of fresh water and one cup of dry laundry detergent. Add odor control deodorant, in the amount specified for your holding tank capacity, after cleaning and every few days during use.

**Checking for Leaks:**

- **Back of toilet:** Check water supply line connection. Toilet tissue works well to find leaks. The tissue changes texture when it contacts moisture.

- **Between closet flange and toilet:** Check flange screws making sure they are snug. Do not over tighten screws. If leak continues, remove toilet and check flange height. Adjust, if necessary to 7/16" above floor. Replace flange seal if damaged.

- **Poor flush:** A good flush should be obtained within 2 to 3 seconds. If problem persists, adjust the water level. If it continues, the water pressure may be low or the water flow rate is low. Remove the water supply line and check flow rate. The flow rate should be at least ten quarts (9.5 liters) per minute. Water pressure should not be below 25 psi.

- **Bowl will not hold water:** Check for foreign material in ball valve.

**NOTE: If the motorhome is in storage for six months, it is a good idea to spray silicone on the ball valve. Perform this maintenance monthly (silicone will evaporate in about 30 days).**

## Drain Traps & Auto Vents

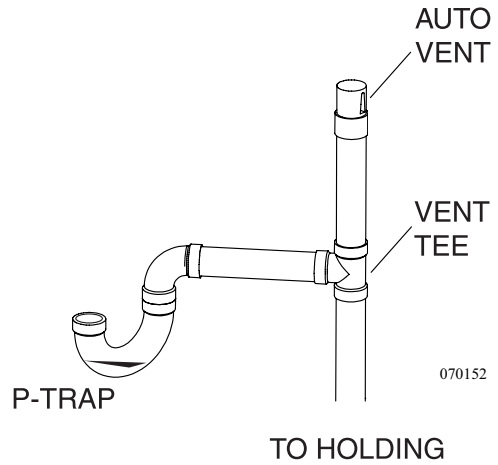


Sinks, shower and clothes washer drains incorporate a water trap or "P-Trap" and auto vents to prevent waste water holding tank odor from entering the motorhome. These P-Traps are usually within 54" of a vent tee. These traps must have water in them to block odors. During storage water can evaporate and allow odor into motorhome. If odor is detected run water into sinks, shower and clothes washer to fill drain traps. The auto vent by design is to assist in the flow of water in the drain lines. They enable a smooth flow of water in the drain without creating a vacuum.

The auto vent, if stuck in the open position, can allow grey odors to enter the motorhome. Some auto vents can double as "clean outs" in the event the line needs to be snaked out.

## COLD WEATHER CONDITIONS

A motorhome is not designed for extended use in below freezing (32° F/0° C) weather. However, you may not experience any problems as long as the temperature does not drop too low. Interior water lines, fixtures, water storage tanks and pumps are normally protected from moderate freezing temperatures, as long as the furnace is operating. Exposed drains may freeze quickly. If in doubt about what temperature the motorhome will tolerate, winterize with potable antifreeze.

### *Cold Weather Storage*

If the motorhome is stored where freezing temperatures may occur, drain the domestic fresh water loop completely of water. When draining the domestic fresh water system begin with draining the fresh water tank by opening the low point drain for the fresh tank and allowing the water to drain.

**NOTE: Ice makers, water filters, water purifiers, the water heater and Aqua-Hot all use domestic water and should be drained and stored in accordance with the manufacturer's recommendation for winterization.**

## WINTERIZATION



The water, plumbing and sewer systems will need to be winterized when the motorhome is placed in storage. Winterization is an easy process that only takes a few minutes if the proper equipment is used. Two basic methods may be used or combined to winterize. The use of compressed air to evacuate all liquids, and replacing all liquids with FDA approved RV antifreeze.

The recommended method of winterizing the motorhome is using air pressure to remove liquids that may freeze causing damage to the various systems and appliances. The lines can then be left empty or filled with an FDA approved RV antifreeze. Antifreeze is not necessary and the decision to use it is left to the customer.

**NOTE: ONLY FDA approved RV antifreeze should be used to winterize the water systems in the motorhome.**

### *Using Air Pressure*

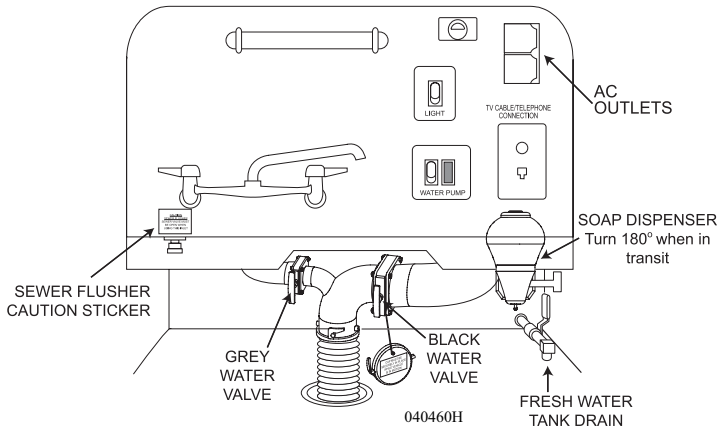


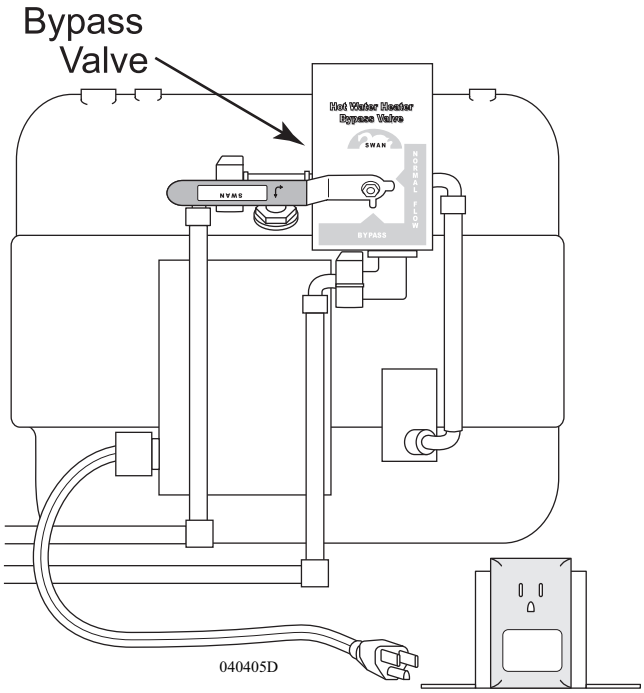


Access to an air compressor and an adapter to connect the air line with regulator to the water system will be needed. Air adapters for winterizing are available at RV supply locations. When attached to the water lines the pressure should not exceed 40 PSI. Higher pressure can damage the lines.

1. Empty and flush the holding tanks.
2. Drain the fresh water tank by opening the drain valve located inside the water service center of the motorhome.
3. Open all low-point drain valves. Let all the water drain.
4. Drain the water heater by removing the drain plug. This will be located near the bottom, inside the access door on the outside of the motorhome. The tank will need to be vented to allow water to come out. This can be accomplished by opening the high temperature/pressure relief valve located near the top, inside the access door. Set the bypass valve to "bypass" position. When the water heater is empty, replace the drain plug and close the relief valve.

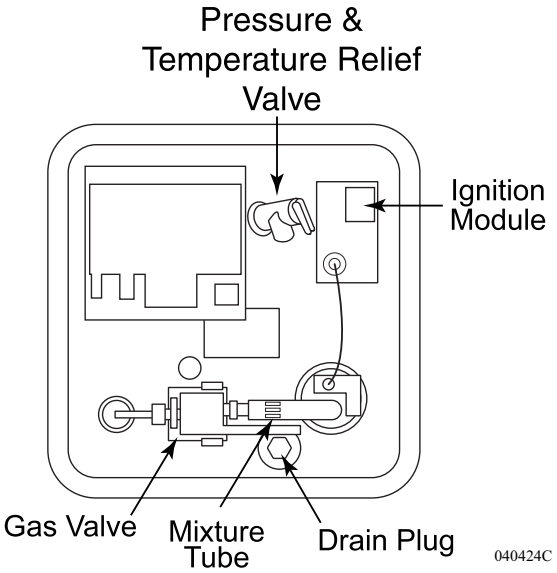

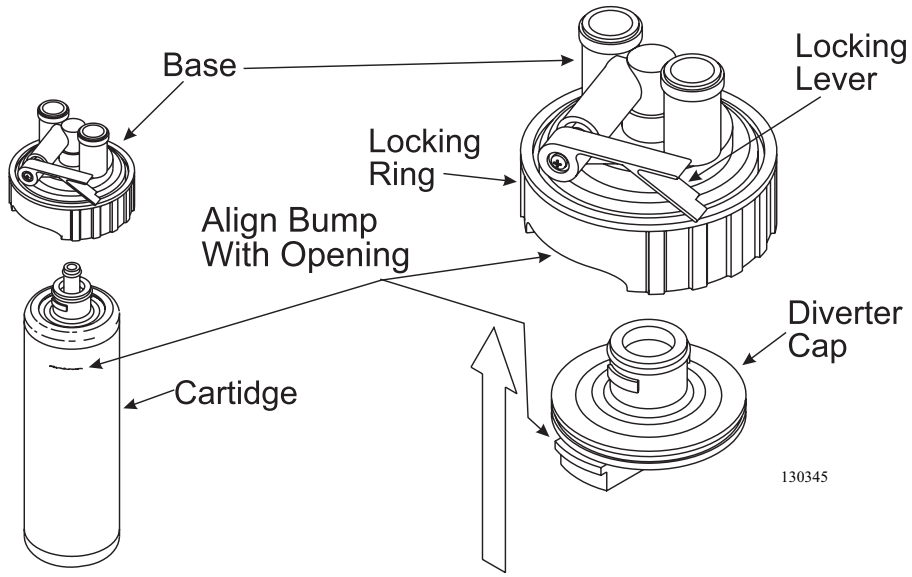


5. Locate water filter under sink and remove filter cartridge. Install Diverter Cap. Locate filters in bay, remove filters, replace canister and install a bypass hose.
6. Connect an air hose with regulator to the city/fresh water fill connection, with valve positioned for city water. Set regulator for 40 PSI and turn on air. (Air adapters for winterizing are available at RV supply locations.)
7. When water stops coming out of the drain valves, open and close the faucets one at a time hot and cold, until only air comes out. Don't forget the toilet and any outside faucets.
8. Hold the toilet flush mechanism open until the water has stopped running.
9. Disconnect the air hose with adapter and turn the city/fresh water valve to the tank fill position.
10. Close all valves, faucets and replace plugs.
11. One (1) gallon of FDA approved RV antifreeze is needed to protect various water drain lines in the motorhome. Pour 1 pint into both the kitchen and bath shower drains. Pour 2 pints into the bath sink drain. This will protect the P-traps, with some of the antifreeze going into gray tank to protect the drain valve. Open the valve on the toilet. Pour another 3 pints into the toilet, letting the antifreeze run into the black tank to protect the drain valve located there. Use a soft cloth to wipe out the sinks, shower and toilet (after the antifreeze is poured in) to protect the surfaces from stains. Pour the last pint into the washer/dryer drain.

**WARNING: When draining the low-point drain lines and the water heater ensure the water is not hot. Hot water from the lines can scald causing burn injuries.**

## Using Nontoxic Antifreeze

Ten gallons of FDA approved RV antifreeze will be required to winterize the motorhome.

1. Empty and flush the holding tanks.
2. It is not necessary to blow out the lines with air. Close valve located between water pump and fresh water tank.
3. At the back of the water heater, turn the water heater bypass valve to bypass. Remove the drain plug from the front of the water heater. Open the "high temperature/pressure valve" located near the top of the compartment.
4. Locate water filter under and removing filter cartridge. Install Diverter Cap. Locate filters in bay, remove filters, replace canisters and install a bypass hose.

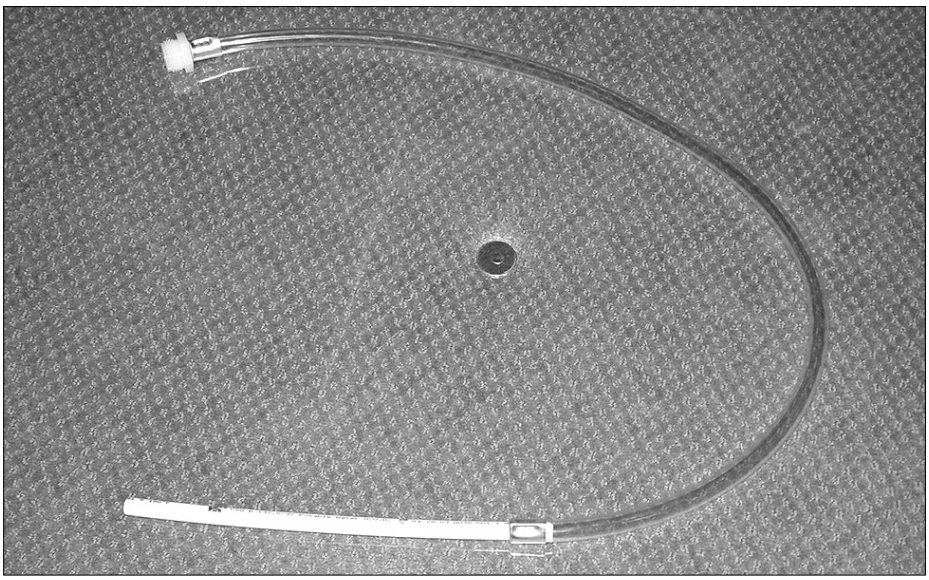

Winterhoze01.tif

5. Close all faucets, drain valves and low point drains.
6. Three ways to pump RV - Anti Freeze into system:

6a. If you have a pump for winterizing, (available at RV supply locations) attach the "out" side of the pump to the waterline on the outlet side of the motorhomes water pump, or winterizing connection if so equipped. The "in" side of the winterizing pump should have a hose attached and placed into the antifreeze source.

6b. The motorhome's water pump can be used for this procedure also, by connecting the threaded end of the "siphon hose" (included with coach) to the city/fresh water fill, and the other end into RV antifreeze source. The City/Fresh Water Fill Valve must be in Tank Fill position.

6c. The gravity fill can be utilized to introduce approximately 8 to 10 gallons of FDA approved RV anti-freeze into the fresh water tank. The valve between water pump and fresh water tank must be in the open position for this method.

7. Turn on the pump.
8. Turn on all the faucets, one at a time, hot and cold starting with the faucet farthest from the pump until you see antifreeze and turn it off. Be sure to do hot and cold. Don't forget the toilet in its turn as well as any outside faucets.
9. Use a soft cloth to wipe out the sinks and shower to protect surfaces from antifreeze stains.

**WARNING: Use only specifically designed, non-toxic, FDA Approved RV antifreeze for potable water systems. NEVER use automobile engine antifreeze. If ingested, antifreeze can cause serious injury or death.**

**WARNING: It is recommended that a qualified RV service technician familiar with motorhomes, such as an authorized dealer, perform the winterizing procedure.**

**NOTE: Some items such as icemakers, washer/dryers and dish-washers require special instructions, which can be found in your owners manuals.**

**NOTE: Clean up any spilled antifreeze immediately. It can stain permanently.**

**NOTE: If the motorhome is equipped with a hose reel, it may be necessary to bypass the hose when introducing the FDA Approved RV antifreeze using the "siphon hose" method.**

**CAUTION: Turn off water heater and let it cool before starting any winterizing procedure. Hot water can scald resulting in burn injuries.**

### *De-Winterizing*

To De-Winterize, drain and fill the fresh tank with water. Connect the power supply line for the water pump. Install drain plug to water heater and switch by-pass valve to Normal Flow. Operate all faucets, one at a time, until clear water is present.

**CAUTION: Discard the first two trays of ice from the icemaker. They may contain contaminants.**

## TANK CAPACITIES - CHART

| Water Tank Capacities | All Models |
|---|---|
| Water Heater | 10 gallons |
| Grey Tank | 60 gallons |
| Black Tank | 40 gallons |
| Fresh Tank | 100 gallons |
| Aqua-Hot (Opt.) | 16 gallons |

**Note: All tank capacities are estimated based upon calculations provided by the tank manufacturers and represent approximate capacities. The actual "usable capacity" may be greater or less then the estimated capacities based upon fabrication and installation of the tanks.**

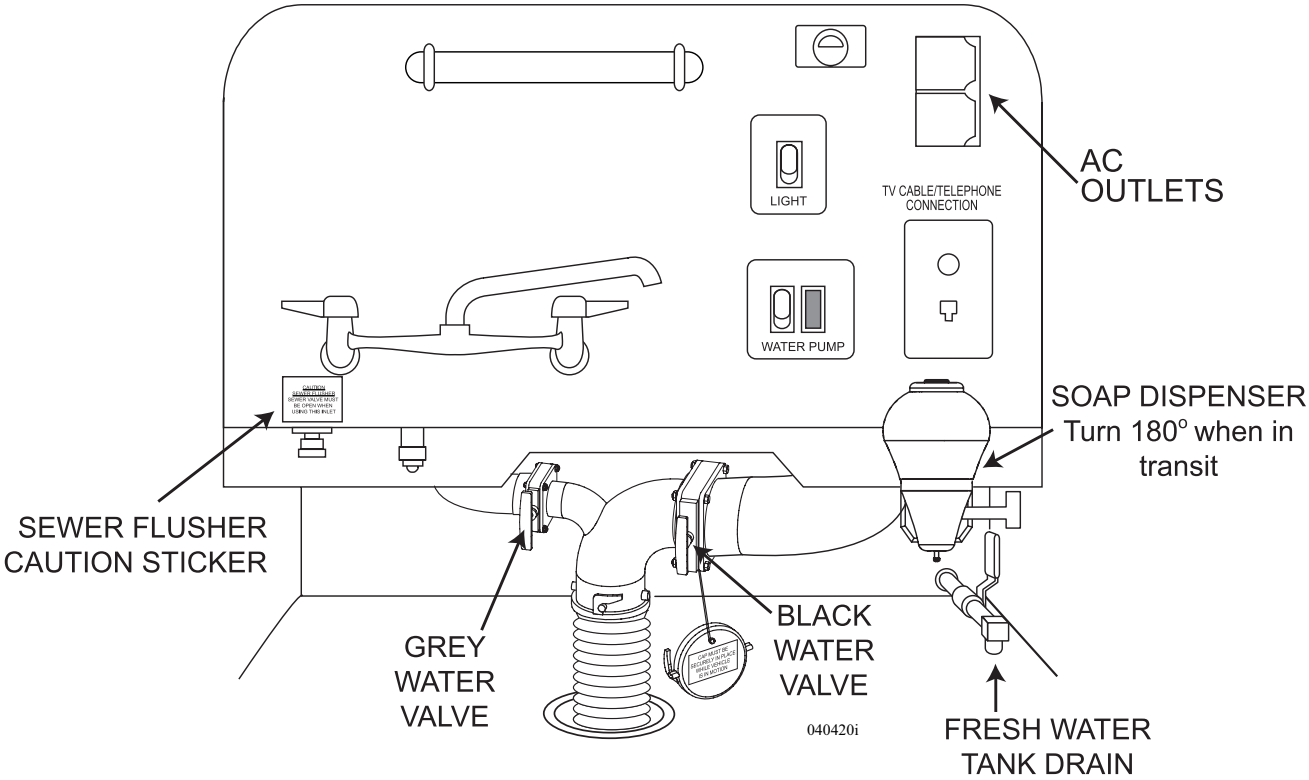


**NOTE: Layout of Service Center and location of components may vary with floor plans.**

## WATER PUMP DIAGRAM

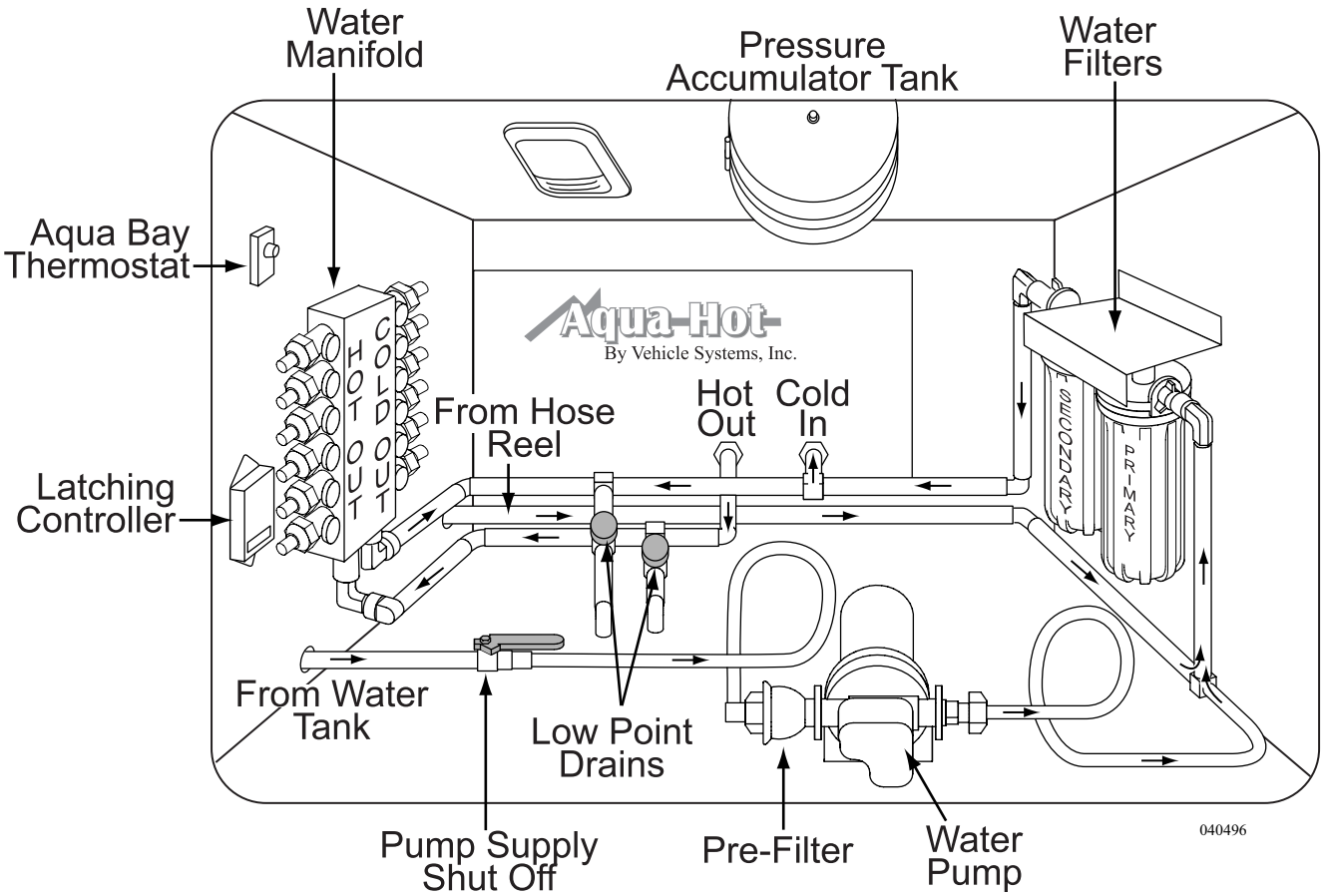

## WATER SYSTEMS DIAGRAM

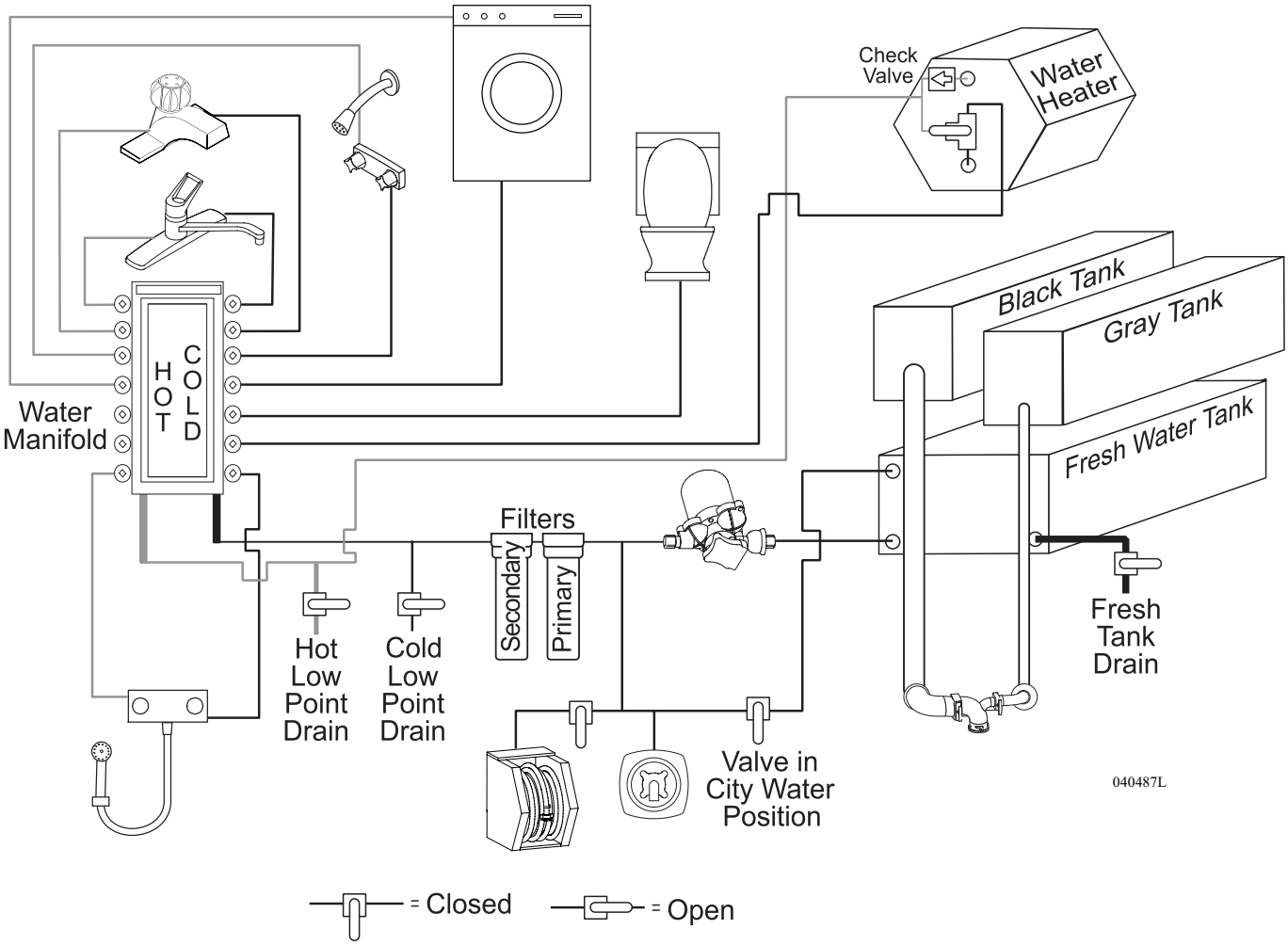

# ~ NOTES ~

# LP-Gas System
## Section 7

**LP-GAS SYSTEM** ..... **343**
**LP-GAS DETECTOR** ..... **344**
Testing ..... 345
Alarm ..... 346
Maintenance ..... 347
**LP-GAS TANK - MEASUREMENT** ..... **347**
**LP-GAS EMERGENCY PROCEDURES - CHECKLIST** . **347**
**LP-GAS TANK** ..... **348**
Tank Capacity ..... 348
**LP-GAS FUNDAMENTALS** ..... **350**
**LP-GAS REGULATOR** ..... **352**
**LP-GAS HOSE INSPECTION** ..... **355**
**LP-GAS CONSUMPTION** ..... **356**
**LP-GAS SAFETY TIPS** ..... **358**

This section contains information and instruction for the operation and care of the Liquified Petroleum (LP-Gas) system and related equipment in the motorhome. The motorhome has appliances and equipment which either operate on or are part of the LP-Gas system. Some items discussed may not be applicable to all motorhomes. More detailed information with **CAUTION** or **WARNING** instructions for the various equipment, other than what is found in this section, can be found in the manufacturer's manual in the owner's information box.

All components for the motorhome LP-Gas systems are approved for use in recreational vehicles by a nationally recognized testing laboratory. When properly handled, LP-Gas is a clean-burning dependable fuel for heat producing components. The LP-Gas tank mounted in the motorhome contains liquid petroleum gas that is under high pressure. As the fuel is used, liquid gas vaporizes and passes through the tank valve to a regulator that automatically reduces pressure. Low-pressure gas is then distributed to components through a pipe manifold system.

Component lighting problems are commonly caused by an improperly adjusted gas regulator. Do not attempt to reset the regulator. Adjustments need to be made by a dealer or an authorized service person.

In higher elevations or extreme cold weather (10° F/-21° C or lower) a shortage of LP-Gas may be experienced. Usage can be modified by running only one component at a time. For example, turn off the furnace while using the range. If LP-Gas is going to be used in higher elevations or cold climates for a long period of time, have an authorized service person adjust the LP-Gas regulator for these conditions.

Have the LP-Gas system checked by an authorized dealer at least once a year, and thereafter before every extended trip. Although the manufacturer and the dealer test the system carefully for leakage, travel vibrations can loosen fittings.

Leaks can be easily found by applying a leak detector solution on all connections. Leaks can usually be repaired by tightening the fittings. If not, shut off the main gas valve at the tank. Immediately see an authorized dealer for repairs. Hand tighten the tank valves only. Do not use a wrench or pliers as over tightening may damage valve seats and cause leaks. If a leak is suspected (which can be easily identified by the odor of rotten eggs or sulfur) never light a match, have an open flame or use any spark producing equipment or appliance.

**WARNING: LP-Gas is highly volatile and extremely explosive. Do not use matches or a flame to test for leaks. Use only approved LP-Gas leak testing solution for leak detection. Unapproved solutions can damage copper tubing and brass fittings. Never attempt to adjust LP-Gas regulators. Only qualified personnel should perform any maintenance or repair to the LP-Gas system.**

## LP-GAS DETECTOR

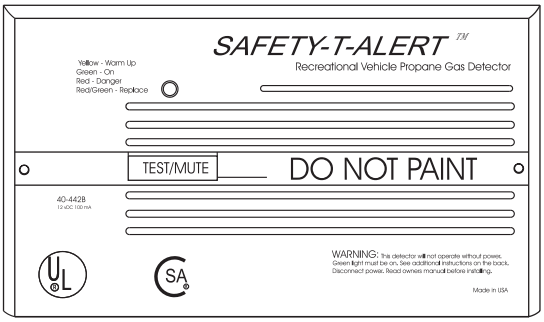


030646

The LP-Gas detector is required safety equipment in RVs. American National Standards Institute (ANSI) A119.2 - Fire & Life Safety 3-4.8 LP Gas Detectors states *" An LP Gas detector must be installed in any RV that contains an LP Gas appliance and an electrical system. The LP Gas detector must be listed as suitable for use in recreational vehicles under the requirement of UL 1484 Residential Gas Detectors, and installed according to the terms of its listing."*

The detector senses both LP-Gas and methane gas. Liquefied Petroleum (LP) Gas is heavier than air; methane gas is lighter than air. LP-Gas will settle to the lowest point, generally the floor of the motorhome. Methane gas will rise. The gas detector is also sensitive to other fumes such as hair spray, of which most contain butane as the propellant. Butane, like propane, is heavier than air and will settle to the floor level where it will be detected. Sulfated batteries (rotten egg odor) will also sound the alarm. When this occurs, reset the detector to stop the alert sound.

**About the LP-Gas Detector:**

It is important to be aware of the difference between a gas leak versus gas escaping from an unlit, open burner. Pure propane vapors from a leaking pipe or gas fitting are heavier than air and will build up their heaviest concentration at the leak and float down until they mix with air. Gas from open burners is intentionally mixed with air to induce burning and will dissipate into the air. When mixed with air, the gas becomes only marginally heavier than air and will expand outward. If a gas burner is left on, the area around the burner, range, and adjoining counter space will be combustible and can cause injury and damage if ignited. This condition will exist for an extended time period and eventually the gas will reach the detector's location and be detected.

**NOTE: The LP detector only indicates the presence of propane gas at its sensor. Combustible levels of LP-Gas may be present in other areas. This detector is intended for the detection of LP-Gas ONLY.**

The LP-Gas detector is not tested to detect other types of gas. However, other volatile gases (nuisance gases), most of them flammable in various concentrations, may cause the detector to alarm. Some products that may cause the detector to alarm are alcohol, liquor, kerosene, gasoline, deodorants, colognes, propellant used in spray cans and cleaning solvents. In some cases vapors from glues and adhesives used in the manufacturing of the motorhome may also cause the detector to alarm for several months after the date of manufacture. If it is determined that the detector has false alarmed because of the above mentioned nuisance gases, reset the detector and air out the motorhome with fresh outside air.

Take precautions to be sure one of these nuisances has not masked an actual gas alarm condition. The detector draws less current than one instrument panel lamp. The detector will operate to detect gas until the battery is drained down to 7.0 Volts. The detector must be supplied with a voltage higher than 7.0 Volts, for it to operate properly. If the power source is disconnected, or if the power is otherwise interrupted, the detector will not operate.

The LP-Gas leak detector has a self-check circuit which runs at all times while the detector is powered. In the event that the circuitry fails, a failure alarm will sound and the operating indicator will cease to light.

**LP-Gas Detector Operation:**

Upon first application of power the LED will flash yellow for three minutes while the detector is stabilizing. At the end of the start cycle the LED will turn Green, indicating full operation. If the detector senses unsafe levels of gas it will immediately sound an alarm. The gas detector operates on 12 Volt DC, with a current draw less than 1/10th of one amp.

**CAUTION: The detector will not alarm during the three minute warm up cycle.**

### *Testing*

Press the **TEST** switch any time during the warm up cycle or while in normal operation. The LED should flash red and the alarm should sound. Release the switch. This is the only way the detector should be tested. The test feature checks full operation of the detector.

**WARNING: Test the operation of this detector after the motorhome has been in storage, before each trip and at least once per week during use.**

## Alarm

The **red** LED will flash and the alarm will sound whenever a dangerous level of propane or methane gas is detected. The detector will continue to alarm until the gas clears or the **Test/Mute** switch is pressed.

**Procedures to Take During an Alarm:**

1. Turn off all gas appliances, (stove, heaters, furnace), extinguish all flames and smoking material. Evacuate, leave doors and windows open.
2. Turn off the primary valve on the LP tank.
3. Determine and repair the source of the leak. Contact a qualified professional for service, if necessary.

**CAUTION: Do Not re-enter until the problem is corrected.**

**Potential Sources of LP Gas Leaks When Operating the Motorhome:**

- Cooktop Burners
- Oven
- Furnace
- Refrigerator
- Water Heater
- Defective Regulator
- Defective LP-Gas Connection
- Portable Propane Powered Equipment

**Alarm Mute:**

Press the **Test-Mute** button when the detector is in alarm.

1. The **red** LED will continue to flash and the alarm will beep every 30 seconds until the gas level has dropped to a safe level.
2. The LED will flash **green** until the end of the **Mute** cycle.
3. If dangerous gas levels return before the end of the **Mute** cycle, the alarm will beep four times and return to phase 1.
4. After two minutes the detector will return to normal operation (solid **green**) or resound the alarm if dangerous levels of gas remain in the area.

**Fault Alarm:**

Should the microprocessor sense a fault in the gas detector, a fault alarm will sound twice every 15 seconds. The LED will alternately flash **red to green** and the **MUTE** switch will not respond to any command. The gas detector must be repaired or replaced.

1. Vacuum the dust off the detector cover weekly (more frequently in dusty locations) using the soft brush attachment of the vacuum.
2. Do not spray cleaning agents or waxes directly onto the front panel. This action may damage the sensor, cause an alarm or cause a detector malfunction.

## LP-GAS TANK - MEASUREMENT

Two methods can be used to monitor the amount of fuel in the LP-Gas tank. A small gauge is located on the LP-Gas tank. This non-adjustable gauge provides a quick view of the tank capacity. The Aladdin™ System will also provide a percentage full reading on the **COACH TANK/MISC STATUS** screen.

| COACH TANK/MISC STATUS | | |
|---|---|---|
| FRESH TANK | PCT | XXXXXXX |
| | GAL | XXXXXXX |
| GRAY TANK | PCT | XXXXXXX |
| | GAL | XXXXXXX |
| BLACK TANK | PCT | XXXXXXX |
| | GAL | XXXXXXX |
| LP TANK | PCT | XXXXXXX |
| BASEMENT TEMP | F | XXXXXXX |
| OUTSIDE TEMP | F | XXXXXXX |

020199

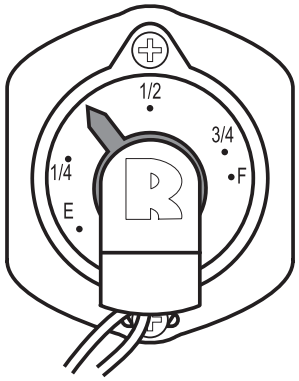


050256

*LP Tank Gauge*



## LP-GAS EMERGENCY PROCEDURES - CHECKLIST

If you smell gas (a rotten egg or sulfur smell) at any time, perform the following steps immediately:

- Shut off gas appliances.
- Manually turn off the primary shut-off valve at the LP-Gas tank.
- Do not attempt to operate any electric switch as this can produce a spark and could ignite the gas.
- Open windows and doors.
- Evacuate the motorhome. Stay clear of the surrounding area.
- Keep all sources of ignition out of the area.
- Contact a qualified service technician to find the source and repair the gas leak.

**WARNING: A fire or explosion from ignited gas or gas fumes can cause serious injury or death.**

## LP-GAS TANK - *Tank Capacity*

| LP-GAS TANK CAPACITY* | |
|---|---|
| All Models | 38 Gallons* |

**Actual filled LP capacity is 80% of listing due to safety shut-off required on the tank.*

Woodall's Campground and Trailer Guide and other similar publications list refueling stations. Many travel parks sell LP-Gas. Before filling the LP-Gas tank, shut off the electric valve at the LP Tank fill port, pilot lights, appliances and igniters to prevent a fire or explosion. Have a trained service person fill the LP-Gas tank.

The LP-Gas tank fill is located in the curbside compartment. Inform the service technician to purge any air from the tank before filling if the tank is new and being filled for the first time. When the tank is filled to the proper level, there is space available for the conversion of liquid into gas. If a tank is over-filled, it may cause the safety valve to release pressure. When this happens, a strong rotten egg odor near the tank and/or a hissing noise may be detected.

LP-Gas exists in both liquid and vapor within the LP-Gas tank. A "Full" tank is approximately 80% liquid. The pressure inside the tank varies with the temperature of the liquid. All tanks are required to be equipped with a safety pressure relief device. The purpose of the safety valve is to release excess pressure. When the tank is full, the gauge on the tank will only read 3/4 full. The monitor panel is adjusted to indicate "FULL" at this point.

**NOTE: Actual full liquid capacity is 80% of full tank capacity.**

**CAUTION: Pressure inside LP-Gas tanks can reach over 200 psi when exposed to direct sunlight. A high-pressure safety relief valve will purge excess high pressure if necessary. LP-Gas will stop vaporizing as the LP-Gas tank temperature approaches - 40º F. Appliances that consume large amounts of LP-Gas, such as the water heater or furnace, may need to be operated in sequence in extremely cold environments.**

**WARNING: Extinguish all sources of heat, sparks, flames and smoking materials within a 50 foot radius during the refueling process.**

1. Turn off pilot lights, all appliances and the engine. Close all vents, doors and windows to prevent vapors from entering the motorhome.
2. Remove dust cover to fill valve. Screw fill nozzle to fill valve.
3. Turn on dispensing pump, then open 80% bleed valve.
4. Open valve on fill nozzle dispensing liquid into tank.
5. Close valve on fill nozzle as liquid just begins to expel from 80% bleed valve.
6. Close 80% valve then shut off dispensing pump.
7. Open high-pressure bleed valve on fill nozzle to remove high pressure between dispensing pump and fill nozzle. Remove fill nozzle from fill valve.
8. Install dust cover.
9. LP-Gas appliances (especially the refrigerator) may have difficulty starting if they have not been used for a while. To speed the process of getting fresh fuel to the appliances, try lighting the stove first.

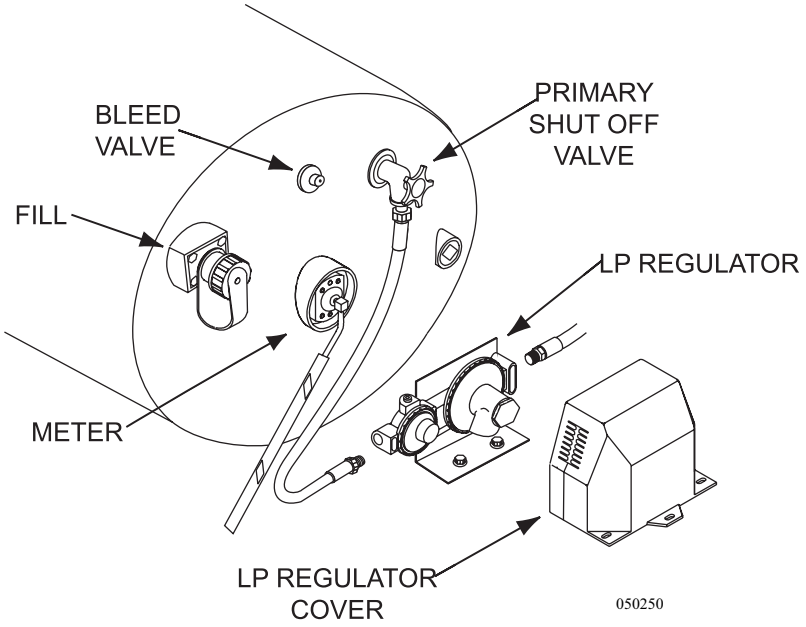


**WARNING: It is common for small amounts of liquid propane to escape and evaporate during the fueling process. Protect bare skin. Instant freezing will occur if exposed to liquid propane.**

**WARNING: When storing portable LP-Gas tanks that are not connected to an LP-Gas system, install an approved plug in the tank outlet holes to prevent leaks. Do not store or transport empty LP-Gas tanks, portable tanks, gasoline or other flammable liquids inside the motorhome. Keep open flame and spark producing materials away from the LP-Gas area. Shut off all appliances and the primary LP-Gas tank valve (located on the LP-Gas tank Roadside End) when the motorhome is in storage. If this warning is ignored, a fire or explosion could result.**

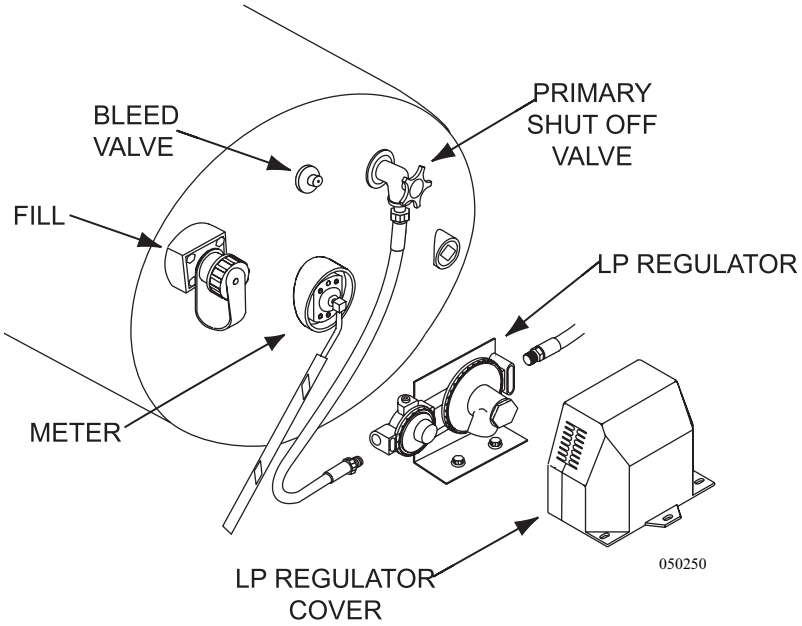


**Tank Operation:**

- Manually open the primary shut-off valve located on the LP-Gas tank.
- Turn off the primary valve on the LP-Gas tank when the motorhome is in between trips.
- Hand tighten the primary valve. Do not use a wrench or pliers to close the valve.
- The primary valve is designed to be closed by hand, over tightening may permanently damage the valve seat.

## LP-GAS FUNDAMENTALS

| # Capacity | Gallon Capacity | BTU Capacity |
|---|---|---|
| 5 | 1.18 | 107,903 |
| 10 | 2.36 | 215,807 |
| 11 | 2.59 | 237,387 |
| 20 | 4.72 | 431,613 |
| 30 | 7.08 | 647,420 |
| 40 | 9.43 | 863,226 |

**CONVERSIONS**

Gallons to Liters (1 Gallon = 3.785 Liters)
Fahrenheit to Celsius (F° - 32 ÷ 1.8 = C°)
11 in. Water Column = 6 1/4 ozs. per sq. in. pressure.
27.7 in. Water Column = 1 lb. per sq. in. pressure.

**The above capacities allow for 20% vapor space on each cylinder.**

*Data taken from the National Fire Prevention Association (NFPA). Pamphlet #58-1998.*

**LP-Gas Statistics:**

| | |
|---|---|
| Pounds Per Gallon | 4.24 |
| Specific Gravity of Gas | 1.50 |
| Specific Gravity of Liquid | .504 |
| Cubic Feet Gas Per Gallon of Liquid | 36.38 |
| Cubic Feet Gas Per Pound | 8.66 |
| BTU Per Gallon | 91,502 |
| BTU Per Pound | 21,548 |
| Dew Point in Degrees Fahrenheit | - 44° F |
| Vapor Pressure at 0° F | 31 |
| Vapor Pressure at 70° F | 127 |
| Vapor Pressure at 100° F | 196 |
| Vapor Pressure at 110° F | 230 |
| Flash Point | 842° F |

**Basic Facts About LP-Gas:**

- LP-Gas detectors are a federal requirement on all LP-Gas equipped recreation vehicles.
- LP-Gas is a by-product produced by refining oil.
- Odor is added to LP-Gas after the refining process.
- Each liquid gallon of LP-Gas produces 91,502 BTU (British Thermal Units).
- Temperature affects pressure of LP-Gas. Internal tank pressure can exceed 200 psi.
- Tanks or valves contain pressure relief valves. The relief valve opens at 125% above tank rating.
- LP-Gas stops vaporizing at -44º F.
- Standard LP-Gas operating pressure is 11" of Water Column or approximately 6 ¼ ounces per square inch.
- An inch of Water Column is a measurement of applied pressure to one side of a U-Tube ½ filled with water at sea level. The amount of pressure required to raise the water level 11", represents 11” of Water Column.

**NOTE: The above information is not a complete guide for the use of LP-Gas tanks or appliances. In cold climates keep fuel levels above 50% in order to keep vaporization of LP-Gas at the highest level.**

## LP-GAS REGULATOR

LP-Gas is compressed into liquid form in the tank. Only the vapor is used during combustion by an appliance. As vapor is removed from the tank, the remaining liquid will vaporize to maintain pressure that is removed during consumption. This process will continue until there is no liquid remaining in the tank.

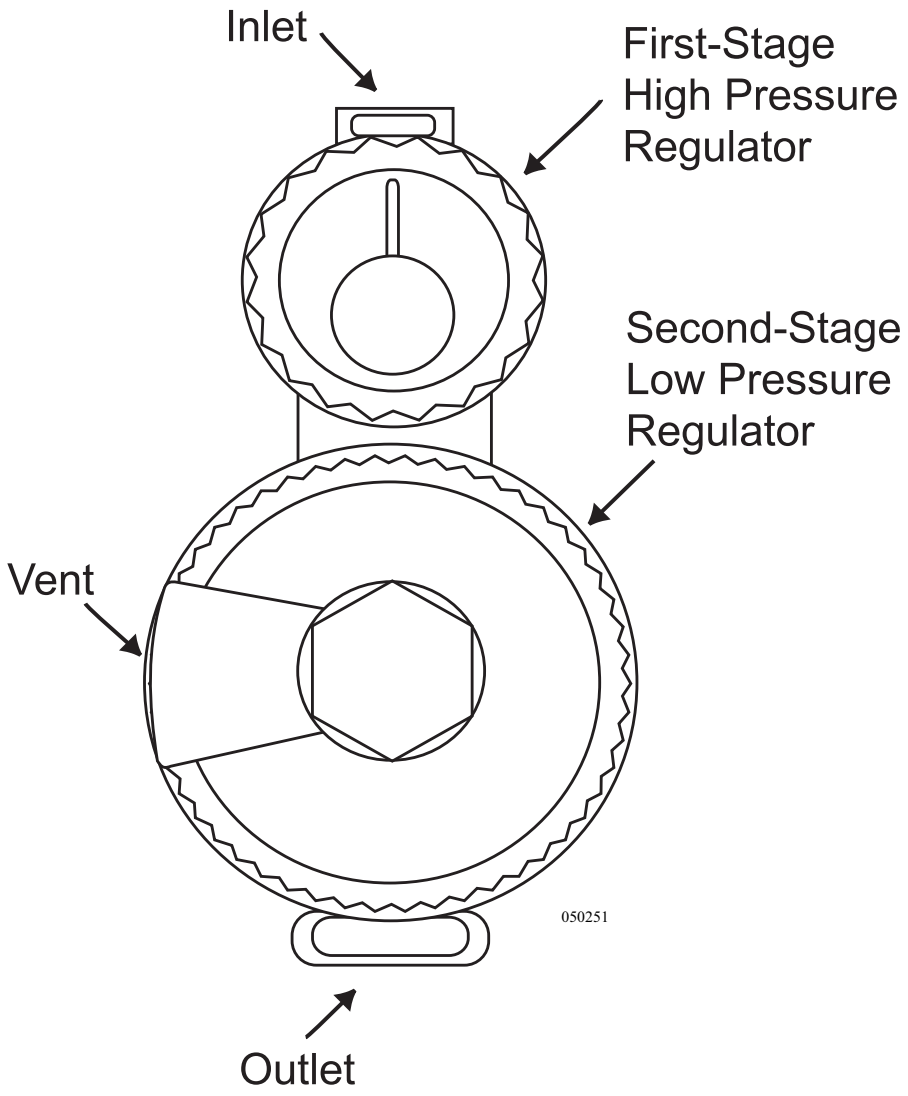


Temperature affects action of the liquid to vaporize. If temperature of the liquid is - 44º F. the liquid remains stable with tank pressure, about 0 psi. If liquid temperature is 100º F. the liquid quickly vaporizes with tank pressure, about 200 psi. Vapor pressure must remain relatively consistent regardless of temperature so that appliance heat output remains stable. Vapor pressure regulation is performed by the regulator.

The regulator is the heart of the LP-Gas system. The regulator reduces vapor pressure so that it is safe to use. The regulator on the motorhome is a two-stage regulator. The first stage of the regulator reduces tank pressure to a range of 10 to 13 psig (pounds per square inch gauge). The second stage further reduces pressure to a working pressure of 0.4 psig (11 Inches of Water Column or about 6¼ ounces psi.). The regulator has a vent that allows the internal diaphragm to move with atmospheric pressure change. It is important to keep the vent clean and clear of obstructions or corrosion. If the vent becomes clogged, pressure from LP tank could cause erratic pressure regulation. If there is any corrosion, contact a qualified LP-Gas service technician. The regulator is mounted so that the vent faces downward. If the vent becomes clogged clean it with a toothbrush.

Under normal atmospheric conditions an LP regulator will not freeze, nor will the LP-Gas. Vapor passing through the regulator will expand and cool condensing moisture in the gas. The moisture will freeze which can build up and partially or totally block the vent. The possibilities of freeze up are greatly reduced with the two stage regulator.

**To Prevent Freeze Up:**
- Ensure the LP tank is totally free of moisture prior to filling.
- Ensure the tank is not overfilled.
- Keep the valve closed when the tank is empty.

**If a freeze up occurs:**
- Have an LP-Gas distributor purge the tank.
- Have the LP-Gas distributor inject methyl alcohol in the tank.

Damage to the regulator can occur when the tank is overfilled. The regulator is designed to work with vapor only. This is why the tank is filled to only 80% of its liquid capacity. The other 20% allows for vaporization of the liquid. The primary vapor valve is located in the vapor section of the tank. In an overfilled tank, liquefied petroleum can fill the regulator. As the liquid vaporizes, it can freeze the diaphragm. High tank pressure on a frozen diaphragm can cause a rupture resulting in erratic pressure regulation. This is why it is important to have the LP-Gas pressure checked for proper pressure and accurate regulation during appliance operation. Erratic pressure regulation dramatically effects furnace output, water heater recovery time and refrigerator operation on LP-Gas.

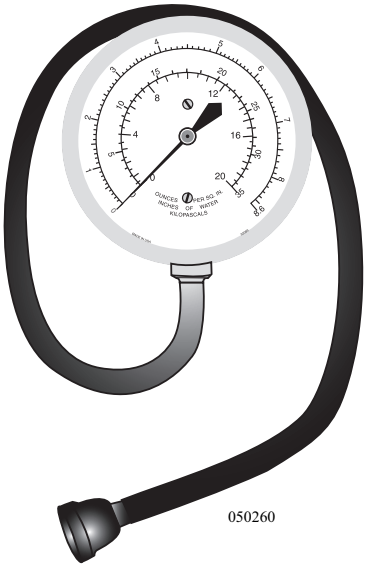


**Manometers:**

The manometer is the best way to accurately determine LP-Gas pressure. There are two different styles of manometers, a gauge and a U-tube. Gas pressure is measured in Inches of Water Column. This is the amount of pressure applied to one side of a U-shaped tube half filled with water. The amount of pressure needed to raise the column of water **11"** represents **11 Inches of Water Column**.

**WARNING: Do not attempt to adjust the regulator, it is preset at the factory. If adjustments need to be made it requires special equipment. Failure to follow these instructions may result in a fire or explosion and cause severe personal injury or death. Do not operate any LP-Gas appliance until the LP-Gas pressure is checked and a leak down test is performed!**

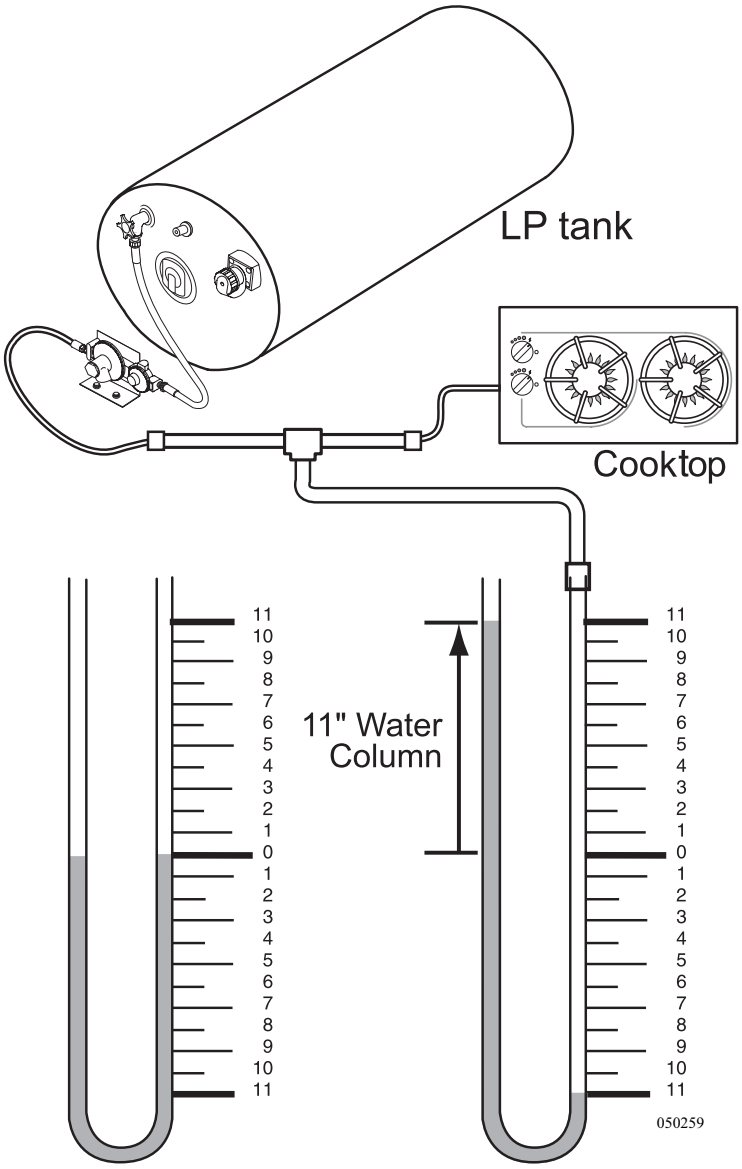

## LP-GAS HOSE INSPECTION

It is suggested by the hose manufacturer that the Liquid Propane Gas (LP-Gas) supply hoses, used on the motorhome, be subject to regular inspection. As a guideline, we suggest that all flexible LP lines connecting the slide-out, appliances, or tanks be inspected in the spring and fall of each year by a qualified RV technician.

According to the manufacturer, the inspections should consist of the following procedures and be performed when the hose is not under pressure:

1. **INSPECTION:** Inspect the outside cover of the hose for blistering, abrasion or cuts and coupling slippage. Cuts in the hose cover, which expose or damage the reinforcement, is cause for replacement. Hose strength is controlled by the plies of the reinforcement and damage in this area cannot be tolerated. Small cuts, nicks, or gouges in the cover that do not go completely through the cover will not be cause for replacement of the hose.

**NOTE: Uniform pin-holes present on the surface of the hose are not to be considered a defect. These pinholes are necessary for satisfactory hose performance and are incorporated into the design by the manufacturer.**

2. Damage to the textile reinforcement or wire braid is cause for hose replacement. Wire braid reinforced hose, which has been kinked or flattened so as to permanently deform the wire braid in the un-pressurized state, shall be removed from service.
3. Blistering or loose outer cover is cause for hose replacement.
4. Examine couplings for slippage. Slippage is evidenced by the misalignment of the hose and coupling and/or the scored or exposed area where slippage has occurred. Any evidence of slippage is cause for hose replacement.
5. It is important that if a damaged LP-Gas hose is found, the source of the damage be determined and corrected prior to the replacement of the LP-Gas hose.

**NOTE: Only a qualified RV technician should complete replacement of LP-Gas components.**

It is also suggested, that the flexible LP-Gas supply lines on your recreational vehicle be replaced every ten (10) years. The manufacturer of the LP-Gas supply lines recommended this schedule after performing extended testing and have determined that the failure rate may rise after this period of time. The motorhome manufacturer recommends following these guidelines to assure your continued safety and the dependable use of your recreation vehicle.

## LP-GAS CONSUMPTION

Each gallon of LP-Gas produces 91,502 BTU's of heat. One 27 gallon tank produces two million BTU's. Total consumption depends on the rate of usage by each appliance and the operating time. The stove and heating systems typically use the most gas. With sub-freezing temperatures and high winds, consumption by the furnace can be very high. Check the tank level often in cold weather.

**Determine Fuel Consumption:**

To determine approximately how many hours an LP-Gas appliance will operate on one gallon of LP use the following formula:

- LP-Gas appliances are rated in Input BTU (British Thermal Units). The rating is usually stamped or printed on a tag affixed to the appliance. For example: the Input rating of the appliance is 10,000 BTU's.
- One gallon of LP-Gas produces 91,502 BTU's.
- Divide the amount of BTU's of one gallon of LP-Gas (91,502) by the rating on the appliance in this example 10,000. Net continuous operation time for one gallon of LP-Gas for this appliance would be approximately 9.2 hours.

| Typical Appliance BTU Ratings |
|---|
| **Water Heater (Suburban)**<br>10 gallon - 10,000 BTU |
| **Furnace (Suburban)**<br>40,000 BTU |
| **Cooktop**<br>Large - 12,500 BTU<br>Small - 6,000 BTU |
| **Refrigerator (Norcold)**<br>2-door - 1,500 BTU<br>4-door - 2,200 BTU |

The above formula can be useful when trying to determine the approximate length of time a tank of LP-Gas will last. Generally, LP-Gas appliances do not operate continuously. An example would be the typical cycling of the furnace or water heater.

**Determining how long a tank of LP-Gas will last:**

- Combine the BTU input totals of all appliances and the approximate length of time these appliances operate per day.
- Multiply the number of liquid gallons in the LP tank by 91,502.
- Divide the total of BTU's of the LP tank by the total number of BTU's the appliances consume equals the approximate number of hours of operation before refueling.

**WARNING: LP-Gas is highly volatile and extremely explosive. Never use matches or open flame to test for leaks. Use only approved LP-Gas leak testing solution to test for leaks. Unapproved solutions can damage copper tubing and brass fittings. Never attempt to adjust LP-Gas regulators without the use of proper equipment. Improper LP-Gas regulator adjustment will affect the performance of LP-Gas operated appliances. Incorrect flame or explosion can occur. Only qualified personnel should perform any maintenance or repair to the LP-Gas system.**

A primary manifold black steel pipe running throughout the motorhome distributes LP-Gas to secondary lines. All secondary lines leading to gas appliances are made of copper tubing with flared fittings. If any lines rupture do not attempt to splice them. Always run a new line. It is recommended that gas distribution work be performed by an authorized dealer or an authorized service technician. When removing or servicing any gas appliance, manually close the primary valve located on the end of the LP-Gas tank. This will prevent dangerous gas leakage that could result in an explosion and possible serious injury.

**INSPECTION:** Inspect the rubber flexible lines, twice a year, for abrasions, tears, kinks or other signs of damage.

If a gas leak is suspected, get the system inspected and repaired by a qualified service technician as soon as possible.

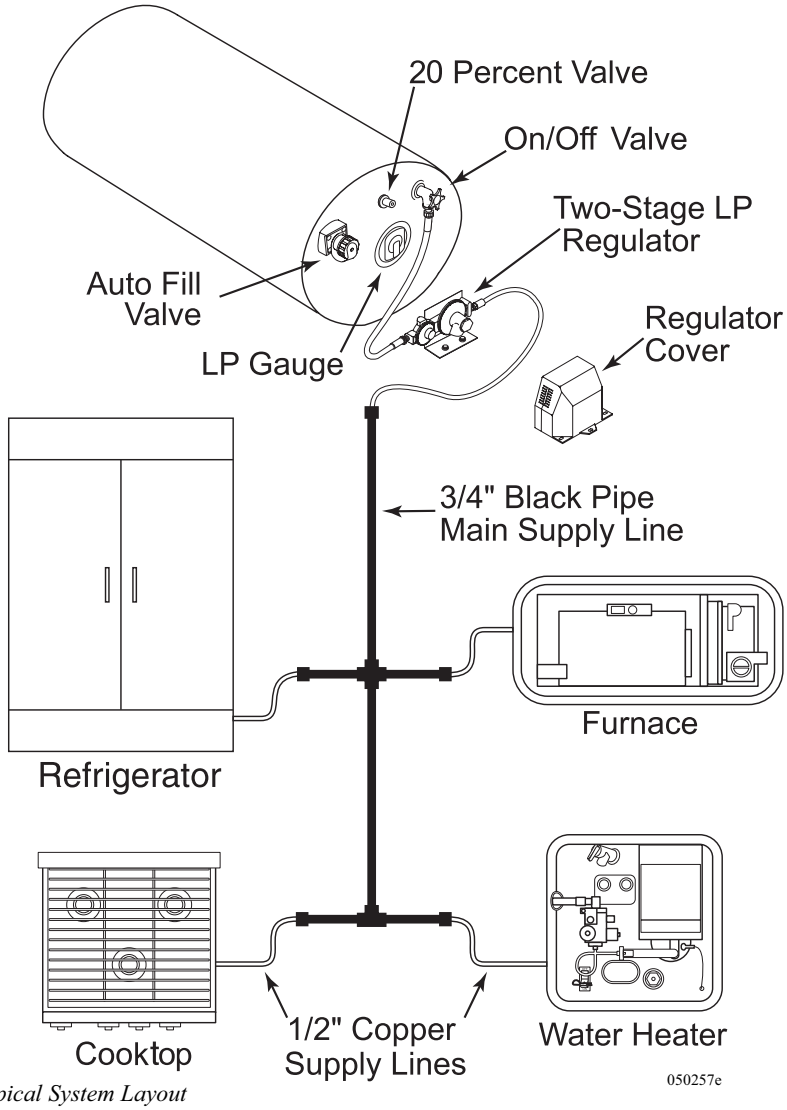


*Typical System Layout*

## LP-GAS SAFETY TIPS

Liquid Propane gas is one of the safest and most reliable fuels available on the market if it is handled properly. LP-Gas, however, does have a great explosive "potential" if handled improperly. Danger is minimized by becoming familiar with and following a few safety precautions, and by learning how to properly operate LP-Gas appliances. Use of LP-Gas requires the responsibility to enforce extra safety measures.

The motorhome is equipped with many LP-Gas operated appliances because it is a convenient and efficient source of fuel. LP-Gas appliances must be operated and maintained in accordance with the product manufacturer's instructions.

The National Propane Gas Association (NPGA) has a special service program offered called GAS® (Gas Appliance System) Check. The GAS® Check program is aimed at educating the users in the association about the convenience of propane use with safety and peace of mind. For information on the **NPGA Gas® Check program, call (630) 515-0600 or visit www.npga.org.**

**LP-Gas Tanks and Cylinders:**

Tanks are built to American Society of Mechanical Engineers (AMSE) Code. The cylinders are built to DOT (Department of Transportation) Code. The major difference between cylinders and tanks is in required testing and inspection procedures and in the construction of the containers. Both tanks and cylinders are required to undergo pressure testing and inspections; however, the procedures for how they are tested and inspected differ.

The difference between the two codes are that the valves, fittings and brackets are located only on the ends of the DOT cylinders; however, on the ASME tanks they may be located on ends, as well as the sides. There is also a difference in how the tanks are rated. Required tank ratings are in gallons (ASME ratings) or pounds (DOT) water capacity. The Federal DOT (Department of Transportation) regulations require periodic inspections and re-qualifications of cylinders.

American Society of Mechanical Engineers (AMSE) tanks or bulk containers are generally used in the motorhomes and motorized products. These tanks are permanently mounted on to the unit.

An alloy steel two-piece welded and brazed tank is used on all towable products. The marking on the collar, DOT 4BA240, identifies the DOT specifications and service pressure. Other pertinent information included on the collar is the water capacity (WC) and the tare weight (TW), both which are measured in pounds, and the Manufacture date (one of the most important items). There is a required 12 year re-qualification. The final piece of information is for the Dip Tube (DT) length. This is part of the overfill protection and maximum liquid allowance in the cylinder.

**Maintenance and Safety Tips for the LP-Gas Refrigerator:**

- Have the refrigerator, furnace and venting **inspected** annually by an authorized service center.
- Before firing up the refrigerator, or using the propane gas furnace for the first time each season, have the venting system checked for blockage. Insects may have built nests that will obstruct flow.
- At the first indication of incomplete combustion (yellow flame instead of a blue flame or soot is present) contact a service technician immediately. Improper combustion can cause carbon monoxide buildup, which is potentially fatal!

**Maintenance and Safety Tips for the Propane Range:**

- Burner flame should be a blue color, indicating complete combustion. If not, have the unit serviced by a qualified technician.
- Do not cover the oven bottom with foil. Air circulation will be restricted.
- Never use gas ranges or ovens for heating purposes.
- Always have pot handles turned inward.
- Ensure children understand never to turn or play with the knobs on the front of the propane gas range.

# ~ NOTES ~

# Electrical Systems - House

## Section 8


**HOUSE ELECTRICAL - INTRODUCTION . . . . . .363**
Shore Power . . . . . .363
Generator . . . . . .363
Inverter/Converter . . . . . .364
**BATTERY DISCONNECT - HOUSE . . . . . .364**
**BATTERY CUT-OFF SWITCH . . . . . .365**
**SHORE POWER HOOK-UP . . . . . .365**
Power Cord Reel . . . . . .369
AC Volt & Amp Meter . . . . . .370
**TRANSFER SWITCH . . . . . .370**
**GENERATOR - 240 AC . . . . . .371**
Pre-start Checks . . . . . .372
Starting the Generator . . . . . .372
Stopping the Generator . . . . . .373
Powering the Equipment . . . . . .373
Generator Fuel . . . . . .374
Resetting the Circuit Breaker . . . . . .374
Generator Exercise . . . . . .375
**GENERATOR - AUTO GEN START (RC7 GS) . . . .375**
**INVERTER . . . . . .378**
RC7 GS Remote . . . . . .379
Stand-By Operation . . . . . .380
Battery Charging with the Inverter . . . . . .380
Battery Temperature Sensor . . . . . .381
Pass-Through AC Power . . . . . .381
Main Menu Display . . . . . .381
Meters Menu . . . . . .382
Programming the Inverter . . . . . .383
Re-booting the Inverter . . . . . .387
**INVERTER - SINE WAVE (OPT.) . . . . . .388**
Remote . . . . . .389
Programming & Resetting . . . . . .391
Stand-by Operation . . . . . .392
Battery Charging . . . . . .392
Battery Temperature Sensor . . . . . .393
Pass-Through Power . . . . . .393
Meters Menu . . . . . .393
Automatic Generator Start Programming . . . . . .394
Inverter Facts . . . . . .398
**DISTRIBUTION PANEL - HOUSE 110 . . . . . .399**
Circuit Breaker . . . . . .400
**GFCI BREAKERS & OUTLETS . . . . . .401**
**DISTRIBUTION PANEL - HOUSE 12 VOLT . . . . . .402**
**FUSES . . . . . .402**
Tools of the Trade . . . . . .403
Knowing When to Say When . . . . . .403
**BATTERY . . . . . .404**
How It Works . . . . . .404
Starting Battery . . . . . .404
Deep Cycle Battery . . . . . .405
Battery Trays . . . . . .405
Battery Maintenance . . . . . .406
Testing the Battery . . . . . .406
Reasons Why Batteries Fail . . . . . .408
Battery Voltage & Current . . . . . .409
Battery Charge Time & Consumption Rate . . . . .410
**BATTERY SPECIFICATIONS CHART - HOUSE . . .412**
**SOLAR PANEL . . . . . .413**
Charge Controller Features . . . . . .414
Solar Panel Care . . . . . .415
**LIGHTS - INTERIOR HALOGEN . . . . . .416**
**BULB USAGE - INTERIOR . . . . . .416**
**ALL ELECTRIC (OPT.) . . . . . .417**
Overview . . . . . .417
Meters . . . . . .418
Remotes . . . . . .418
House Batteries . . . . . .420
Main Battery Disconnect . . . . . .421
Alternator . . . . . .422
Wiring Systems Interfaced . . . . . .422

## HOUSE ELECTRICAL - INTRODUCTION

The motorhome 120/240 Volt AC system can be operated from three different power sources: shore power, the on-board generator or the inverter/ charger. Shore power is the most efficient and should be used whenever possible. The generator can be used when shore power is unavailable. The inverter/charger supplies silent AC power using the house batteries of the motorhome. This source has limited AC power output and should be used sparingly.

Two different sources supply the main AC circuit breaker panel with power: the 50 Amp shore power cord or the on-board generator. The power source used is selected automatically by an automatic electrical switching device known as a transfer switch. The inverters supply AC power to the sub-panel.

**WARNING: The electrical system is engineered and tested for complete safety. Circuit breakers and fuses protect the electrical circuits from overloading. If you plan modifications or additions to the electrical system, we strongly recommend consulting your dealer for assistance to ensure continued integrity and safety of the electrical system. Please note that any modifications may void the warranty.**

**Warning: Water is electrically conductive. Do not use any electrically powered item or electrical outlet that may be exposed to a water source, such use can result in a serious shock resulting in injury or death.**

### *Shore Power*

The motorhome is equipped with a shore power cord. The electrical cord connects the motorhome to outside electrical services. Shore power service is the most efficient source of electrical power. Use this as the primary power source. The plug end of the shore power cord is 50 Amp 240 Volt. Many facilities are equipped with this power service. When this type of power service is not available electrical adapters will be required to allow a proper and safe connection to the electrical service supply.

**NOTE: When 50 Amp shore service is not available, care will have to be used when operating the appliances and using the outlets so the shore power service will not be overloaded.**

### *Generator*

The generator can be selected for use when AC shore power is not available. The maximum amount of generator output power, measured in watts, is calculated at an elevation of 500 feet above sea level. This figure will decrease slightly with a higher altitude. Ambient temperature also effects total maximum output. The amount of AC electrical load applied to the generator determines fuel consumption.

### *Inverter/Converter*

The inverter/charger can be used for silent AC power if shore power is not available, and using the generator is not going to be selected as a secondary power source. This device has limited AC power output, measured in watts, and operates only selected appliances and outlets. The inverter/charger is two components in one. The first function is an auxiliary 120 Volt AC power source that uses 12 Volt DC house battery power to invert to 120 Volts AC. The second function of the inverter/charger is to use 120 Volts AC power, supplied from either shore power or the generator, and convert it to 12 Volts DC power to recharge the batteries. When dry camping, the inverter may be used to supply power to selected outlets.

## BATTERY DISCONNECT - HOUSE

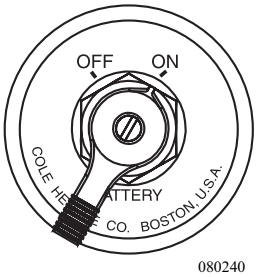


*Located in the rear compartment, curbside.*

The main house battery disconnect switch turns the battery power supply on or off. The domestic battery disconnect switch shuts off the 12 Volt DC power to the following items: the inverter, the domestic fuse panel in the bedroom, the domestic fuse panel in the front run box and the domestic power supply in the rear run box(s). Turn the main battery disconnect switch off when the motorhome is going to be stored or before performing electrical maintenance on the motorhome. If possible, leave the motorhome plugged into an AC source with the battery disconnect switch on. This will help prevent the possibility of dead batteries. Use of the battery cut-off switch at the entry door will not turn off all DC electrical items or other parasitic loads. There are small parasitic loads that are present on the house battery. Some are federal mandate items such as the LP-Gas detector. If an AC power source is not available and the motorhome is not going to be used or is stored more than 48 hours, it is recommended to turn the battery disconnect switch off.

**NOTE: The solar panel will charge the batteries with the disconnect switches off.**

**WARNING: When the frame or other welding is involved for motorhome repair or modification, the following precautions are required to protect electronic components in the motorhome chassis:**

1. **Disconnect the (+) positive and (-) negative battery connection, and any electronic control ground wires connected to the frame or chassis.**
2. **Cover electronic control components and wiring to protect from hot sparks.**
3. **Disconnect the wiring harness connectors at the transmission electronic control unit.**
4. **Do not connect welding cables to electronic control components.**
5. **The welding ground cable should be attached no more than two feet from the area to be welded.**

## BATTERY CUT-OFF SWITCH

The battery cut-off switch is located inside next to the entry door. This switch controls the 12 Volt DC power to the domestic fuse panels. The switch locks into the center position preventing interior DC power from being accidentally turned on or off. When the switch is activated, power is supplied to all interior DC lighting and DC operated appliances. Some appliances will require both DC and AC power to operate, such as the roof air conditioner. This switch is helpful when dry camping and can be used to conserve house battery power. Refrigerator and inverter operation are unaffected by the operation of this switch. When the interior house power is off, there are still parasitic loads on the house batteries and therefore is not a substitute for the main battery disconnect switch.

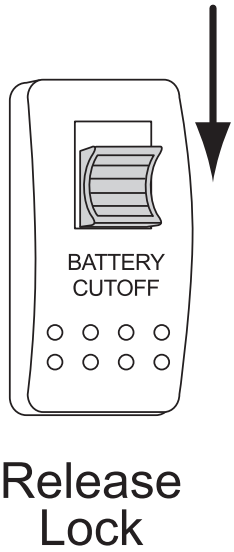


**To Turn the Interior Power On or Off:**

- Simultaneously push the spring-loaded lock down and push the switch.

**CAUTION: To avoid flash damage to electrical contacts, turn off the interior lighting before activating the battery cut-off switch.**

## SHORE POWER HOOK-UP

The power requirement for the motorhome is 50 Amp 120/240 Volt AC single phase. The shore cord is stored in the rear roadside compartment. If 50 Amp shore power service is available, all that is necessary is to connect the supplied shore power cord. If 50 Amp service is not available, electrical adapters will be required.

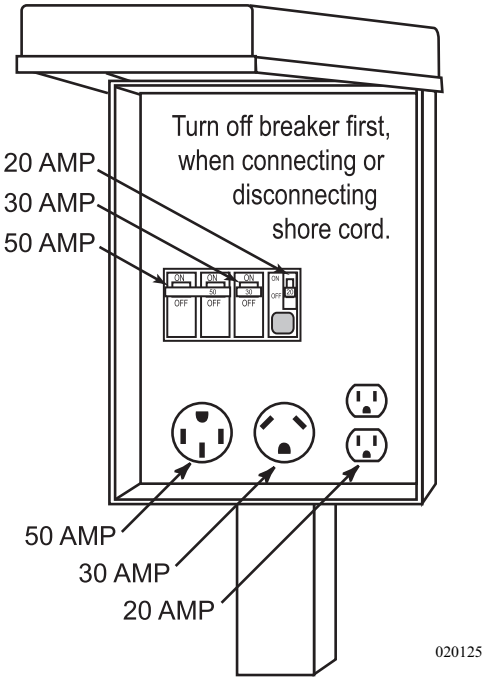


**CAUTION: Avoid flash damage to the electrical system contacts. Before plugging the motorhome into shore power, starting the generator or using the inverter make sure all the appliances are off.**

**WARNING: Keep fingers away from metal contacts of the shore plug end. Do Not stand in water when making electrical connections. Serious electrical shock and personal injury can occur. To avoid the risk of an electrical shock, turn the circuit breaker off for the power supply outlet before making the shore power connection.**

**CAUTION: Do not remove cover from shore power supply to troubleshoot electricity to the motorhome. Serious personal injury or death may occur. If there is no power to the motorhome inform the park manager. It is the park manager's responsibility to fix any problems with the park's shore hook up.**

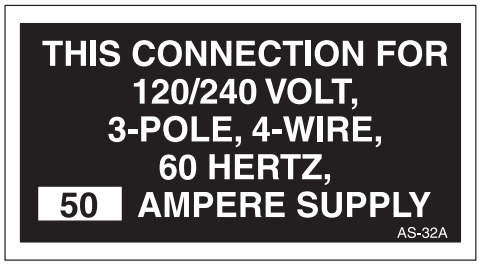


060203

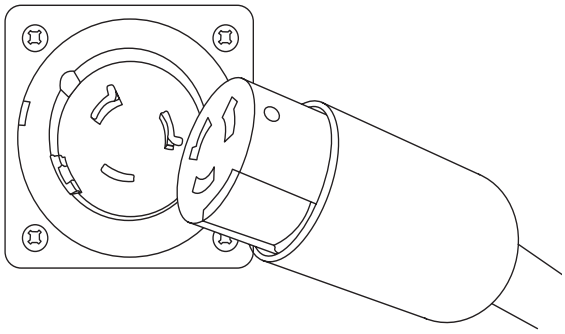

060202

**Plugging in the Shore Cord:**

- Located in the roadside compartment is the shore power cord.
- Unscrew the deck plate and insert the end of the shore cable through the deck plate.
- Align cord end with socket terminals. Insert cord end into socket and rotate end clockwise ¼ turn locking cord end into socket.
- If 50 Amp service is not available, install the proper electrical adapter(s) to the opposite end of the cord.
- Always turn off the shore power breaker to the power supply outlet before connecting or disconnecting the shore cord. This will prevent an accidental shock and flashing of electrical contacts.
- Make the connection to the outlet and turn the shore power breaker on. The transfer switch should make an audible click.
- Go inside the motorhome and check the AC voltage, using the Aladdin™ screen to verify proper voltage.

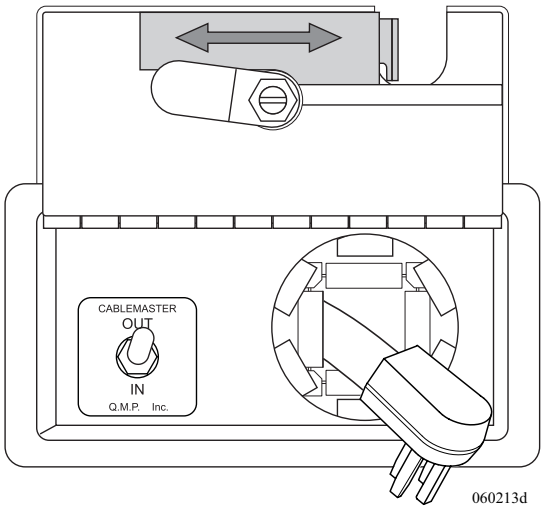


060213d

**Plugging in the Shore Cord with Cord Reel Option:**

- Located in the roadside compartment is the shore power cord.
- Locate the power cord switch. Extend the cable by placing the switch to the Out position. Extend a sufficient amount of cable to reach the power supply, then turn the switch off. If 50 Amp service is not available, install the proper electrical adapter(s) to the cord.
- Always turn off the shore power breaker to the power supply before connecting or disconnecting the shore cord. This will prevent an accidental shock and flashing of electrical contacts.
- After the connection is made, turn the shore power breaker on. The transfer switch should make an audible click.
- Go inside the motorhome and check the AC voltage using the Aladdin™ screen.

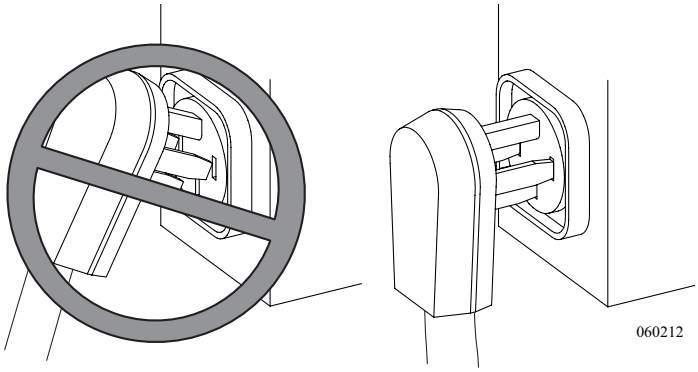

060212

Incorrect Method

Correct Method

After verifying proper voltage, wait approximately one minute for the inverter to "stabilize" charging of the batteries before starting air conditioners or other large AC loads. In the instance 50 Amp service is not available, use caution when operating appliances to avoid overloading the supplied shore service breaker. Operate appliances and outlets in sequence rather than all at the same time.

**CAUTION: The shore power requirement of an All Electric motorhome, in most situations, will exceed 20 Amp shore power service. It is strongly recommended to hook to 30 Amp service or start the generator.**

**CAUTION: If shore power service is limited to 15 or 20 Amps, use of light duty extension cords and electrical adapters will create a voltage loss through the cord and at each electrical connection. Line voltage loss and the resistance at each electrical connection can be a hazardous combination. Damage to sensitive electronic equipment may result!**

**CAUTION: Avoid the risk of electrical shock or component damage by disconnecting from shore power during electrical storm activity. Use the inverter or start the generator if AC power is needed.**

**NOTE: Shown are the three types of shore power outlets most commonly used.**

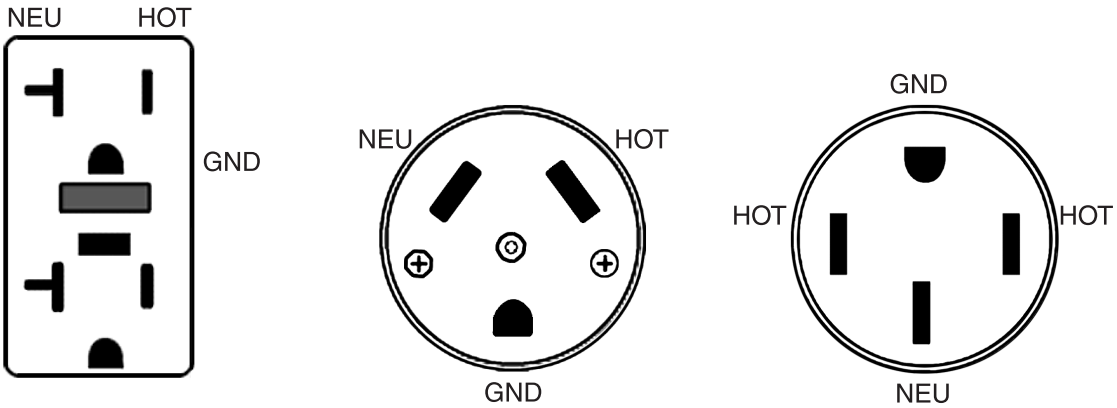


15-20 AMP
120 VOLT

30 AMP
120 VOLT

50 AMP
220 VOLT

060121

**Power Supply:**

Different amperage supplies vary greatly in the amount of available current.

- The continuous amount of current through a breaker or fuse is only 80% of its rated capacity.
- 50 Amp 220 Volt AC shore power service consists of two power supply conductors, a neutral and a safety ground. The 50 Amp breaker simultaneously limits each power supply conductor to no more than a short-term maximum of 50 Amps for each conductor. The 50 Amp 220 Volt service actually provides 80 continuous amps.
- Use care when hooked to anything less than 50 Amp shore service. Shore power service less than 50 Amps consists of one power supply conductor, a neutral and a safety ground. 30 Amp shore service is limited to 24 continuous amps. 20 Amp shore service is limited to 16 continuous amps.

**Electrical Adapters:**

There are many different electrical adapters available to suit a variety of needs. Only UL approved adapters should be used. The most common adapter is a 50-30 Amp adapter. The type of connector adapts the 50 Amp shore cord to a 30 Amp shore power outlet. Another common adapter is the 30-20 Amp adapter. Always install the adapter to the cord prior to making the connection to the outlet.

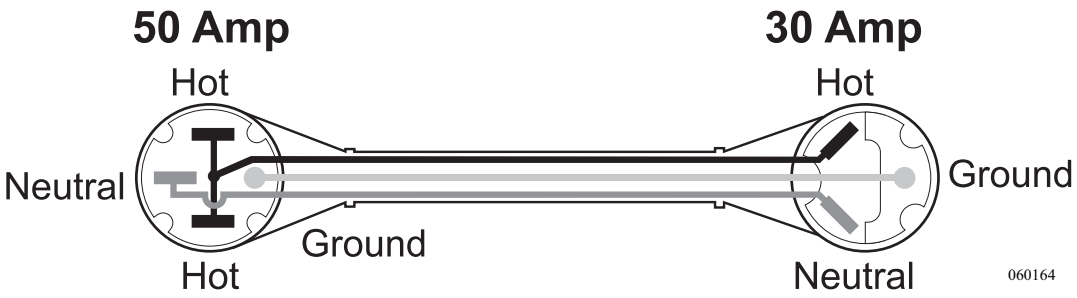


*Typical 50-30 Amp Adapter.*

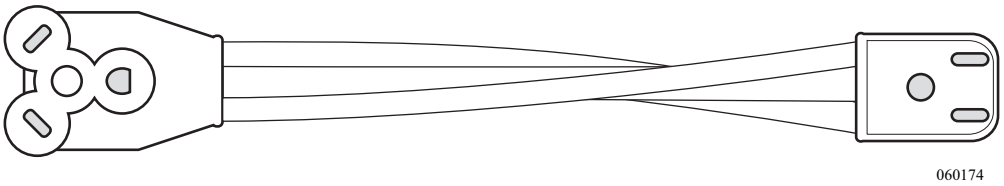


*30-20 Amp adapter. Adapts the 30 Amp shore cord to a 20 Amp shore power outlet.*

## Power Cord Reel

The power cord reel is a 12 Volt DC motorized assembly that mechanically coils and stows the shore cord. The 50 Amp power cord reel is located in the roadside compartment of the motorhome. The other end of the cable power cord is wired directly to the transfer switch. The motor control switch is labeled **IN** and **OUT**. This switch operates the 12 Volt DC motor extending or retracting the cable.

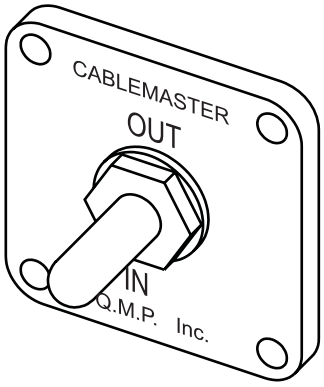


060043

When extending or retracting the power cord, turn the switch to the direction desired. Assist the cord, following the direction of travel. Extend only as much power cord as necessary to reach the shore power outlet. When the cord is connected to shore power, the cord should not be taut but slightly slack.

**Maintenance:**

When only a short section of the shore power cable is frequently used the cable may coil sharper than normal, causing the cable to kink. To relieve this condition, routinely extend the cable full distance. Straighten the power cable on the ground. It is important the cable remains clean. Accumulated dust and dirt on the cable may cause difficulty in retracting the cord. After cleaning and straightening the cable, allow the cablemaster to retract the cable into the motorhome.

Check all AC and DC wiring connections at least once a year. Be sure they are secure and free of corrosion. Check the neoprene covers on the in-limit switch and the power switch to be sure they are free of cracks or fracture.

**WARNING: Before working on the electrical system, disconnect from shore power and turn off the inverter/ charger. Disconnect the negative 12 Volt DC battery cables at the inverter. Remove rings, metal watchbands and other metal jewelry before working around batteries and connectors. Use caution when working with metal tools. If the tool contacts a battery terminal or metal connected to it, a short circuit could occur causing personal injury, explosion or fire.**

## *AC Volt & Amp Meter*

**The Aladdin System will display many AC and DC electrical values:**

- AC voltage, amperage and frequency values when hooked to shore power or operating from the generator.
- House Battery DC voltage and amperage.
- Solar panel charge voltage and amperage.

| COACH ELECTRICAL STATUS | | |
|---|---|---|
| AC LEG 1 | VOLTS | XXXXXXX |
| | AMPS | XXXXXXX |
| | FREQUENCY | XXXXXXX |
| AC LEG 2 | VOLTS | XXXXXXX |
| | AMPS | XXXXXXX |
| | FREQUENCY | XXXXXXX |
| BATTERY | VOLTS | XXXXXXX |
| | AMPS | XXXXXXX |
| SOLAR | VOLTS | XXXXXXX |
| | AMPS | XXXXXXX |

020198

The Aladdin System monitors the two "hot" supply lines of the 240 Volt system. Voltage, amperage and frequency values are measured at the transfer switch. After hooking to shore power check that incoming electrical values are satisfactory. Monitor current consumption when using appliances and hooked to anything less than 50 Amp service. AC values will read "Off" when using the inverter for AC power.

Use the Aladdin System to avoid low or high voltage operation or to monitor DC current consumption when dry camping.

**NOTE: When operating from the inverter, use the inverter remote display to monitor AC voltage and amperage.**

## TRANSFER SWITCH

The transfer switch uses electronics to monitor voltage input for high or low voltage conditions. If the incoming voltage from the generator or shore power exceeds 138 Volts, or if voltage drops below 105 Volts, the transfer switch automatically disconnects the electrical service. This helps prevent damage to voltage sensitive equipment that can occur.

**Surge Protector:**

A surge protector with line sensor mounts to the transfer switch. The surge protector prevents the motorhome from receiving a sudden "spike" of incoming voltage. This may be from a lightning strike to the electrical utility during storm activity.

When hooked to shore power or operating from the generator, a set of indicator lights on surge protector activates to indicate the surge protector is operating correctly or is damaged. Damage to the electrical system may have occurred.

Disconnect from shore power, stop the generator and **do not** use the inverter. Replace the surge protector and have the electrical system inspected by a qualified electrical service technician.

Surge Protector.Tif

**NOTE: To prevent damage to the transfer switch contacts do not have appliances on or AC loads plugged into outlets when hooking to shore power or starting the generator. If voltage from shore power is below or above acceptable levels, start the generator and disconnect from shore service until shore power supply voltage stabilizes.**

Transferswitch.tif

## GENERATOR - 240 AC

The generator is located in the front compartment of the motorhome. The generator can be started from the following locations:

- The generator remote switch on the dash.
- The generator control panel located on the generator.
- The bedroom control panel.
- The inverter panel.

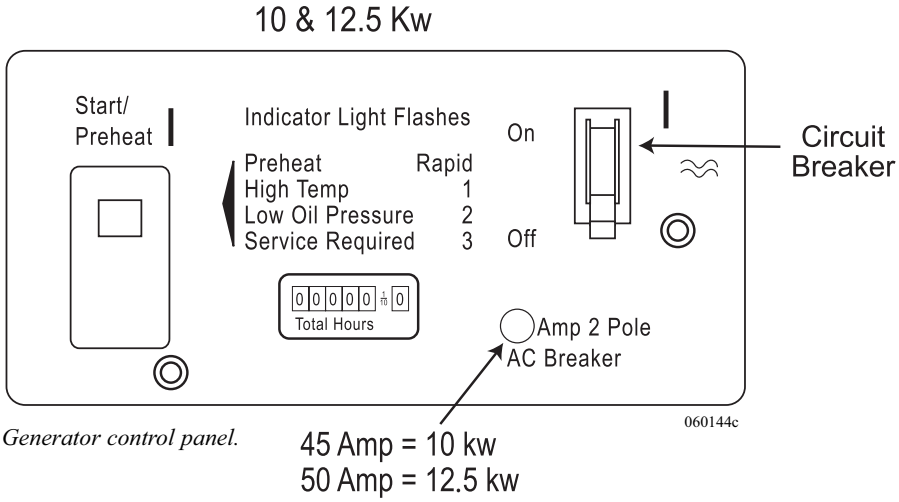

*Generator control panel.*

## Pre-start Checks

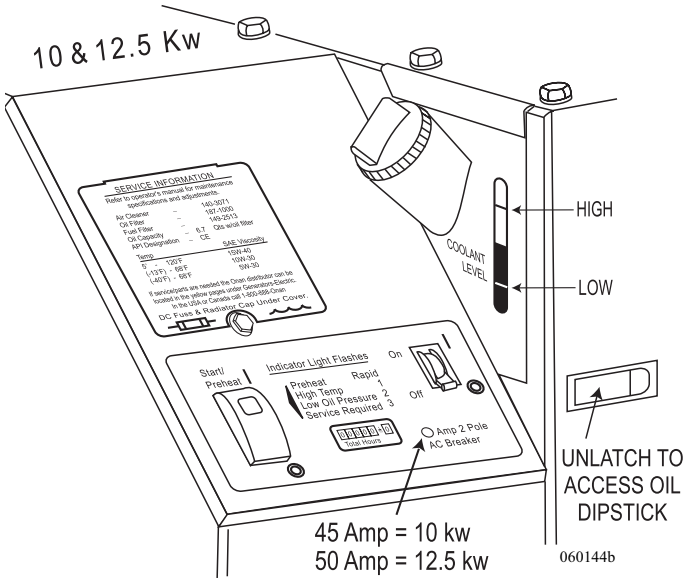

020146

Prior to the first start of the day perform a general **inspection** including oil and coolant levels. Keep a maintenance log on number of hours in operation since the last service. Perform any service or maintenance that may be due.

**Before Starting the Generator:**

- Clear people and animals from hazards of electrical shock and moving parts.
- All appliances and other large AC electrical loads must be off.
- Check oil and antifreeze levels.

**NOTE: Diesel models may require priming. To prime hold control switch in the OFF position. Repeat if necessary. The diesel generator fuel pick-up tube is cut to approximately 1/4 tank so as not to run the main engine out of fuel.**

## Starting the Generator

Push and hold the control switch in **START** position until the generator starts. Release switch. On diesel models the control switch may flash up to 15 seconds, indicating engine preheat.

**WARNING: Excessive cranking can overheat and damage the starter motor. Do not crank the engine more than 30 seconds at any one time. Wait at least two minutes before resuming. If the generator fails to start refer to the manufacturer's manual.**

**WARNING: When the motorhome is parked, position the dash air conditioner vent control in the OFF position to prevent exhaust gases from entering the motorhome. The engine exhaust contains carbon monoxide, which is an odorless and colorless gas. Carbon monoxide is poisonous and can cause unconsciousness and/or death. Inspect the exhaust system thoroughly before starting the generator. Do not block the exhaust pipe or situate the motorhome where the exhaust may accumulate either outside, underneath, or inside the motorhome or any nearby vehicles. Operate the generator only when safe dispersion of exhaust can be assured. Monitor the outside conditions to be sure that the exhaust continues to disperse safely.**

**WARNING: When parking near high grass, be sure that the hot exhaust does not come into contact with the grass, it could be a fire hazard. Hot exhaust pipe or hot exhaust gases can ignite the grass.**

**CAUTION: An exhaust extension adds weight and stresses the generator exhaust system. Damage to the exhaust piping or exhaust manifold can result allowing Carbon Monoxide gases to accumulate under or leak into the motorhome.**

### *Stopping the Generator*

Turn off the appliances and disconnect other AC loads being used. Allow the generator to run unloaded for at least one minute before shutdown to allow the engine to cool. Momentarily push the control switch to the **STOP** position. Release the switch.

### *Powering the Equipment*

The AC output of the generator powers the motorhome air conditioners, the AC inverter/converter charger, all appliances and items plugged into the electrical outlets of the motorhome. The number of electrical appliances that can be operated at any given time depends upon how much power is available from the generator. If the generator is "overloaded" or a short circuit causes "over current," either the generator will shut down or the circuit breaker will trip. If power consumption, in total, exceeds the generator power output, compensation for temperature and elevation may be necessary. Operate some appliances in sequence rather than all at the same time.

**NOTE: The generator may shut down when it is loaded nearly to full power and an air conditioner (or other large motor load) cycles on. For a brief moment during start up an electric motor can draw up to three times the rated power. For this reason it may be necessary to operate some appliances in sequence when air conditioners or other large motor loads are on.**

It is important to remember that air density decreases as altitude increases, causing the generator engine power to decrease. Power decreases at approximately 3% of the rated power each 1,000 feet (305M) of increase in elevation above sea level. It may be necessary to operate fewer appliances at the same time when the camping location is at a higher elevation. For example: 7500 watt generator at 5,000 ft. = 6375 watts net. Temperature also affects maximum output power. For example: at 120º a 7500 watt generator produces 6000 watts net.

**INFORMATION: The diesel generator may shut down for other reasons beside "overloads." A blink code may appear on the control switch. Refer to the manufacturer's manual to obtain an explanation of the codes.**

## Generator Fuel

When refueling there is always a possibility the fuel may be contaminated. Contamination of fuel affects the performance of the generator. Diesel fuel may contain water or a microbe growth (black slime). Any contamination of fuel greatly reduces the total output of the generator and may cause erratic AC output.

**NOTE: The motorhome manufacturer does not cover damage to the generator caused by fuel contamination, or to appliances due to erratic AC voltage.**

| AVERAGE FUEL CONSUMPTION | DIESEL 10,000 WATTS (gal./hr.) |
|---|---|
| No Load | 0.1 |
| Half Load | 0.7 |
| Full Load | 1.3 |

.

## Resetting the Circuit Breaker

If a circuit breaker trips in the main AC breaker panel, or on the generator control panel, there may be a short circuit or too much load.

**NOTE: The generator will continue to run after a circuit breaker trips.**

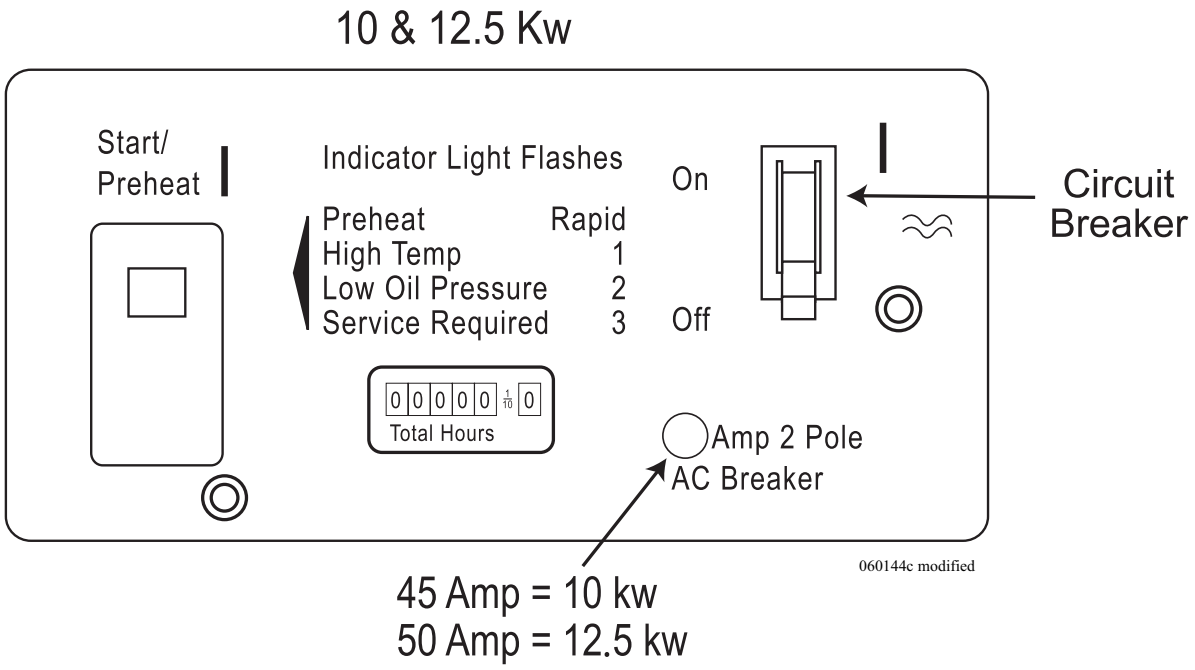

If a circuit breaker trips, disconnect or turn off as many loads as possible. To reset the circuit breaker, switch the circuit breaker to **OFF**; then switch back to **ON** to reconnect the circuit. If the circuit breaker immediately trips, the electrical distribution system has a short or the circuit breaker is faulty. Call a qualified electrician. If the circuit breaker does not trip, reconnect a combination of loads that will not overload the generator or cause the circuit breaker to trip again. Remember to compensate for elevation and temperature changes when reconnecting loads.

**NOTE: An appliance or load may have a short if it causes a circuit breaker to trip after reconnection. DO NOT continue to reset breaker. Have the problem corrected before resuming operation.**

### *Generator Exercise*

If use of the generator is infrequent, "exercise" the generator once a month by operating it at approximately half the maximum rated output for two hours. This "exercise" will help promote better starting, more reliable operation and longer engine life. This procedure drives off moisture, relubricates the internal engine parts, replaces the old stale fuel with a fresh supply, and also promotes removing oxides from the electrical switches and contacts.

**NOTE: Avoid short run periods of the generator set. Run the generator set under a load for a minimum of one-half hour.**

## GENERATOR - AUTO GEN START (RC7 GS)



The house batteries operate most of the interior lighting and most appliances. As the house battery power is consumed, the inverter can be programmed to automatically start and stop the generator to keep up with the drain on the house batteries. A wide field of parameters can be programmed for generator start and stop points. These settings listed below are an average that should work in most situations. The Automatic Generator Start feature can be programmed when hooked to shore power, operating from the generator or operating off the batteries.

**CAUTION: Disable the automatic generator start program before refueling, having the generator serviced or when storing the motorhome.**

**INFORMATION: These instructions are only a guide and not a replacement for the Inverter Owner's Manual. Please refer to Inverter Manual for in-depth information.**

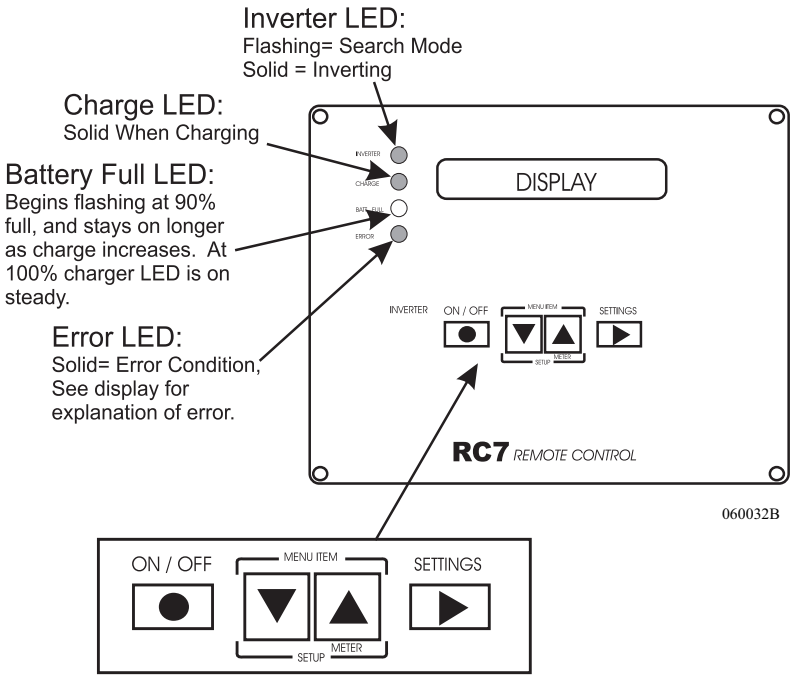


**Entering the Setup Mode:**

1. Press the **Setup** (**Up** and **Down**) **buttons** simultaneously for five seconds then release the buttons. After entering **Setup** mode, **Search Sense** should display. If this is not displayed, press the **Setup buttons** again.
2. Under the **Search Sense** heading, **Defeat** should display. If not, press the **Settings button** until the inverter is set to **Defeat** in the **Search Sense** heading.
3. Press the **Down button** once, **Auto LBCO** will display. This should be set to **ON**. If not, press the **Settings button** once. **Auto LBCO** should now be **ON**.
4. Continue through the rest of the list using the **Down button**. Use the **Settings button** to change the value. When the program is set it may be necessary to slightly adjust the program profile to fit a particular need. Only personal experience, habits and time will tell.

**Settings:**

- Search Sense = Defeat.
- Auto LBCO = On.
- Battery Capacity = 500 Amp standard. 1000 Amp All Electric.
- Battery Type = Select Liquid Lead Acid.
- Charge Rate = 100%.
- Shore Power Amps = 30 Amp.
- RC7 GS Setup = Personal preference on this. Last key will continuously display the last screen viewed. In **Power Saver** mode, the last screen will display for a short period of time then the screen will go blank.
- LCD Contrast = Max Contrast. The screen will fade with each successive contrast selection. Continue to press the **Settings button** until "**Max Contrast**" appears.
- External Shunt = Select None.
- Fuel Gauge Cutout = 11.8 Volts DC.

The next group of settings is when, and under what conditions, the generator will start and stop. The clock must first be set before the inverter will allow programming changes to the rest of the menu headings. Scroll down to the last menu heading Set Clock.

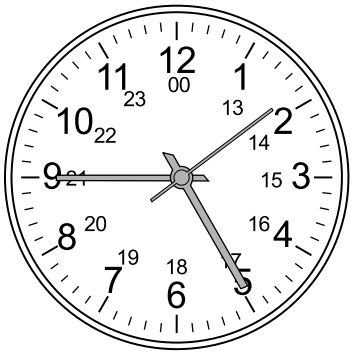


030970

- When in the Clock Set Menu, the hours and minutes will alternately flash every eight seconds. Use the Settings button to advance the flashing hours or minutes. The clock is a 24 hour clock. If the display reads 00:01, it is 12:01 a.m. If the clock reads 13:00, it is 1:00 p.m.

**NOTE: The clock time and the generator start/stop programming will be erased whenever the main battery disconnects are turned off.**

After setting the clock, press the **UP** button to scroll back up to the Menu item Generator Start. These last items set the conditions at which the generator starts and stops.

- Generator Start = 50% SOC.
- Generator Stop = 90% SOC.
- Begin Generator Quiet Time = This is the time when the generator will stop operation. 19:00 is 7:00 PM.
- End Generator Quiet Time = This is the time when the generator can start. 09:00 is 9:00 AM.
- Select Generator = Onan Quiet Diesel.

The programming is now set for Automatic Generator Start. Exit programming mode by simultaneously pressing the **Set-up** buttons. Waiting for AC, Inverting or a charge status Bulk, Absorb or Float should now be displayed.

When the generator starts from the Auto Start program it will automatically stop at 90% state of charge. If the generator started from the Auto Start program and has not shutdown by Gen Quiet Time, the inverter will shut the generator off.

A **RED** error light flashes and the display will indicate Gen Quiet Time. The fault alarm will sound for a short time and can be silenced by pushing the **Up** or **Down** button.

**NOTE: To start the generator manually after the Automatic Generator Start feature is enabled, it must be started from the RC7 GS remote. If the generator is started manually from any remote switch other than the RC7 GS remote while the Automatic Generator Start feature is enabled, the inverter may shut the generator off due to the parameters set.**

**Starting the Generator Manually:**

- Use the RC7 GS remote to start or stop the generator when the Automatic Generator Start feature is enabled.
- Press the **UP** or **DOWN** arrow (while in the main menu) until Generator Start/Stop: Press (**ON/OFF**) is displayed.
- Press and hold the **ON/OFF** button until the generator starts. The display will indicate the generator was started manually. Use the **ON/OFF** button or any of the generator start/stop switches to stop the generator.

**To Disable Automatic Generator Operation:**

- Set the generator Start and Stop points back to Manual **ON/OFF** or switch off the house and chassis main battery disconnects to erase the clock time and generator start/stop programming.

## INVERTER

Use the inverter when shore power is not available and the generator is not going to be used as the secondary AC power source option. This will supply silent AC power to most receptacles, the television and microwave. It is important to remember that use of the inverter will greatly increase house battery power consumption. Turn off the inverter when not in use to conserve house battery power.

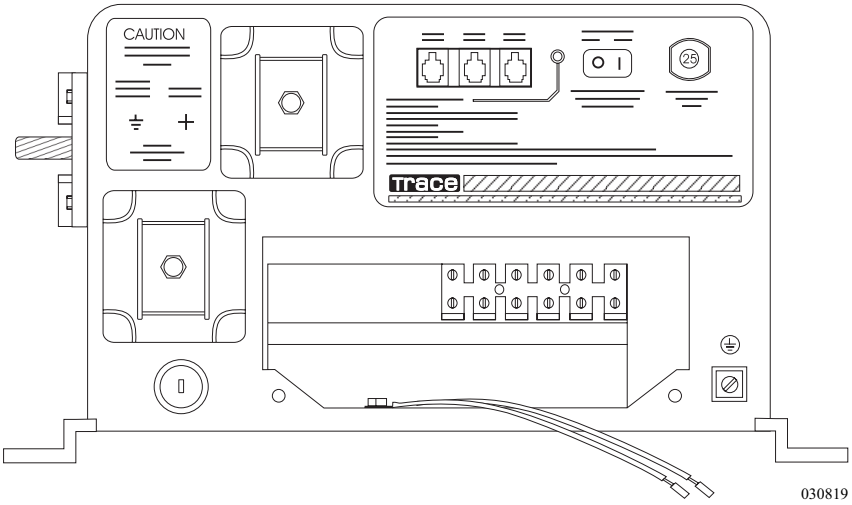


**To turn the inverter On or Off:**

- Momentarily press the blue **ON/OFF** button on the inverter remote.

**NOTE: This information is not a replacement for the inverter manual. Consult the Inverter Owner's Manual for complete instructions.**

The inverter is very comprehensive with many features. The RC7 GS remote control is used to change or add features and set variable parameters. The remote may also be used to start and stop the generator.

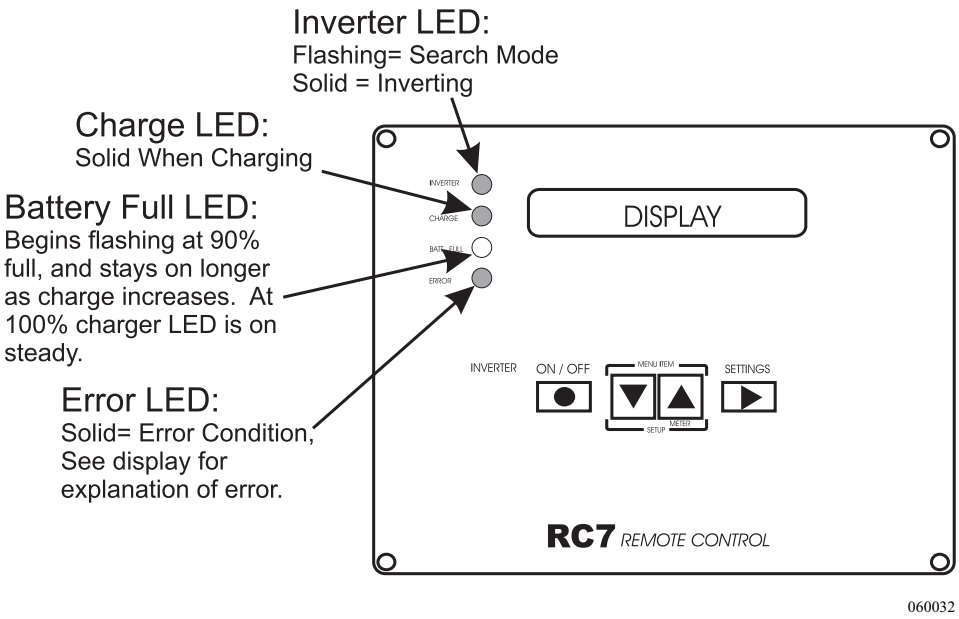


**Some available features include:**

- Automatic generator start.
- Fully adjustable battery charge rates.
- Adjustable fuel gauge cut-out.
- Adjustable charging curves for different battery types.
- Adjustable power sharing.
- Meters Menu.

The remote control liquid crystal display (LCD) and light emitting diodes (LED) are used for operation status conditions. The LED lights give inverter status, charge status, battery condition and error indications at a glance. The LCD screen displays charging cycle status, various meter readings, automatic generator operation status, programming field and error messages.

The inverter **ON/OFF** button turns the inverter on or off and can be used to start or stop the generator. The up or down arrows are used to scroll up or down through the operations field or meters field. The up arrow is used to toggle between operations and meter fields. Pressing the up and down arrows will simultaneously access the programming field. The settings button is used to set or scroll through a particular programming field.

**NOTE: The main switch on the inverter is to remain ON.**

## Stand-By Operation

The inverter can be set-up for stand-by power operation. When hooked to shore power, or operating from the generator with Stand-by mode enabled, the inverter will automatically provide AC power if shore power discontinues or the generator is turned off. When AC power resumes the inverter will automatically return to "stand-by" mode and begin charging the batteries.

**To Enable Stand-by Mode:**

- Momentarily press the blue "on/off" button while the motorhome is hooked to shore power or operating from the generator. The Status light on the remote panel will blink slowly. Battery charging is not affected in Stand-by mode.

**NOTE: Disable stand-by operation when not in use. House battery power may accidentally be consumed, causing the house batteries to be drained.**

## Battery Charging with the Inverter

Whether hooked to shore power or operating from the generator, the internal battery charger of the inverter will automatically charge the batteries when AC power is supplied to the input terminals of the inverter. The time it takes to charge the batteries to a full state of charge varies greatly. It can take several hours or even days depending on the inverter set-up parameters and actual state of charge of the batteries.

The inverter uses a three stage charging cycle. The first stage is "bulk" charge. The bulk charge will bring the DC voltage up high, initially between 14.2 - 14.6 Volts, actual bulk charge voltage depends on which battery type has been selected in the programming menu. The bulk charge cycle is controlled by voltage and current. The length of time the inverter is in the bulk charge cycle will vary with the state of charge of the batteries. The second stage is the "absorb" cycle. The battery voltage in the absorb cycle is the same as the bulk charge cycle between 14.2 - 14.6 Volts. The length of the absorb cycle is a timed event determined by the inverter. The final charging stage is the "float" charge cycle. Approximately 80% of the charging cycle has been completed by this time. The float charge voltage is generally around 13.3 - 13.7 Volts. The last 20% of the charge cycle typically takes the most amount of time.

**NOTE: The inverter will charge the batteries with AC power applied regardless of remote status.**

## Battery Temperature Sensor

The battery temperature sensor is affixed to one of the house batteries, measuring the temperature of the battery and sending this information to the inverter. When the battery temperature rises the inverter will decrease charge voltage to prevent boiling the batteries. When the temperature cools the inverter will raise charge voltage. Voltage compensation with temperature variation is necessary to keep charge voltage at optimum values. If the BTS cord is unplugged from the inverter, the inverter will use a temperature default setting of 77º F/25º C reference point.

060085b

## Pass-Through AC Power

Inside the inverter is a double pole "pass-through" relay that trips when AC power is supplied to the input terminals. This will transfer AC power through the inverter to the sub breaker panel in the bedroom. The sub breaker panel supplies AC power to most outlets and appliances. When the inverter receives AC power, the internal battery charger will "ramp up" battery charging voltage. After approximately 20 seconds, the relay engages allowing AC power to pass through the inverter to the sub-panel.

## Main Menu Display

There are several items in the main menu. The main menu displays the operating status of the inverter. This is the primary screen of the RC7 GS remote. Use the **Up** or **Down** arrows to scroll the main menu.

**Waiting for AC:**
System inactive waiting for AC power to be supplied.

**Inverting:**
Unit is inverting.

**Charging Cycle Status:**
Bulk, Absorb or Float mode.

**Battery State of Charge:**
Based on the Fuel Gauge Cutout setting. May be displayed in percentages or as a fuel gauge.

**Time Left To Run:**
This evaluates the battery reserve capacity at current operating load based on the Fuel Gauge Cutout and Battery Bank Capacity settings.

**Time Left To Charge:**
Estimated time left to charge batteries to full state of charge based on Fuel Gauge Cutout and Battery Bank Capacity settings with current battery voltage.

**Generator Start/Stop:**
Use inverter ON/OFF button to remotely start the generator or to override automatic generator start feature for manual operation. This feature is available to use without altering automatic generator start programming.

## Meters Menu

The meters menu displays specific numeric accounts of the inverter.

**To Access the Meters Menu:**

- Press and hold the **UP** arrow button for five seconds. The RC7 GS remote will beep. Release the button. **Avg Shunt Amps** should be displayed. Use the **Up** or **Down arrows** to scroll the field. This field area includes:

**Avg Shunt Amps:**
Measures the DC current either charging or discharging. Most of the house DC current usage is monitored by the inverter.

**Battery Voltage:**
Monitors the house battery voltage.

**Inv/Chg Current:**
Measures the AC current usage when the inverter is charging.

**Inverter Output VAC:**
Monitors the AC output voltage while the unit is inverting.

**AC Input Amps:**
The inverter uses a double pole pass through relay, measuring current consumption through the Hot 1 terminal.

**Battery Temperature:**
Monitors counts of the battery temperature sensor (BTS). Counts are measured impulses which the inverter uses to calculate the battery case temperature. The charging voltage is adjusted to optimum values.

**Xformer Temp:**
Monitors the transformer temperature which is measured in counts. Higher count readings are registering lower temperatures.

**FET Temp:**
Monitors the Field Effect Transistor temperature which is measured in counts.

**Est Batt Cap:**
Estimates the battery bank capacity in amp hours (Ahrs). Charging and discharging on a cyclic basis will give an approximate indication of the battery capacity in amp hours. Observe the reading and multiply by eight to obtain an approximate reserve capacity. This figure is only approximate and will change with cyclic use.

The factory settings in the inverter will work in most situations. Before changing any program values consult the Inverter Manual for complete details.

**To enter programming mode:**

- Press and hold the Set-Up buttons (**UP** and **DOWN** arrows) for five seconds. The RC7 GS remote will beep.
- Release the buttons. The programming mode has been entered when the Search Sense is displayed.
- Use the Menu buttons (**UP** and **DOWN** arrows) to scroll though available field settings.
- Use the Settings button (right-pointing arrow) to scroll through available settings for selected field.

**To exit the programming mode:**

- Allow 20 seconds to elapse from the time the last key is pressed. Program changes are then accepted by the inverter in non-volatile memory.
- Momentarily pressing the set-up buttons (**UP** and **DOWN** arrows) exits the programming menu. Program changes are automatically saved in non-volatile memory.
- The inverter is now ready to use. "Waiting for AC" will be displayed or if any program changes were made with AC applied, one of the three stages of the charge cycle will be displayed.

**NOTE: Non-volatile memory is a permanent programming change accepted by the inverter. Turning the main battery disconnect switches off does not affect programming changes. Only the inverter clock time and automatic generator start/stop programming will be erased.**

**Search Sense:**

The inverter searches for an AC load. For example: While inverting, AC loads of various amperage may be applied. These loads may range from a few watts to several amps. Search Sense is the cut-in point which the inverter will exit the "sleep mode" and start inverting at a standard output voltage. The Defeat setting allows the inverter to be at a constant standard output voltage. When changing the Search Sense value AC loads must be evaluated for proper inverter operation.

**Auto LBCO:**

The Automatic Low Battery Cut-off may be turned on or off. These settings allow the inverter to use available DC voltage to a set value while inverting. Turning the LBCO **ON** stops the inverter when the battery voltage drops to 10.5 Volts DC. Turning the LBCO **OFF** stops the inverter when the battery voltage drops to 8.5 Volts DC. This leaves the batteries fully discharged, but not completely dead.

**Battery Capacity:**

The battery bank capacity is adjustable in Ahrs (amp hours). These settings change charging curves and the length of time of the charging cycles. The range is from 125 Ahrs to 1,000 Ahrs. Select the closest Amp Hour rating for the house battery bank capacity. The auto setting will "learn" the battery bank size by user characteristics. For example: Discharging and recharging the batteries on a cyclic basis. The inverter takes several charging cycles to "learn" an individual battery bank size. When the main battery disconnects have been turned off, the "learning" curve is erased.

**Battery Type:**

Many types of batteries with different chemical compositions are available. Different chemical types require different charging characteristics at different voltages.

**Selection of available battery types are:**

- AGM (Absorb Glass Matte)
- Gel Cell
- Liquid Lead Acid

**Charge Rate:**

Charge rate is adjustable from 10 to 100%. This feature may be used in many different ways. Selecting a lower percentage charge rate lowers the inverter AC battery charger's current consumption. It will take longer to charge batteries but will leave user a few extra AC amps when operating from a limited AC power source.

**Shore Power Amps:**

This is a load shedding feature of the battery charger in the inverter. For example: Shore Power amps set to 30 Amps will decrease the AC current available for the internal battery charger's use, as pass through AC current value approaches 30 Amps. Lowering shore power amps will limit the available AC current for the internal battery charger's use. This is adjustable from 5 to 30 Amps, in 5 Amp increments.

**RC7 GS Setup:**

This option allows the user to select the desired screen display. The Last Key will leave the menu active with the last status viewed on the display. The Rolling Display will continue to scroll through the active menu status display. Power Saver allows the display to "sleep" after viewing the status. Touch any key to "awaken" the RC7 GS remote, then press the desired key.

**LCD Contrast:**

This changes the display screen contrast. Six settings are available. Lighter contrast settings may leave the screen difficult to see in a bright atmosphere.

**External Shunt:**

The inverter monitors both AC and DC current values, whether charging or discharging (figures are approximate), by using internal or external shunts. A shunt monitors partial current consumption, allowing the majority of current to pass on heavier conductors. Programming shunt selection affects which shunt the inverter is using to monitor DC current values. Single inverter systems use their internal shunt to monitor system DC current values. When programming single inverter systems select External Shunt None. Dual inverter systems use an external shunt to monitor system current values. When programming the shunt selection of a dual inverter system, the master inverter is programmed by the remote installed in the monitor panel. The master inverter will be programmed as External Shunt This Inverter. The slave inverter will be programmed as External Shunt Other Inverter.

**Fuel Gauge Cutout:**

Battery chemistries and types have different static voltage readings at different states of charge. The battery voltage may be used to determine an approximate state of charge for that battery type and chemistry. The Fuel Gauge Cutout voltage is a reference point the inverter uses to determine a battery with no reserve capacity amp hours remaining. Changing the value of the Fuel Gauge Cutout will affect the fuel meter, automatic generator start and stop points if set by SOC (state of charge) and time left to run or charge. The Fuel Gauge will read 0 when the Fuel Gauge Cutout pre-programmed voltage reaches 50% SOC.

**NOTE: The remaining field items are used to program the Automatic Generator Start parameters.**

The house batteries operate most of the interior lighting and most appliances. As the house battery power is consumed the reserve battery capacity diminishes. The inverter can be programmed to automatically start and stop the generator to keep up with the drain on the house batteries. All field reference points are house battery indications or conditions. A wide field of parameters may be chosen for the generator start and stop points. These points may be set in three categories:

1. House battery voltage.
2. State of charge (SOC). The Fuel Gauge Cut-out affects SOC.
3. Absorb or Float point of the charge cycle.

***Example:*** The inverter can be programmed to start the generator when house battery voltage falls to 11.4 Volts. As the battery voltage rises the inverter can be programmed to stop the generator when the house battery voltage obtains a percentage of state of charge (SOC). When selecting the field reference points make sure that the start and stop points are spread apart. It is possible to set parameters too close, causing short cycling of the generator. The menu will display the status of the generator while pending generator start. The generator must be operating correctly for proper automatic generator start and stop operation.

**NOTE: If the generator is started manually from any remote switch other than the RC7 GS remote while the automatic generator start feature is enabled, the generator may shut down due to field parameter settings.**

To override the automatic generator operation so that the generator may be operated manually, use the RC7 GS remote Inverter button to start or stop the generator. This is done using the **UP** or **DOWN** arrows while in the main menu until Generator Start/Stop: Press (**ON/OFF**) is displayed. The display will inform the user of the generator's status. The generator will need to be manually stopped using the **ON/OFF** button.

To enable the automatic generator operation, the programming mode must be entered. Before any field reference points can be established the clock must first be set. The clock set field is the last item in the programming menu.

**Clock Set:**

The clock is a 24 hour clock. If the display reads 00:01, it is 12:01 a.m.

If the clock reads 13:00, it is 1:00 p.m. The hours and minutes will flash, alternating every eight seconds. Use the Settings button to advance hours or minutes. The clock time and the generator start/stop programming will be erased whenever the main battery disconnects are turned off.

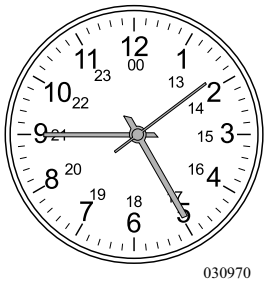


**Generator Start:**

Selecting a state of charge (SOC) generator start point is affected by the Fuel Gauge Cutout voltage setting. SOC start points are between 40 and 60%, or the generator may be programmed to start at a specified voltage. The manual start disables the automatic start.

**Generator Stop:**

Selecting a state of charge generator stop point is affected by the Fuel Gauge Cutout voltage setting. SOC stop points are between 90 and 99%, or the generator may be programmed to stop at the Absorb or Float point of charge cycle. The manual off disables the automatic stop.

**Begin Generator Quiet Time or End Generator Quiet Time:**

The automatic generator start feature may be programmed to operate only at certain times in the 24 hour clock period. For example: The user wants the automatic generator to start operation at 10:00 a.m. and stop operation at 7:00 p.m.

**End Generator Quiet Time:**

This is the time which the automatic generator operation is to begin. Using the example time above, the 24 hour clock would be set to 10:00 hrs.

**Begin Generator Quiet Time:**

This is the time which the automatic generator operation is set to stop. Using the example time above as a reference, the 24 hour clock would be set to 19:00 hrs.

**NOTE: If the generator started from the automatic start program and has not reached the automatic stop set point when quiet time begins, the generator will stop and "Gen Quiet Fault" will be displayed.**

**Select Generator:**

The inverter can operate more than one generator manufacturer type.
The selections are:

- Onan Quiet Diesel.
- Power Tech, two and three wire.
- Other 30-80 (reserved for future).

**To Disable Automatic Generator Operation:**

- Set Generator Start and Generator Stop points back to manual **ON/OFF** positions or switch off the house and chassis main battery disconnects to erase the clock time and generator start/stop programming.

## Re-booting the Inverter



The remote is used to program or turn on or off the inverter. The RC7 GS remote is a display only. All the programming information is retained in the inverter. If the inverter exhibits unusual symptoms, such as not responding to commands or displaying erroneous error conditions, re-booting the inverter may alleviate these symptoms.

**To Re-boot the Inverter:**

1. Remove AC power from the inverter by disconnecting shore power and/or shutting the generator off.
2. Turn the main switch on the inverter to the **OFF** position.
3. Switch house and chassis main battery disconnects to the **OFF** position.
4. Wait 30 seconds, this allows time for capacitors to discharge.
5. Switch house and chassis main battery disconnects to the **ON** position.
6. Turn the main switch on the inverter to the **ON** position.
7. Connect the shore power cord or start the generator.

## INVERTER-SINE WAVE (Optional)

Use the inverter when shore power is not available and not using the generator as a secondary power source. The inverter/charger has limited AC power output. It may be necessary to operate items in sequence rather than everything at once. Exercise care when using the inverter as an AC power source. Use the inverter sparingly as it quickly consumes house battery power.

When hooked to shore power, or operating from the generator, the inverter charges the house battery bank. The inverter will not automatically begin charging when hooked to shore power or operating the generator. A charge mode must be selected. The amount of time to charge the batteries to a full state of charge will vary with the depth of discharge when the charge cycle begins and any additional DC loads, such as lights.

**NOTE: The inverter is programmed at optimum values from the factory. Changing program values may adversely affect inverter performance.**

**To Turn ON the Inverter:**

- Press the red button on the inverter remote until the cursor scrolls to **On**.

**To Turn OFF the Inverter:**

- Press the red button on the inverter remote until the cursor scrolls to **Off**.

**To Begin Battery Charging:**

- Hook to shore power or start the generator.
- Press the red button on the inverter remote until the cursor indicates either **Chg** or **On**.

**NOTE: This is not a substitute for the owner's manual for the inverter. The inverter is comprehensive with many variables. Not all the programming details are covered.**

**NOTE: When hooked to shore power or operating the generator, press the red button to enter a charge mode by selecting "On" or "Chg" in the main menu. Failure to enter either mode will result in dead batteries.**

**Sine Wave Cycle Patterns:**

Inverters use battery power to make AC power. AC is Alternating Current, meaning the power signal alternates from positive to negative 60 (cycle) times a second. The term "sine wave" refers to the oscillating characteristic of the cycle. Inverter output cycles commonly come in two configurations Modified Sine Wave or True Sine Wave. The output cycle of a true sine wave inverter closely mimics the electrical wave pattern of a utility company or generator when observed with electronic equipment.

When AC power is available, the inverter will time itself to follow the incoming wave pattern. If the inverter is in stand-by operation when AC power discontinues, the inverter will immediately begin inverting and supply AC power to any loads.

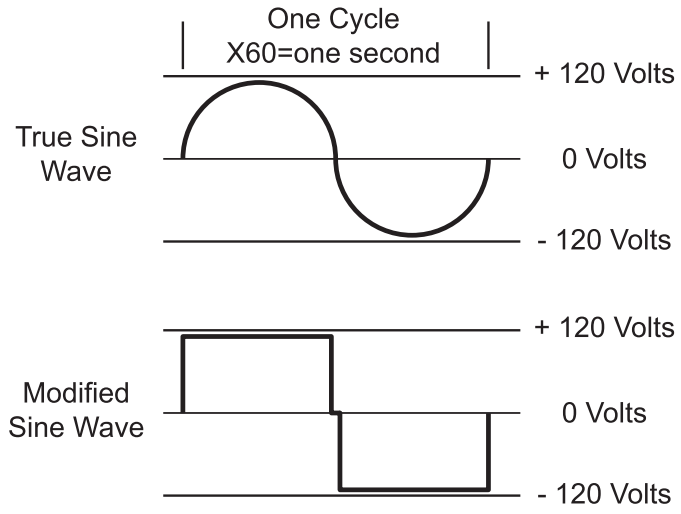


100171

## Remote

The sine wave inverter is fully programmable with many features. Use the remote control to change or add features and set variable parameters.

**Features of the Remote:**

- Fully adjustable battery charge rate.
- Adjustable charging curves for different battery types.
- Adjustable power sharing.
- Meters menu.
- Automatic generator start.
- Manual generator start.

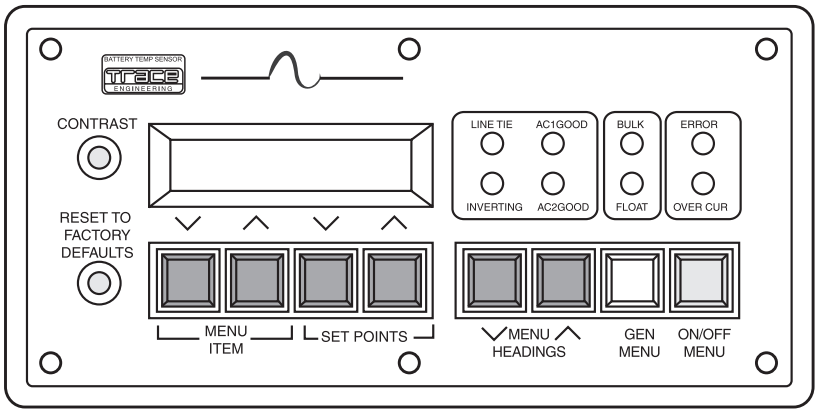


060111

The remote control uses a liquid crystal display (LCD) and light emitting diodes (LED) for operation status and programming. The LED lights give inverter status, AC input, charge status and error indications at a glance. The LCD screen displays various meter readings, programming field and error messages.

There are 14 main headings listed in the programming field, referred to as Menu Headings. Most of the Menu Headings have several sub-headings. Sub-headings are referred to as Menu Items.

**Navigating the Menu:**

- Pressing a **Menu Headings** button enters Menu Heading numbers **1** to **8**, referred to as the **User Menu**.
- Pressing the red and green buttons simultaneously will access Menu Heading numbers **9** to **20**, this is the **Setup Menu**.
- Use the **Menu Headings UP** or **DOWN** arrows to scroll the various main headings. A number in the lower right hand corner of the screen indicates the number of the heading.
- Use the **Menu Item UP** or **DOWN** arrows to scroll the various sub-heading of a Menu Heading.
- Use the **Set Points UP** or **DOWN** arrows to change the values of a subheading.

**NOTE: A complete description of the Menu Headings and Menu Items are listed in the inverter manual. Refer to the list when accessing the menu or changing program values.**

**Red Button:**

Press the **red** button to scroll the cursor. An underscore of the first letter indicates the selected mode. Press the **red** button to turn ON the inverter, battery charger or quickly exit programming mode and return to **Menu Heading** number **1**, **Inverter Mode**.

**OFF -** Turns the inverter and charger off. The charger will not activate in this mode when AC power is available.

**SRCH (Search) -** Turns the inverter on when a specified load, rated in watts, is applied to the inverter. Generally, there are enough loads to turn the inverter on in this setting.

**ON -** Turns the inverter on regardless of load. When AC is available the charger turns on and the inverter goes into **Stand-by** mode.

**CHG -** Turns the charger on when AC is available. If AC power discontinues, the charger will stop.

**NOTE: When hooked to shore power, or operating the generator, use the red button to enter a charge mode by selecting either On or Chg in the main menu. Failure to enter a Charge mode will result in dead house batteries.**

**Green Button:**

Press the **green** button to scroll the cursor. An underscore of the first letter indicates the selected mode. Press the **green** button to enable the **Automatic Generator Start** program, start the generator or begin Equalize Charge.

**OFF -** Turns off inverter control over any generator function.

**AUTO -** Enables the automatic generator start program.

**ON -** Overrides the automatic start program and starts the generator.

**EQ -** Starts an Equalize Charge to the house batteries on the next start cycle of the automatic generator start. The equalize charge (EQ) feature applies a high-voltage charge to the house batteries. The Equalize Charge voltage can exceed voltage operating limits of engine, transmission or other sensitive electronic equipment resulting in extensive damage. The EQ feature should only be enabled by qualified personnel. Before beginning an equalize charge, consult the battery manufacturer to obtain information on performing an equalize charge.

**WARNING: An Equalize Charge uses a significantly higher than normal charge voltage. This voltage can damage sensitive electronic equipment. Several precautionary measures are required when performing an Equalize Charge. Only qualified motorhome personnel should enable this feature. Consult the battery manufacturer before beginning an equalize charge cycle.**

**Inverter Reset:**

The factory default settings in the inverter are set to optimum values for most situations. Slight adjustments may be necessary depending on the amperage available from shore power, personal habits and battery type. A comprehensive study should be done before making any changes to the programming profile. If the programming was altered, it is easily reset to the factory default values.

**To Reset the Inverter:**

- Press the **Menu Headings Down** button on the remote until Trace Engineering heading “3” displays.
- Using the **Menu Item** buttons, scroll down until “Press Reset Now For Default” displays on the screen.
- Using the eraser end of a pencil or a pen, press the “Reset to Factory Default” button on the remote.

**NOTE: The main switch on the inverter remains ON.**

## Stand-by Operation

The inverter can be set-up for stand-by power operation. For example: If AC input is discontinued to the motorhome, the inverter will automatically provide AC power. When AC power resumes, the inverter will automatically return to "stand-by" mode. Battery charging is not effected by stand-by operation.

**To Activate Stand-by Mode:**

- Press the **red ON/OFF** button until the cursor indicates **ON**.

**NOTE: Remember to disable stand-by operation when not in use. House battery power may be accidentally consumed.**

**NOTE: In All Electric motorhomes, the inverter supplies the power necessary to operate the refrigerator if shore power is not available or not operating from the generator.**

## Battery Charging

Whether hooked to shore power or operating from the generator, the internal battery charger of the inverter will charge the house batteries. Battery charging does not begin automatically when AC power is available. The inverter must be turned on to begin battery charging. The time it takes to charge the batteries to a full state of charge varies greatly. It can take several hours or even days depending on the actual state of charge of the batteries and DC power consumption.

The inverter uses a three stage charging cycle. The first stage is "bulk" charge. The bulk charge will bring the DC voltage up high, initially between 14.2 and 14.6 Volts depending on ambient temperature. Voltage and current control the bulk charge cycle. The length of time the inverter is in the bulk charge cycle will vary with the state of charge of the batteries. The second stage is the "absorb" cycle. The battery voltages in the absorb cycle are the same as the bulk charge cycle between 14.2 and 14.6 Volts. The length of the absorb cycle is a timed event determined by the menu item Set Absorption Time under the menu heading number **9**, **Inverter Setup**. The final charging stage is the "float" charge cycle. Approximately 80% of the charging cycle is completed by this time. The float charge voltage is generally around 13.3 to 13.7 Volts. The last 20% of the charge cycle requires the most amount of time.

**To Begin Battery Charging:**

- Hook to shore power or start the generator.
- Press the **red** button on the inverter remote until the cursor indicates either **CHG** or **On**.

## Battery Temperature Sensor

The inverter uses a battery temperature sensor to adjust charge voltage. When battery temperature rises, the BTS sends this information, registering as counts, to the inverter to decrease charge voltage. Voltage compensation with temperature variation is necessary to keep the charge voltage at optimum figures. The BTS should be adhered to a house battery. If the BTS is unplugged, the inverter uses the default setting of 77º F/25º C as a temperature reference point.

060085b

## Pass-Through Power

Incorporated in the inverter is a double pole "pass-through" relay that trips when supplying AC power to the input terminals. This relay transfers AC power through the inverter to the AC sub panel supplying power to outlets and appliances. When AC power is supplied to the inverter, the internal battery charger will "ramp up" battery charging voltage. A time delay allows pass through AC power to the sub panel before ramping up the battery charge.

## Meters Menu

The meter heading number **4** in the user section displays various voltage and amperage readings.

**To access the meters:**

- Scroll the menu using the **Menu Headings** buttons until meters heading number "**4**" displays on the screen.
- Use the **Menu Items** buttons to view the available meters.

**NOTE: The meters do not display a (+) symbol for positive values.**

**Explanation of the Meters**

**Inverter/Charger:**

**Amps AC -** Displays the total number of AC amps used by the internal charger when hooked to shore power or operating from the inverter. This meter also displays the AC amp load when using the inverter.

**Input Amps AC -** Combined total of AC amps including the internal charger and pass through relay amps.

**Load Amps AC -** Displays the total number of AC amps of the pass through relay.

**Battery Actual Volts DC -** Displays the DC battery voltage at the inverter when hooked to shore power or operating the generator.

**Battery Temp/Comp Volts DC -** Displays the bulk voltage setting in the menu item **Set Bulk Volts DC** under the menu heading **Battery Charging Number 10**. Actual charge voltage will differ depending on ambient temperature. This is due to battery temperature compensation.

**Inverter Volts AC -** Displays the inverter's AC output voltage.

**Grid (AC1) Volts AC -** Not used.

**Generator (AC2) Volts AC -** Displays the incoming line voltage from either shore power or generator to the inverter.

**Read Frequency Hertz -** Displays the number of cycles per second of incoming power to the inverter.

## *Automatic Generator Start Programming*

**Procedure to program the automatic generator start function:**

There are several variables to the program. Some settings may work fine in one location, but not in another. The order of instructions will follow the sequence of the headings. Read all instructions thoroughly. This is not a substitute for the inverter manual.

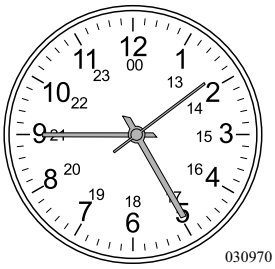


**Setting the Clock (24 hour):**

1. Using the **Menu Headings** buttons scroll to menu number "**6 Time of Day**."
2. Press the **DOWN** button on the **Menu Items** button, **Set Clock Hour** will display. Use the **Set Point** buttons to set the hour. Time changes in ten minute increments. The clock is a 24 hour clock. For example: 9:00 a.m. would be 09:00, 3 p.m. would be 15:00 and 7 p.m. would be 19:00.
3. Press the **DOWN** button on the **Menu Items** button, "**Set Clock Minute**" will display. Use the **Set Point** buttons to set the minute.
4. Press the **DOWN** button on the **Menu Items** button, "**Set Clock Second**" will display. Use the Set **Point** buttons to set the second.

**Setting Generator Timer:**

5. Press the **Menu Headings DOWN** button, Menu Heading number "**7 Generator Timer**" will display.
6. Press the **DOWN** button on the **Menu Items** button, "**Start Quiet Time h:m**" will display. **Start Quiet Time** is the time you want the generator to stop running or not start at or after quiet time begins. Using the **Set Point** buttons to set the hour and minute (24 hour clock) the generator will start quiet time.

7. Press the **DOWN** button on the **Menu Items** button, "**End Quiet Time h:m**" will display. **End Quiet Time** is the time you want the generator to begin operation. Using the **Set Point** buttons to set the hour and minute (24 hour clock) will end quiet time.

**NOTE: If desired the quiet time may be disabled. Set the Start and End Quiet Times to the same hour and minute.**

The next set of instructions cover many variables to program the starting or stopping events of the generator. Many different starting conditions, length of operation or stopping conditions are available. If in doubt about changing any settings, the factory default settings are average settings and will work in many situations.

**WARNING: Use caution when programming the automatic generator start function. When this feature is enabled the generator may start at any time. Disable this feature when performing service to the generator or when stored in an enclosed building.**

**Gen Auto Start Setup:**

8. Press the **red** and **green** buttons simultaneously to continue the generator **auto-start** programming. Heading number "**9 Inverter Setup**" should appear.

9. Press the **Menu Headings DOWN** button to scroll to heading number "**12 Gen Auto Start**" setup. Press the **Menu Items DOWN** button to advance through the next set of variables. Read all options first before setting any values of the **Menu Items** in Menu Heading number "**12**."

10. Press the **Set Point** buttons to change the settings of a Menu Item. **Menu Items** in **Menu Heading 12 Gen Auto Start Setup**:

**Set Load Start Amps AC -** Starts the generator when the AC current on the pass through relay of the inverter meets or exceeds the preset number of amps. For example: Setting the preset number of amps to 15 when hooked to a 20 Amp service starts the generator when the total current exceeds 15 Amps on the pass through relay.

**Set Load Start Delay Min -** This is the time delay period used with Set Load Start amps AC menu item. Example: setting the time period to 00:00 starts the generator immediately when the total number of amps exceeds the setting of menu item Set Load Start amps AC.

**Set Load Stop Delays Min -** This is the time period the generator continues to operate after the generator started from the setting in the Set Load Start amps AC menu item.

**Set 24 hr Start Volts DC -** Starts the generator if the voltage drops below the setting for a consecutive 24 hour period. For example: If the voltage is set for 12.5 Volts DC, and house battery voltage drops below 12.5 Volts for a continuous 24 hour period, the generator will start. This setting is helpful when storing the motorhome.

**CAUTION: It could be several days before the generator starts from the 24 hour voltage setting. Do not use this setting when storing the motorhome inside a storage building. Do not park the motorhome near dry grass.**

**Set 2 hr start Volts DC -** Starts the generator if the voltage drops below the setting for a consecutive two hour period. For example: If the voltage is set for 12.0 Volts DC and house battery voltage drops below 12.0 Volts for a continuous two hour period the generator will start. This voltage setting is usually lower than the 24 hr start voltage setting. Primarily used when dry camping. An example would be a light load on the house batteries over time. Voltage drops at relatively steady rate until obtaining the preset voltage for two continuous hours.

**Set 15 min start Volts DC -** Same operating principle as the previous two menu items. This voltage setting is used when applying heavy loads to the house batteries. An example: Using many lights and the inverter to watch the television and operating the microwave. These types of loads rapidly deplete battery reserves. Battery voltage drops quickly when applying heavy loads to the house batteries.

**Read 30 sec LBCO start VDC -** Used with the menu item **Set Low Battery Cut Off VDC** under menu heading number "**9 Inverter Setup**." If house battery voltage drops to this point, the inverter waits 30 seconds before starting the generator.

**NOTE: This start setting overrides quiet time.**

**NOTE: The generator will operate until the bulk and absorption cycles are complete if the generator started from one of the low battery settings.**

**Set Exercise period -** Starts the generator regardless of any other setting. Periodically starts the generator for maintenance reasons. The generator should be operated at least every 30 days to lubricate the internal engine components.

**Set Maximum run time h:m -** Displays an error message if the generator operates longer than the time period set. This is only a message. To cancel the message return to heading number "**2 Generator Mode**." Use the **green** button to scroll to **Off**. Setting the time and minute to **00:00** defeats this function.

**Gen Starting Details:**

11. Use the down arrow on the **Menu Headings** button to scroll to menu heading number **13**, **Gen Starting Details**.

12. Use the **Menu Items** button to scroll down to "**Set Gen warm-up seconds**." Use the Set Points buttons to set the time to 90 seconds. If it is not set to 90 seconds, the generator will shut down prematurely.

13. Use the **Menu Items** button to scroll down to "**Set Post Crank seconds**." Use the **Set Point** buttons to set the time to 90 seconds. If it is not set to 90 seconds, the generator will shut down prematurely.

**To Enable or Disable the Auto Gen Start Program:**

After completing the programming schedule, use the green button to return to heading number "**2 Generator Mode**."

- **To Enable the Automatic Generator Start Feature:** Press the green button and scroll to **AUTO**.

- **To Disable the Automatic Generator Start Feature:** Press the green button and scroll to **OFF**.

## *Inverter Facts*

**Important Facts About the Inverter:**

- The inverter will not charge automatically unless the remote is set to **CHG** or **ON** by using the red button.
- When the main battery disconnect switch is turned off, or if battery power to the inverter is removed, all program settings are lost. When battery power is restored, the inverter will need to be programmed.

**If the Inverter Fails to Charge:**

With AC available, if for any reason battery voltage dropped below 8.5 Volts DC, before the remote was set to CHG or On, the inverter will not charge the batteries. The inverter requires at least 8.5 Volts DC to operate the internal "brain." Use an alternate method of inducing a charge voltage to the house batteries.

1. Hook to shore power or start the generator.
2. Start the engine. The alternator on the engine should supply a charge to the house batteries.
3. The LCD screen should display. Press the **red** button until the cursor is under **CHG**.
4. After the remote indicates the inverter is charging, the engine can be shut off.
5. If this method does not work a battery charger may be used. Observe polarity when hooking up cables. Reverse polarity will damage the inverter.

**WARNING: The gases around the battery can explode if exposed to flames, sparks or lit cigarettes. An explosion can result in injury or vehicle damage. Batteries contain sulfuric acid, which burns skin, eyes and clothing. Do not connect the end of the second cable to the negative (-) terminal of the battery when being jumped. A spark may cause an explosion of the gases that surround the battery. Connect only to chassis, away from the battery.**

## DISTRIBUTION PANEL - HOUSE 110

The AC distribution panels are located in the bedroom. The main 120 Volt AC panel receives power from the transfer switch, which is supplied by either shore power or the generator. The AC power is supplied to the 50 Amp main breaker first, then the power is supplied to the individual branch circuit breakers. The panel label describes the breaker layout and the item, outlet or appliance to which they pertain. The sub panel receives AC power from the inverter. The sub panel supplies power to items which can be operated by the inverter. When operating from either shore power or the generator, the sub panel is automatically supplied with AC power from the pass through relay in the inverter. When hooked to shore power or operating from the generator, the AC power goes to the main AC panel first. The branch circuit breakers in the main panel then supply AC power to the input terminals of the inverter. The pass through relay inside the inverter trips supplying AC power to the sub panel.

When using the inverter as the AC power source, the pass through relay is normally closed. The AC power produced by the inverter supplies power to the sub panel only.

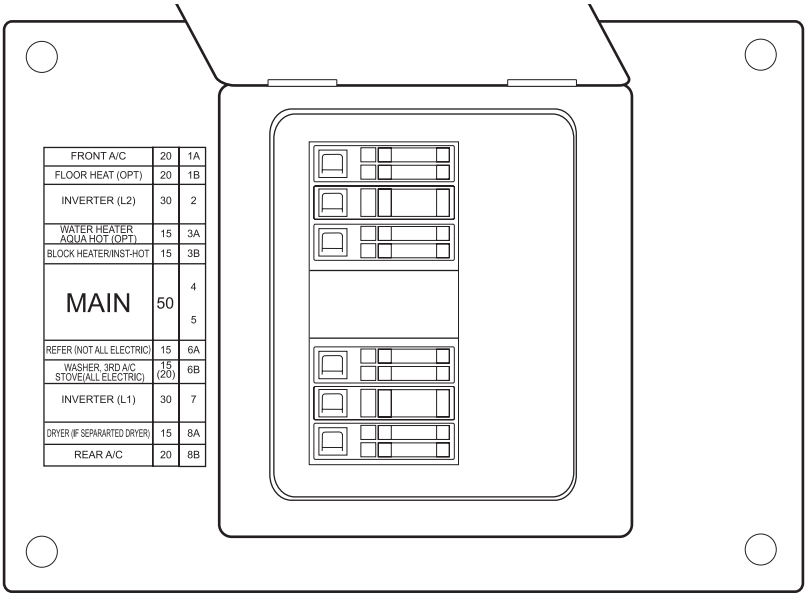


*Main Panel - Typical.*

060143

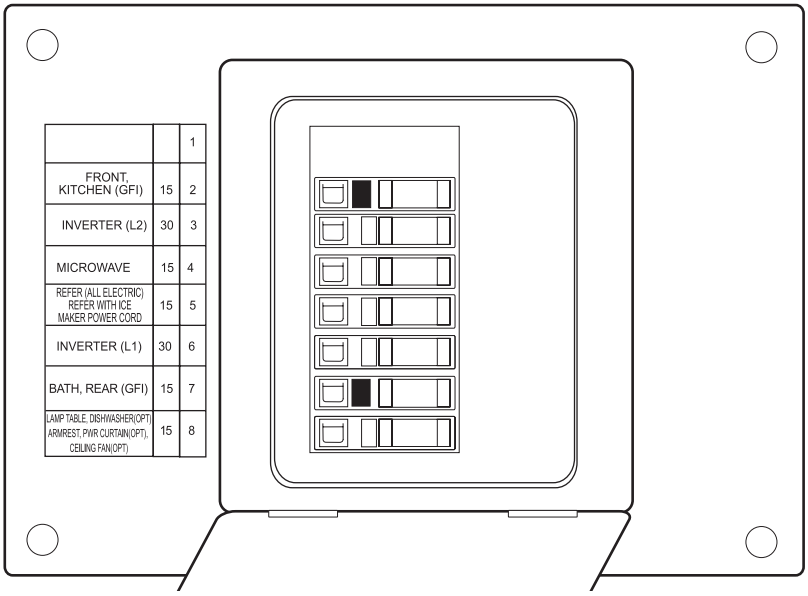


*Sub-panel - Typical.*

060142

**WARNING: The 120 Volt AC panels contain high voltage which can cause serious injury or death. Before beginning any work or testing procedures involving the electric panels, or any of the branch circuits, be sure the motorhome is unplugged from shore power, the generator is not running and the inverter is in the off position. Certain testing procedures may require the AC power to be on. Only qualified personnel with electrical backgrounds should attempt any testing procedures.**

Branch circuit breakers supply AC power to the different items or "loads." An electrical load is any item or device that will use current when supplied with an electromotive force. Should a breaker "trip" from over current use, or a short circuit condition, the load should be tested or disconnected to determine the reason the breaker tripped. If no cause is found, or not readily apparent, reset the breaker by toggling the breaker to the **OFF** position, then back to ON. Should the breaker trip again after the load is reapplied it may indicate a fault with that particular load. Do not continue to reset breaker until the problem has been diagnosed and corrected.

### *Circuit Breaker*

Breaker current ratings are current set points in which the breaker is designed to operate. The internal configuration of the circuit breaker is designed to trip when excess current is drawn through the breaker. The breaker will heat up from the excess current causing the breaker to trip. The trip action of the circuit breaker can occur within milliseconds due to the speed at which electricity can travel. Breakers are designed to operate at a continuous load of 80% of the breaker's rated capacity. For example: A breaker with a 20 Amp rating will operate a continuous 16 Amp load. This design leaves a small amount of working capacity within the breaker. When an inductive load is applied, such as when an electric motor turns on, the motor starts to spin and current consumption may momentarily exceed the rated capacity of the breaker. As the electric motor comes up to operating speed, the electric motor's current consumption will decrease. The AC current load then falls back into the breaker's rated 80% set point. This electric principle should be kept in mind when using anything other than 50 Amp shore service and using appliances with electric motors, such as air conditioners. When using outlets, care should be considered when applying loads such as electric motors, heaters, coffee makers, toasters, hair dryers or other large current consuming loads. The current rating is usually stated on most electrical items. The current rating will either be rated in amps or watts. Current ratings stated on electrical items will change slightly with voltage fluctuations. As voltage increases, current consumption decreases. As voltage decreases, current consumption increases. This may explain why in some instances items operated at borderline voltage to current tolerances may seem fine in one location but problematic in another.

**NOTE: To calculate watts to amps simply divide the watt figure by the voltage of which the item operates from. For example: The electrical item is rated at 1370 watts. Divide that by the operating voltage of 115 Volts which equals 11.913 Amps. Use this formula to calculate the amount of load to the available power supply.**

## GFCI BREAKERS & OUTLETS

A ground fault circuit interrupter (GFCI) can be found in two different types of applications. One type is incorporated in a breaker used in 120 Volt AC breaker panels, the other is incorporated in an outlet.

The GFCI, whether it is a breaker or an outlet, offer two types of protection. One type of protection is from over-current or shorts. It also provides protection for persons against hazardous ground fault currents which can result in injury or death. Ground fault currents are currents that flow from the "hot"or power terminal through a person to the ground. For example, touching a faulty appliance while standing on or making contact with an electrical ground such as a water fixture, bath tub or the earth. If the device has been properly installed it will offer protection against the type of shock that can result from faulty insulation, wet wiring from inside an appliance, or any device or equipment plugged in or wired to that circuit. The ground fault portion of the outlet or breaker uses sensitive electronics inside the outlet or breaker to detect a ground fault problem. The electronics monitor the normal current of power, flowing to the hot or black wire through the load (eg. a light bulb or appliance) and coming back on the neutral, or white wire. If just a small amount of the current comes back on the safety ground wire, the electronics will trip the breaker or outlet, stopping the flow of electricity. The amount of current it takes to trip the device from a ground fault varies slightly from the different outlet or breaker manufacturers (approximately 30 mils or less).

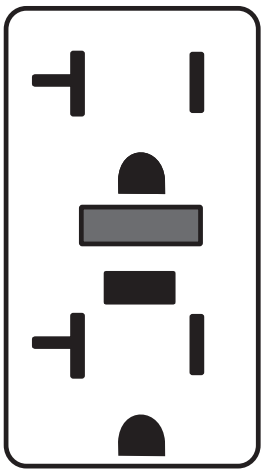

*GFCI Outlet.*

Electrical shocks resulting from ground faults can be felt, but such a shock is considerably less than one without ground fault protection. People with heart conditions, or other conditions that make them susceptible to shocks, can still be seriously injured. A GFCI outlet or breaker will not protect against shock from a normal current flow. For example, a shock from touching both metal prongs of an electrical cord or appliance while plugging it in.

**WARNING: If a breaker or outlet trips continually DO NOT continue to reset breaker or outlet until the problem has been identified and corrected.**

**NOTE: The ground fault outlet or breaker should be tested once a month to ensure it is working properly. Use the TEST button on the outlet or breaker. It should trip with an audible "click." The breaker or outlet will not trip if AC power is not present at the device. If power is present and the device will not trip, replace it before using that circuit.**

**NOTE: One mil is 1/1000 of one amp.**

## DISTRIBUTION PANEL - HOUSE 12 VOLT

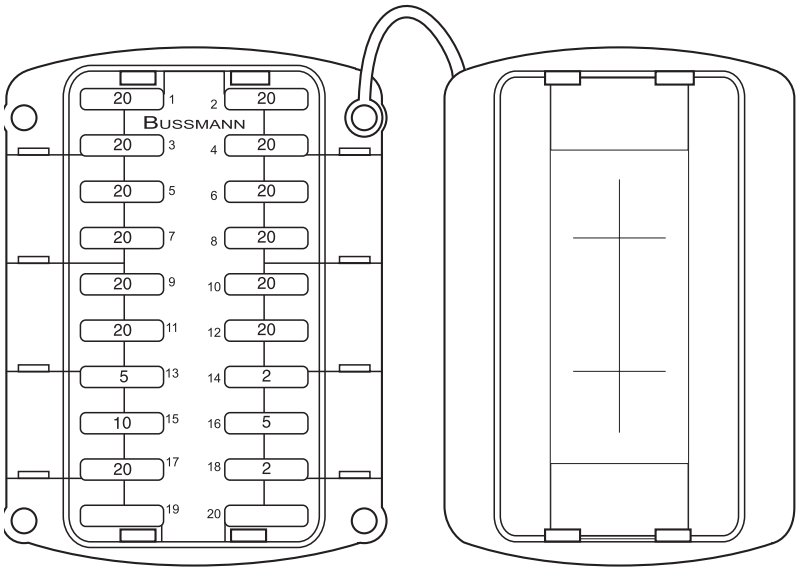


*Fuse Panel Label located in bedroom.*

The 12 Volt DC house distribution panel contains fuses (located in the bedroom) that protect the electrical circuits. These fuses are a standard automotive type.

When a fuse is "blown," the wire in middle of the plastic case will be burnt. A broken, bad or "blown" fuse must be replaced with a fuse of the same rating and type. Using a fuse with a different rating or type will defeat the circuit protection provided by that fuse and could result in damage to the motorhome's electrical system.

Refer to the fuse label for a description of each circuit.

## FUSES

| AMPERAGE | COLOR |
|---|---|
| 1 | BLACK |
| 2 | GRAY |
| 3 | VIOLET |
| 4 | PINK |
| 5 | GOLD |
| 7.5 | BROWN |
| 10 | RED |
| 15 | BLUE |
| 20 | YELLOW |
| 25 | CLEAR |
| 30 | GREEN |

*Amperage Chart.* amperagechart

The 12 Volt fuses, located in this distribution panel, service the interior house lighting, ventilation fans, monitor panel, furnace and water heater. Should a fuse blow it will be evident by the broken metal strip located in the center of the fuse. Replacement fuses should be of the same amperage. If a higher rated fuse is installed it can damage the wiring. Fuse current set points follow much of the same electrical principle as the 120 Volt AC breakers. Using 12 Volt DC as the electromotive force can make it more susceptible to outside influences, such as corrosion from weathering or oxidation.

The large variety of applications this voltage can be used in makes it a diet staple for most of the recreational vehicle and automotive industries. The danger from shocks with this voltage is minimized, but can still occur. A good example is when a magnetic field is generated, then collapses when the power supply is cut. The result is a discharge that can reach tens of thousands of volts for a short time period. Care should be used when working with this voltage as current values can be quite high, like in the case of battery cables.

Shorting a battery cable to ground with a battery at a reasonable state of charge can result in a fire or serious personal injury from a burn.

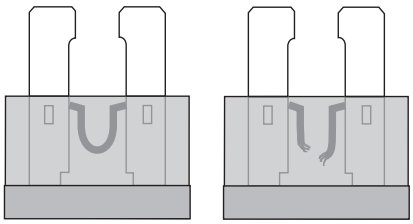


*ATO Fuse* 060086B

## Tools of the Trade

One of the most widely used tools for testing a 12 Volt problem is the test light. Test lights come in a host of varieties, such as a light bulb with a probe and ground clip, to the more elaborate electronic ones that measure a wide scale of voltages and perform a variety of functions. A VOM or Volt Ohm Meter is used to perform a multitude of tests. It is generally used when exact values are needed for evaluation. These meters come in an analog or digital format. Either of these two testing tools may be used, depending upon personal preference. If a 12 Volt light is not working, the test light may be better suited for this. In the case of a charging system problem the meter may be the tool of choice. In any situation the testing tool is an invaluable piece of equipment when it comes to determining an electrical problem.

## Knowing When to Say When

Should it become necessary to use testing tools take certain precautions and consider three things. First, recognize when the problem is beyond your skill level. Nothing will create more mayhem than being armed with tools and going in an unknown direction. Good intentions have led to major problems. The second item to keep in mind is if something will cause more grief by being dealt with now than if it were left alone and repaired by a professional at a more convenient time. How many times have you said to yourself, “Oh this will only take a few minutes,” only to find it is taking an entire day and you wished you had not touched it? The third item to consider is whether or not the current situation may be potentially dangerous if left to be repaired at a more convenient time.

**NOTE: Check all related fuses before assuming you have encountered an electrical problem or situation. Spare fuses should be kept on hand and can be purchased from auto parts stores. A fuse description label is on the distribution panel cover.**

**WARNING: If a fuse blows replace the fuse with same amperage rating and type. Installing higher amperage fuses can damage the wiring or the item the fuse is protecting, or may cause a fire. If the fuse repeatedly blows after replacing it do not continue to replace it. Have the problem diagnosed and corrected by a qualified technician.**

## BATTERY - *How It Works*

Batteries come in different sizes, types, amp hours, voltages and chemistries. There are nearly as many descriptions of battery types and how they should be used as there are people willing to offer advice on them. Although it is not possible to cover batteries in their entirety, there are guidelines that can be followed to ensure that the batteries are well maintained.

The operation of the battery is based on a chemical reaction. The battery is a container of lead plates, insulators and a solution of distilled water and sulfuric acid. The solution, when mixed together, is known as "electrolyte." The 12 Volt battery is actually six batteries in one case. When charged, each cell has a voltage of 2.1 Volts. When six cells are hooked together this makes a 12.6 Volt battery (fully charged).

Electrons are stored on the negative plates. When a load (eg. a light bulb) is placed between the positive and negative terminals, the electrons move from the negative plate to the positive plate through the "load" and then back to the ground terminal. At this time the sulfuric acid leaves the water and adheres onto the plates of the battery. The electrolyte solution keeps the electrons from flowing while the battery is in the "at rest" position.

Charging the battery moves the sulfuric acid back into solution with the distilled water. A battery left in a low or discharged state will cause the acid to "sulfate." In attempting to recharge the battery, the acid has become hardened and no longer will leave the plates and enter into the liquid solution with the distilled water. The lowered acid to water ratio has a direct affect on the battery's ability to release the stored electrons (power output) and the length of time it can perform (reserve capacity). Batteries left in a discharged condition will readily freeze. This can crack the case allowing the solution to spill, it can also warp the plates. The acid acts like an "antifreeze" for the battery. This is why batteries should not be left or stored in a "discharged" condition.

### *Starting Battery*

Starting batteries are designed for high output cranking power, but not for deep cycling like the house batteries are designed to do. Starting batteries will not last long in deep cycle application. The way they are rated should give a good indication of their intended use. "Cold Cranking Ampere" is a measurement of amperage output that can be sustained for 30 seconds. Starting batteries use thin plates to maximize the surface area of the battery. This allows a very high starting current but lets the plates warp when the battery is deep cycled (discharged).

*Battery with cover.*

*Battery with cover removed. This will require cutting plastic to remove cover*

## Deep Cycle Battery

Deep cycle batteries are best suited for use with 12 Volt operated lights, appliances and inverters. Deep cycle batteries are designed to have a majority of their capacity used before being recharged. These are available in many sizes and types. The most common is a non-sealed, liquid electrolyte battery. The non-sealed types have battery caps. The caps should be removed periodically to check the level of electrolyte. When a cell is low, only distilled water should be added. Water consumption will vary depending on many factors: how far the batteries are depleted, how long the voltage is being applied to charge the batteries, how much voltage is used and how often this occurs.

**NOTE: Tap water contains minerals which can alter battery chemistry and ruin the battery. Use only distilled water when refilling the battery.**

## Battery Trays

**ISM Engine:**

The engine (chassis) batteries are located in the engine compartment. Periodically **inspect** the mounting hardware and trays. The trays and hardware should be tight and clean with no corrosion.

**House Battery:**

The house battery tray slide will occasionally need to be lubricated. When performing maintenance to the batteries clean the old lubricant and dirt from the battery tray slide with solvent, brake cleaner or equivalent. Do not allow any of the cleaning solution or battery acid by-products to spatter onto the painted surfaces. Damage to the paint surface will result. Lubricate all moving parts of the battery tray slide with white lithium grease or Kwikee brand spray lubricant.

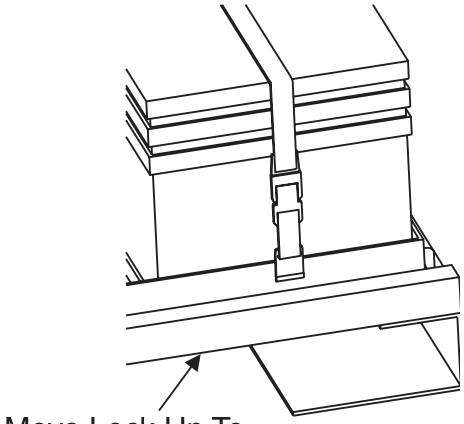


**NOTE: Driving without the tray secured can result in damage.**

**CAUTION: Many types of petroleum based products or battery by-products can damage the paint finish. Do not allow these types of chemicals to get on the paint finish. If the chemicals do get on the painted surfaces immediately rinse the surface using plenty of water with a mild automotive detergent.**

## Battery Maintenance

The battery Electrolyte level should be checked at least once a month. Check the level sooner if the battery is frequently used. The level should be above the top of the plates, but not overfull. Most batteries have a plastic cup or well. The electrolyte level should be approximately 3/8” below the well to allow room for expansion while the battery is being charged. Over-filling the battery will allow the electrolyte solution to boil or gas out of the battery cap. Remember to use only distilled water to refill the battery. A battery with a low electrolyte level will boil the water out rapidly once the plates have been exposed to air. This process may take only a matter of hours. If this has happened the battery is more than likely damaged.

After checking the battery’s electrolyte levels it is also a good idea to check the battery connections for tightness and corrosion. If any corrosion is found disconnect the cables (make sure to mark their locations) and carefully clean them with a mild solution of baking soda and water. There are also aerosol products available that will work. This will neutralize any acid that may be present. Do not allow the solution to enter the battery as this will damage the electrolyte balance. Use water to rinse the top of the battery and surrounding area when done. Carefully hook the cables back to the battery. The battery cable to battery terminal connections should be metal to metal. Coat the terminals with petroleum jelly or an anti-corrsion grease.

Periodically check the batteries for corrosion. Look for cracks and check the vent plugs. Replace them if they are cracked or missing. Keep the top of the batteries clean. The accumulation of electrolyte and dirt may permit small amounts of current to flow between the terminals, which can drain the battery.

**WARNING: Liquid lead acid batteries produce hydrogen gas while being charged. This is highly explosive. Do not smoke around batteries. Extinguish all flames in the area. The hydrogen gas may explode resulting in fire, personal injury, property damage or death.**

## Testing the Battery

There are several ways that a battery can be tested and monitored. The Aladdin System shows the voltage of the house batteries at a quick glance.

The most efficient way of testing the batteries is to check the electrolyte solution. The only way to test a battery’s electrolyte solution is with a hydrometer.

Many styles are available, from types with cylinder graduation (shown here) to types with floating balls. Hydrometers can be purchased from most auto parts stores. The hydrometer tests the battery's electrolyte solution which is measured in specific gravity. Distilled water has a specific assigned gravity of 1,000. The hydrometer is calibrated to this mark. Pure sulfuric acid has a specific gravity reading of 1,840. The acid is 1.84 times heavier than water. The electrolyte solution is about 64% water to 36% acid (fully charged battery). Hydrometers with cylinder graduation are graphed and the exact state of specific gravity can be determined.

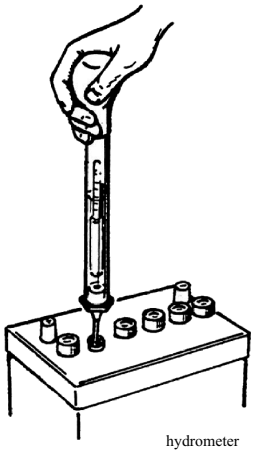

*Hydrometer (Cylinder Type).*

Temperature and recent battery activity (charging or discharging) affect the hydrometer readings. It is best to check the battery when it has been "at rest" for at least three hours, although readings taken at other times will give a "ballpark" figure. When using the hydrometer, draw the electrolyte solution up into the tube. Allow the hydrometer to attain the same temperature as the electrolyte solution. Note the reading for that cell. Complete the same test for the rest of the cells on that battery bank.

The hydrometer is calibrated at 80° F. Temperature affects the hydrometer readings. The higher the electrolyte temperature, the higher the specific gravity reading. The lower the temperature, the lower the specific gravity reading. Add or subtract four points for each 10° variance from the 80° F chart. Readings between cells should not vary more than 50 points.

If one cell in a particular battery bank being tested is at a 50% state of charge while the others are indicating a full charge, charge only that battery to see if the low cell will come up. At the same time, do not over charge the "healthy" cells.

If the low cell does not come up after charging, this battery can damage the rest of the battery bank and should be replaced. An accurate digital volt meter + - .5% will also give an indicator of the battery's state of charge.

Another test that can be performed is to place a specific load on the battery for a predetermined length of time equal to that particular battery's rating. This machine is usually an adjustable carbon pile that can vary the load being applied to the battery(s) while monitoring voltage to see if they will perform to their specific rated capacities.

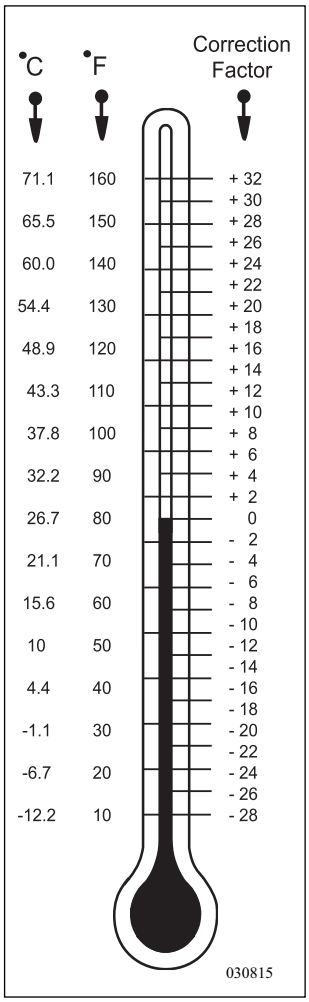

*Temperature Correction Chart.*

**NOTE: See the chart for temperature compensation. Liquid levels should be even between the cells of the battery being tested as it will affect the accuracy of the test.**

**WARNING: Sulfuric acid in the batteries can cause severe injury or death. Sulfuric acid can cause permanent damage to eyes, burn skin and eat holes in clothing. Always wear splash-proof safety goggles when working around the battery. If the battery electrolyte is splashed in the eyes, or on skin, immediately flush the affected area for 15 minutes with large quantities of clean water. In case of eye contact, seek immediate medical aid. Never add acid to a battery once the battery has been placed in service. Doing so may result in hazardous splattering of electrolyte.**

## Reasons Why Batteries Fail

**1. Physical Condition:**

Active material flakes off the plates and falls to the bottom of the cell. This is normal, but sediment accumulation under the plates can short out a cell. The plate separators fail to insulate positive and negative plates in a cell and the cell becomes shorted, ruining the battery.

**2. Insufficient Electrolyte:**

This allows exposed portions of the plates to sulfate rapidly. This reduces the battery's ability to accept a charge and the battery capacity is reduced. Accelerated erosion of the lower portions of the plates occur from higher than normal acid content due to water loss. Only the water evaporates, not the acid. The battery also has a higher internal resistance when low on water. Add only distilled water. Fill each cell to the bottom of the vent well when the battery is warm. Filling a very cold battery with water to the bottom of the vent well will cause overspill when the battery warms up and the plates expand. A Battery Formula For Failure: the battery has a higher internal resistance when low on water, therefore: *high resistance = more heat = shorter battery life!*

**3. Sulfation:**

When a battery remains discharged for too long the accumulated lead sulfate in the plate material solidifies and cannot reenter the electrolyte. When a battery is left in a discharged state the lead sulfate will crystallize. Charging the battery does not move the crystallized lead sulfate off the battery plate. The battery is damaged.

**4. Overheating:**

The chemical reaction inside of the battery is increased when the battery temperature rises above 125º F. This increases the corrosion of the plates and reduces the battery life. When overheated, the battery plates tend to buckle and destroy the structural integrity of the battery.

**5. Freezing:**

When the electrolyte freezes, ice formed dislodges the active material from the plates. The battery case may crack and the electrolyte will leak out when thawed. It is especially important to keep a battery at full charge in cold weather to prevent freezing. The high specific gravity of a fully charged battery does not freeze as easily. Never attempt to charge a frozen battery. Warm it up first.

**6. Corrosion:**

Corrosion from spilled or splashed electrolyte form deposits that can conduct electricity and can cause battery drain. Clean off all corrosion, especially around the battery terminals and on the top of the battery. Prevent accumulation by coating the terminals and the exposed metal cable connectors with high temperature grease.

**7. Overcharging:**

Overcharging rapidly converts water to gas and decreases the electrolyte's water content as the water evaporates. The electrolyte level drops and becomes more acid in content. This subjects the plates to a higher concentration of sulfuric acid and results in early battery failure.

**NOTE: Any time more than one or two ounces of distilled water is added per-cell per-thousand miles, check the motorhome charging system for overcharging. Prolonged overcharging generates excessive heat inside the battery, which buckles the plates and destroys the battery. It is a fact that over 50% of battery failures are caused by overcharging.**

## *Battery Voltage & Current*

Why does the voltage on a discharged battery measure the same as a fully charged battery until the loads are applied? The simple answer to this might go as follows: A battery creates electrical power by converting energy from a chemical reaction into electrical energy. As this reaction slows down the battery voltage will drop. In a lead acid battery the electrolyte conductivity (how well electrical current can flow through it) changes. The same current may be available but the rate of the reaction decreases, causing a voltage drop.

Another way of looking at this is to use the analogy of a water pump (a battery is an electric pump). The pressure in psi (pounds per square inch) that a pump delivers is like a battery's voltage. The volume of water in GPM (gallons per minute) is like the electrical current. Look at a 12 psi pump with no loads (the pump is running but the outflow valve is turned off). The pump will run and the internal pressure of the pump will build up to some point higher than 12 psi. When the valve is opened, and the water is free to flow into the loads, the pressure will drop to the rated output pressure of 12 psi, but only if the load is not too big. If the pump is designed to maintain 12 psi at 15 GPM, and a load demanding 20 GPM is connected, the pump will not be able to keep up and the pressure will get sucked down to a lower psi. If the load is reduced or removed the pump will catch up and return to its rated 12 psi pressure. If the pump has an infinite source of water, such as a lake or the water utility (this is like the grid, no battery), the pump will never run out of pressure.

If the pump never runs out of pressure, and is operated at or below its 15 GPM level, it will hold 12 psi. However, a pump that is connected to a water tank with a finite capacity will start to lose the ability to hold pressure as the level of water in the tank drops. Think of siphoning water from a bucket. As the level of the water drops, the volume of water exiting the siphon slows down.

When the tank is full it is capable of feeding more "pressure" to the pump inlet due to gravity, and the pump always has enough water available to maintain its rated pressure and volume. However, if the water tank gets low the pump will not have enough water volume coming in to maintain 12 psi at 15 GPM. If the loads are removed from the pump by closing the valve on the outflow, even with low pressure in the tank the pump will eventually pressure up to 12 psi. It will just take it longer to get there. When the valve is opened the pump will sustain 12 psi for a brief period, but since the tank is no longer feeding the pump as fast as needed the pressure will eventually drop. This analogy can be restated by replacing the pump with a battery, pressure with voltage, volume with amps, outflow valve with a switch, water with electricity and the water tank with the battery electrolyte.

The level of the tank could be thought of as the rate of the reaction occurring in the electrolyte. When the battery is fully charged the electrolyte has an excess of reactions taking place to feed the battery terminals. This tapers off with time as the electrolyte is spent, so maintaining voltage becomes possible. With no loads the discharged electrolyte will be capable of producing close to the rated voltage, but only after a period of time has elapsed for enough of a reaction to take place to bring the voltage back up. Hopefully, this explanation will clarify why a battery measured at rest can indicate close to its rated voltage but will not run a load.

## *Battery Charge Time & Consumption Rate*

**Calculating Run Times:**

Calculating run time figures when operating 120 Volt AC electrical items with an inverter can be exponential. This is due to battery characteristics. Flow characteristics of electrons vary with different battery types and chemical compositions. Deep cycle batteries are generally designed to slowly release a majority of their charge capacity. Deep cycle batteries are rated in amp hours (Ahrs) with the discharge occurring over an extended period of time before the battery is charged. Engine starting batteries are designed to quickly release large amounts of current for short durations, without depleting battery reserves. Commercial type batteries bridge the gap of deep cycle and engine batteries. Commercial batteries release medium amounts of current over a longer period of time but they are not designed to cycle their charge capacity.

The working range of a deep cycle battery is between 50 and 100% state of charge (SOC). Deep cycle batteries should not be cycled below 50% state of charge. Discharging a deep cycle battery below 50% state of charge shortens the life of the battery. Deep cycle batteries use an amp hour rating which is usually calculated over a 20 hour discharge interval. For example: A deep cycle battery with a rated capacity of 100 Ahrs. is designed to release current at the rate of 5 Amps per hour. Multiply a 5 Amp load over a 20 hour discharge period equals the rated 100 Ahr. capacity. These discharge figures are calculated with the battery starting at 100% state of charge with the battery at 80º F when the discharge cycle begins. However, increasing the discharge load applied to the battery from 5 Amps to 10 Amps on a 100 Ahr battery does not yield ten hours of discharge time. This is due to the internal reactions which occur when a battery is discharging. Actual discharge time for a 10 Amp load may be closer to eight hours of discharge time. Increasing the load applied to the battery to 20 Amps will not yield five hours discharge time but may be less than three hours. It might be understood as a point of diminishing return.

Calculating applied loads to an inverter to approximate run time from the battery amp hours available is not an equal trade up when voltage is inverted and amperage is calculated. When the inverter is used to operate an AC load it uses approximately ten times the DC current needed from the battery when inverting 12 Volts to operate the 120 Volt item. There is also a small efficiency loss of about 10% when inverting. For example: When using the inverter to operate an AC electrical item, which has a current draw rating of 2 Amps, the inverter will use over 20 Amps DC power from the batteries.

**Determining Current Consumption:**

First determine the amount of current used by an AC item. For example: The television is rated at 200 watts at 120 Volts. Calculate watts to amps. Divide 200 watts by the operating voltage of 120, this equals 1.6 Amps. Multiply 1.6 Amps AC current by a factor of ten the inverter will use, this equals 16 Amps DC battery current. Add the revised 10% efficiency loss figure, this calculates to a total of 17.6 Amps DC. If the battery bank capacity is rated at 500 Ahrs., actual elapsed time to the suggested 50% state of charge would net viewing time for the television at approximately 13 hours in ideal conditions.

The run time figure will vary greatly with the actual state of charge of the battery bank when the discharge process begins. Ambient temperature, combined with other working loads, such as lights and parasitic loads applied to batteries, affect run times. Calculating the exact run time is not precise due to all the variables and equations involved; however, an approximate time figure can be obtained. Proper battery maintenance and charge cycles affect battery performance. Observe the battery condition with hydrometer and voltage readings. Use only distilled water when filling batteries. To achieve the highest quality of battery performance and longevity maintain the batteries in their proper operating range.

## BATTERY SPECIFICATIONS CHART - HOUSE

| APPLICATION | AH (20HR) | CCA† | RC (25A @ 80° F) MINUTES |
|---|---|---|---|
| 12 Volt Chassis* Group 31p - MHD (2 each) | | 950 | 195 |
| 6 Volt Domestic** U2200 (4 each) | 450 | | 75Amp@ 80º F. = 230 Min. |
| 12 Volt Domestic* GPL-8D (All Electric - 5 each) | 255 | 1350 | 461 |

**Batteries connected in parallel. **Battery connections are made in a Series/Parallel connection.*
*†CCA Ratings are at 0º F. These are the minimum requirements.*

| Approximate Hours at Ampere Load | | | | | |
|---|---|---|---|---|---|
| | 5 AMPS | 10 AMPS | 15 AMPS | 20 AMPS | 25 AMPS |
| **U2200** | **55.0** | **22** | **12.5** | **9.1** | **7.0** |

| Approximate Hours at Ampere Load | | | | |
|---|---|---|---|---|
| | 5 AMPS | 8 AMPS | 15 AMPS | 25 AMPS |
| **AGM GPL-8D** | 52 | 27 | 13.3 | 7.6 |

*Loads conducted @ 80° F. with battery fully charged to 1260 per cell specific gravity. Voltage to maintain 1.75 Volts per cell (10.5 Volts for 12 Volt battery).*

| Battery State of Charge vs Voltage/Specific Gravity | | | |
|---|---|---|---|
| VOLTAGE | SPECIFIC GRAVITY | STATE OF CHARGE | DEPTH OF DISCHARGE |
| 12.66 | 1.265 | 100% | 0% |
| 12.45 | 1.225 | 75% | 25% |
| 12.25 | 1.190 | 50% | 50% |
| 12.05 | 1.145 | 25% | 75% |
| 11.90 | 1.100 | 0% | 100% |

*Voltage Reading: Battery fully charged at rest for one hour.*

Battery Charge Voltage chart.eps

| Engine Cold Cranking Amp Requirements | | | | |
|---|---|---|---|---|
| **Series 60** | **1800** | **CCA** | **12** | **VOLTS** |
| **ISM Cummins** | **1800** | **CCA** | **12** | **VOLTS** |

*CCA Rating are at 0º F. These are the minimum requirements.*

## SOLAR PANEL

The motorhome is equipped with a solar-powered battery charging system. The system consists of one solar panel with mounts, a Combiner box (this allows additional panels to be wired to the system) and a charge controller that can handle up to five 100 watt solar panels.

**NOTE: Two panels are installed on All Electric motorhomes.**

**Solar Panel:**

The solar panel is a laser-grooved, buried-grid panel that is capable of delivering about five amps of charge per hour, per panel, in full sunlight (usually between 9:30 a.m. and 2:30 p.m.). Extensive testing has shown that one 100 watt solar panel delivers enough power to offset the normal day-to-day drain on batteries caused by various parasitic electrical loads. These parasitic loads are usually associated with transmission memories, alarm systems, natural self-discharge of batteries and other like items. This means that the first solar panel is only intended to cover these parasitic loads. Adding a second, third or more solar panels (depending upon needs and electrical consumption) can replace what is drawn out of the batteries from the operation of lights, water pumps, inverters, etc., while dry camping.

**NOTE: The solar panel needs to be cleaned monthly. The solar panel may need to be cleaned more frequently depending on weather conditions.**

**Combiner Box:**

The Combiner Box is located on the side of the refrigerator vent on the roof. It has four standard "knock outs" to allow additional solar panels to be added to meet dry-camping needs.

**Charge Controller:**

The Charge Controller, built specifically to meet the needs of a motorhome, can be set to accommodate either Flooded Lead-Acid batteries or Absorb Glass Mat (AGM) batteries. The Charge Controller is located in the large pass-through bay.

Status of the charge controller is viewed through the Aladdin System electrical status display. The controller is used as a heat sink for the electronics attached to it. It is normal for the controller to become warm to the touch, especially when processing higher amperage. The charge controller will automatically enter Thermal Shutdown if it gets too warm.

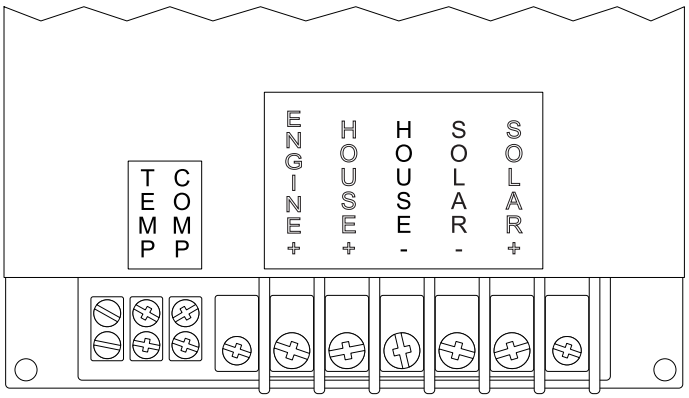


*Charge Controller* 080418

## Charge Controller Features

The RV-45D Charge Controller has many unique features.

1. **Dual Battery Bank Charging -** Parasitic loads affect both the House and Engine batteries. The controller automatically charges both the House and Engine batteries at the same time to deal with this issue.

2. **Pulse Width Modulation -** This charging strategy has been found by the Sandia National Laboratories to maintain the highest state of charge with the least amount of water consumption by the batteries. In effect, it delivers all the available charging amperage until the batteries reach their set point voltage (this stage is called bulk charging) and then it begins to taper off amperage (absorption stage) until it is reduced to all that is needed to simply hold the batteries at their set point voltage (Float Stage).

3. **Temperature Compensation -** The gassing threshold of the batteries is reached at around 14.1 to 14.4 Volts at room temperature (25º C). If the temperature of the batteries is hotter than 25º C, the gassing threshold is reached at a lower voltage. If the temperature of the batteries is colder than 25º C, the gassing threshold is reached at a higher voltage. This feature protects the batteries from excess water loss and/or plate sulfating by automatically compensating for these temperature changes and adjusting the charging voltage accordingly.

4. **Automatic Equalization (Only when set to Flooded Lead-Acid Batteries) -** This feature is activated once per day to extend the life of the batteries by allowing the weaker cells a chance to catch up with the stronger cells. This assures that all cells will be at an equal state of charge. The first time the house batteries reach 14.2 Volts during the day, a delay timer is activated that allows a short duration period (20 to 30 minutes) at a slightly higher voltage (14.5 to 15.0 Volts) and then falls back to the 14.2 Volt setting for the remainder of the day.

5. **Automatic Float (Only when set to Absorbed Glass Mat Batteries) -** Resets the charge parameters to work with AGM batteries and removes the equalization cycle. AGM batteries are sealed and are not designed to withstand the higher voltage reached during equalization. The feature also changes Float setting from 14.2 to 13.4 Volts, which is the AGM battery manufacturer's recommendation.

**CAUTION: The Charge Controller may be warm to the touch. This is a normal function of the Charge Controller.**

## Solar Panel Care

A critical part of maintaining the solar electric battery charging system is to keep the panel clean. The amount of power that a panel will produce is directly related to the intensity of sunlight. A dirty panel will allow less light to reach the panel, resulting in less power produced. A single layer of dust or road grime can reduce the power output by 15 to 25%. Leaves and debris that can cover two or three of the 36 individual cells can reduce output power by 50 to 75%.

Use of the basic maintenance tips, regular inspections and regular cleaning will assure maximum charging from the solar charging system. To clean the panel, use a non-abrasive cleaner and paper towels. The surrounding environment and the amount of road dust encountered will determine how frequently the panel should be cleaned. One to two times a month is preferred.

**Tips to Follow:**

1. The panel should be cleaned if a film or a layer of dust is on the windshield.
2. On a bright sunny day, the charging amps should be 3.5 to 5 Amps per panel.
3. High winds can blow dust and debris around causing dirt build up. Frequently **inspect** the panels and clean as necessary.

**CAUTION: To avoid arcing at the battery connector when replacing batteries or performing battery cable maintenance, be sure to remove the fuse for the solar panel charge controller or cover the solar panel to stop the production of electricity at the source.**

## LIGHTS - INTERIOR HALOGEN

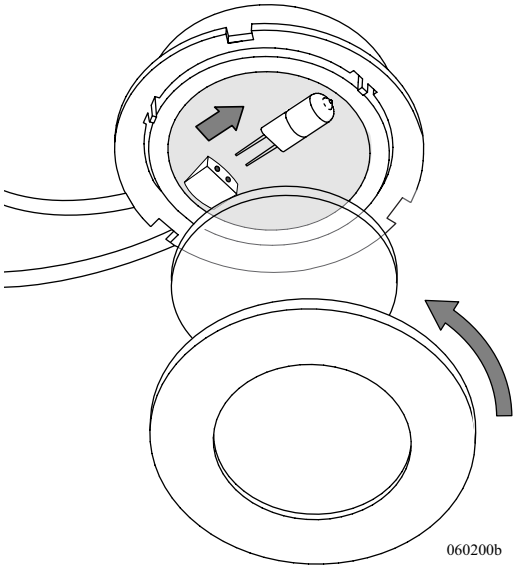


The bulbs inside the halogen lighting are replaceable.
To Replace a Bulb:

1. Remove outer trim ring by rotating outer trim ring counter-clockwise.
2. Remove safety lens by pressing lens towards a retaining tab. Pull lens down and away.
3. Carefully grasp bulb and pull bulb from socket.
4. Use a clean cloth or piece of tissue to grasp new bulb. Do not touch bulb directly as this can cause a "hot spot" and may result in immediate bulb failure.
5. Align contacts of bulb with terminals in fixture base. Insert bulb until contacts are firmly seated.
6. Replace safety lens.
7. Align tabs in trim ring with slots in fixture base. Rotate lens clockwise until trim ring locks into place.

**CAUTION: Do not touch halogen lighting while on. They can cause a burn. Do not touch replacement bulbs. Oil in the hands can cause a "hot-spot" to occur. If the bulb is touched, clean bulb with alcohol.**

## BULB USAGE - INTERIOR

| INTERIOR BULB CHART | |
|---|---|
| **LOCATION** | **BULB NUMBER** |
| CEILING LIGHTS | GE F15T8 - CW |
| DASH LIGHT | 161 |
| COSMETIC/VANITY LAMP | 12V 13W 9-019F |
| CLOSET LAMP | DE 561 |
| ROUND 3” HALOGEN CEILING LIGHT | 12V 10 W FC 2585 |
| ROPE LIGHT | LITCO 31-120-40 |
| ENTRY HANDLE LIGHT TUBE | MP# 16615157 |
| MAP LIGHT | 12V 6W 38886K |
| STEPWELL LIGHTS | Vista Manufacturing 90416 |
| WALL LAMPS | 120V 40W 6-16.5 (2”) |

** MP = Monaco Part Number*

## ALL ELECTRIC (Optional)

The material in this section covers items that are particular to the All Electric motorhome. This is meant to augment the rest of the manual and therefore is not a substitute. The key for the All Electric motorhome electrical system to function properly is understanding how the AC and DC electrical systems interface. Become familiar with the inverters and programming the remotes. The generator must be operating properly for of the Automatic Generator Start feature to function. The charge condition of the house batteries is equally important. Keep the inverter owner's manual in the motorhome to be used as a reference.

The motorhome does not have propane and operates much differently than the standard propane equipped motorhome. All appliances operate from AC, DC, diesel or a combination thereof. For the electrical system to function, the 120 Volt AC and 12 Volt DC power supply sources must be operating properly, especially the generator. When shore power is not available, appliance operation relies exclusively on the generator, inverter or batteries for power. The inverter Automatic Generator Start feature should be enabled when shore power is not available to help prevent dead house batteries. Using the inverter as the 120 Volt power source can quickly consume battery power. Do not allow the batteries to discharge lower than 50% SOC (State of Charge) as the ability to obtain a full state of charge, and the number of discharge cycles, reduces each time a severe discharge occurs. Frequent discharge under 50% will cause the batteries to no longer accept a charge, resulting in electrical system malfunction or total system failure.

The SOC of the batteries determines the length of time the inverter can operate from the batteries. Use arithmetic to calculate inverter run time or DC power loads. When dry camping, closely monitor interior light use. Some lights operate only from 120 Volt AC.

**NOTE: One inverter will need to remain on to operate the refrigerator when dry camping**

**CAUTION: The shore power requirement of an All Electric motorhome, in most situations, will exceed 20 Amp shore power service. It is strongly recommended to hook to 30 Amp service or start the generator.**

### *Overview*

The motorhome is equipped with two inverters. The two inverters, combined with the house battery bank, supply an ample amount of power when the system is used wisely. When dry camping, turn the inverters on only when needed. The inverters use battery power to supply 120 Volt AC power to operate most of the appliances, outlets and the entertainment system.

The Automatic Generator Start feature should be enabled to start the generator to prevent the battery bank from severe discharge. When house battery voltage becomes low, the Auto Gen-Start will engage to supply 120 Volt AC power to the main load center and the inverters. The inverters charge the battery bank. The generator will continue to operate until the pre-programmed stop point. The generator stops and the inverters supply 120 Volt AC power, repeating the cycle.

**NOTE: This is not a replacement for the inverter manual. Keep the inverter manual in the motorhome as it will be needed for reference.**

## Meters

The two inverters are electrically linked together with an external shunt that monitors AC and DC current. A shunt allows a majority of the current to flow through the shunt on heavy conductors, while some of the current flows through on light conductors. The external shunt is what the Master inverter uses to monitor DC charging or discharging current. An internal shunt monitors AC current. When hooked to anything less than 50 Amp service, or particularly when dry camping, use the Master remote to monitor AC and DC current consumption and charging values. The AC and DC meters are located in the Meters Menu. Analog meters are available for quick AC reference when hooked to shore power or operating from the generator. Use the inverter meters to calculate the amount of DC power the inverter requires to operate the refrigerator, cook top and microwave. Write down the figures to approximate discharge time of the battery bank.

**NOTE: When using the inverters as the power source the analog meters do not operate.**

## Remotes

In the All Electric motorhome each inverter has its own remote control panel. The RC7 GS remote panel, located in the monitor panel, is the Master remote. The RC7 panel, located adjacent to the monitor, is the Slave remote. All programming and monitoring values are established through the Master remote. Programming the inverters, or changing program values, have a significant effect on the performance of the electrical system. The remotes for the All Electric motorhome use a different programming schedule. These different values are Shunt Selection, Battery Type and Battery Capacity. These must be programmed correctly for the electrical system to function properly.

**NOTE: When programming the inverters make sure the correct shunt option, battery type and battery capacity are programmed. All remote programming information is stored in the inverter. The remote is a display of stored information only.**

**Accessing the Program Menu:**

There are several settings available in the programming menu. Care should be used when selecting or changing a program setting.

- Press the Menu Set-Up (**Up** and **Down** arrows) buttons simultaneously for three seconds. When the control panel beeps, release the buttons immediately.
- The programming menu is successfully entered when Search Sense appears on the screen. Use the Up or Down arrows to scroll the programming menu.
- The Settings button will change the value or option.
- Press the Menu Set-Up buttons to exit the programming mode.

**External Shunt: This Inverter**

**External Shunt: Other Inverter**

**Shunt Selection -** When programming the shunt option, the Master inverter remote in the monitor panel will be programmed **"External Shunt: This Inverter."** The Slave inverter adjacent to the monitor panel will be programmed **"External Shunt: Other Inverter."** The Slave remote will then be a used as a display only. All AC and DC voltage and current values are viewed through the Master remote.

**Auto Gen Start -** The Auto Gen Start feature can be programmed to start the generator from either a specific voltage or a percentage of state of charge. The Auto Gen Start feature can be programmed to stop the generator at a point of the charge cycle or a percentage of state of charge. If the Auto Gen Start feature is programmed to start or stop the generator from a specific state of charge, the voltage setting of Fuel Gauge Cutout will affect at what point the generator starts or stops. For example: If the Fuel Gauge Cut-out voltage is set to 11.8 Volts with the generator set to start at 80% SOC (state of charge), actual voltage when the generator would start would be approximately 12.5 Volts.

**Battery Type -** Charge voltage is automatically selected when programming the battery type of the Master remote in the programming menu heading “Battery Type.”

**Battery Type AGM**

**Battery Type:** Select **“Battery Type: AGM**” - This setting uses a lower charge voltage than the Liquid Lead Acid setting.

**Battery Capacity 1000Ahr**

**Battery Capacity -** The amount of time in the Bulk and Absorb charge cycles are automatically selected when programming the Battery Capacity of the Master remote. In the programming menu under **Battery Capacity**: select **Battery Capacity 1000Ahr.**

**While Traveling:**

While traveling, the refrigerator may be operated keeping the refrigerator contents cool. The electrical combination of the engine's alternator and the inverter's AC output supplies the power necessary to operate the refrigerator on 120 Volts AC. Disable this feature when the engine is off. House battery power is quickly consumed when using the inverter to operate the refrigerator on AC electric. Hook to shore power, start the generator or enable the Automatic Generator-Start feature. To conserve house battery power, turn the inverter off when not in use.

**NOTE: All-Electric motorhomes include two solar panels which are installed on the roof.**

## House Batteries

The battery bank consists of five Type 8-D 255 amp hour AGM (Absorb Glass Mat) batteries. The batteries are hooked in parallel. Voltage readings are the only way to accurately determine the state of charge of the sealed AGM batteries. Voltage readings are most accurately measured after three hours of battery inactivity. The length of time it takes to charge the battery bank to a full state of charge will vary with the following conditions:

| State of Charge (%) | O.C.V./Cell | O.C.V./12 Volt Battery |
|---|---|---|
| 100 | 2.13 | 12.8 or greater |
| 80 | 2.10 | 12.6 |
| 60 | 2.05 | 12.3 |
| 40 | 2.00 | 12.0 |
| 20 | 1.97 | 11.8 |
| 0 | 1.93 | 11.6 or less |

**These voltage levels are approximate and give an indication of the state of charge of a battery at rest. As the battery ages these voltage measurements will be lower.**

- How deep were the batteries discharged?
- What other DC loads are applied during the charge cycle?
- What is the actual physical condition of the batteries?
- Inverter remote programming.

It may take a number of hours or days, with the motorhome hooked to shore power 24 hours a day, to charge the batteries to a full state of charge. During the charge cycle, one inverter may be in Bulk charge while the other is in Float. This is normal, as the two inverters though electrically linked through a common shunt, do not have a common link between their internal chargers.

Discharge and recharge time of the house batteries will vary depending on the type of load and voltage during the charge or discharge cycle. Discharging the batteries at a slow steady rate to a specific voltage, then charging the battery bank for the same amount of amp hours removed during the discharge cycle, will not yield a charged battery bank. The AGM battery bank, though very efficient, is not a perfect trade with amp hours discharged and charged. In addition, the type of discharge load depends on the charge time. A rapid and heavy discharge cycle yields less available amp hours than a slower discharge rate. Conversely, a rapid discharge cycle, though equivalent in the same amount of amp hours as a slow discharge cycle, requires a longer charge time. Regardless of the type of discharge cycle, it always requires more amp hours to charge the batteries than what the batteries have discharged.

The life of the battery bank will greatly decrease when the Depth of Discharge (DOD) is below 50%. Charge the batteries whenever they have been discharged. Batteries left in a discharged condition will eventually no longer accept a full charge or may not accept a charge at all. Never store the motorhome with a discharged battery bank. It is better to make several small discharge and full charge cycles than a few deep DOD cycles.

**NOTE: For optimum battery life, the batteries should not be cycled lower than 60% state of charge.**

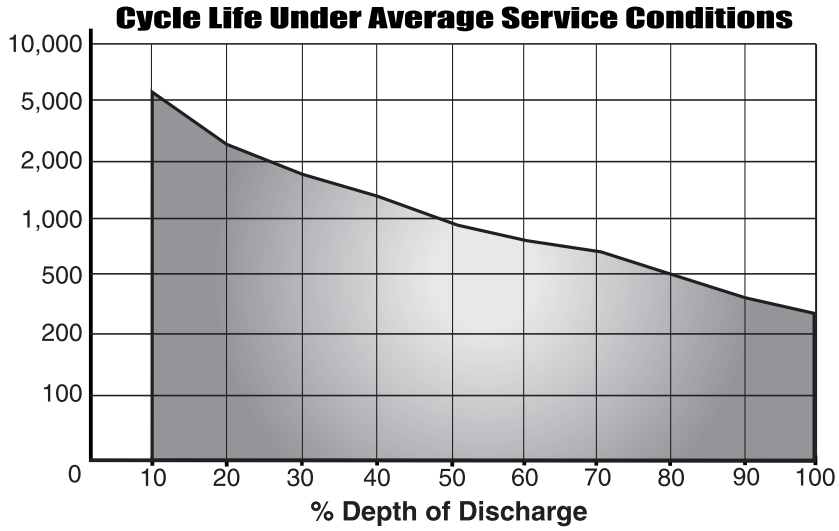


**Test Conditions:** 1. Discharge Voltage = 1.75 V/Cell. 2. Charge Voltage = 2.4 V/Cell. 3. Duration = 1 Hr. Rate. 4. Temperature = 25° C. 5. End of Life = 80% Capacity.

Battery Depth Discharge % Chart

## Main Battery Disconnect

8

Located in the battery bay are two main battery disconnect switches for the house batteries. On the back of each disconnect switch is a 500 Amp fuse. These fuses protect against a shorted battery cable or other over current condition. A weatherproof fuse holder, with a 20 Amp ATO fuse for the solar panel, is attached to one of the battery disconnect switches.

**CAUTION: When working on the batteries use protective measures against short circuits. Place insulating material over the batteries when working on or near the battery area. Remove rings and watches. Use extreme caution when working with hand tools. Do not allow the tool to short circuit battery connection. Always mark cable routing and location before servicing, removing or replacing batteries.**

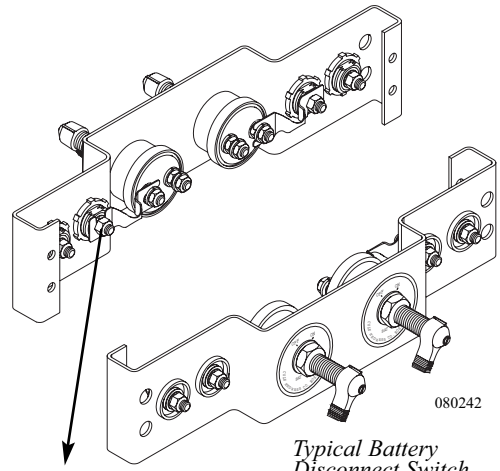


*Typical Battery Disconnect Switch*

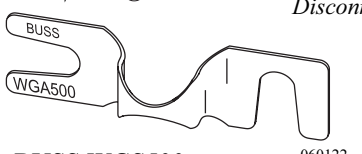


BUSS WGS500

## Alternator

The engine alternator is a 270 amp Leece/Neville. The alternator is not designed to charge the house batteries from a complete discharge to a full state of charge. The alternator will maintain the battery charge during travel, supplying the DC current necessary to operate running lights or other DC loads.

## Wiring Systems Interfaced

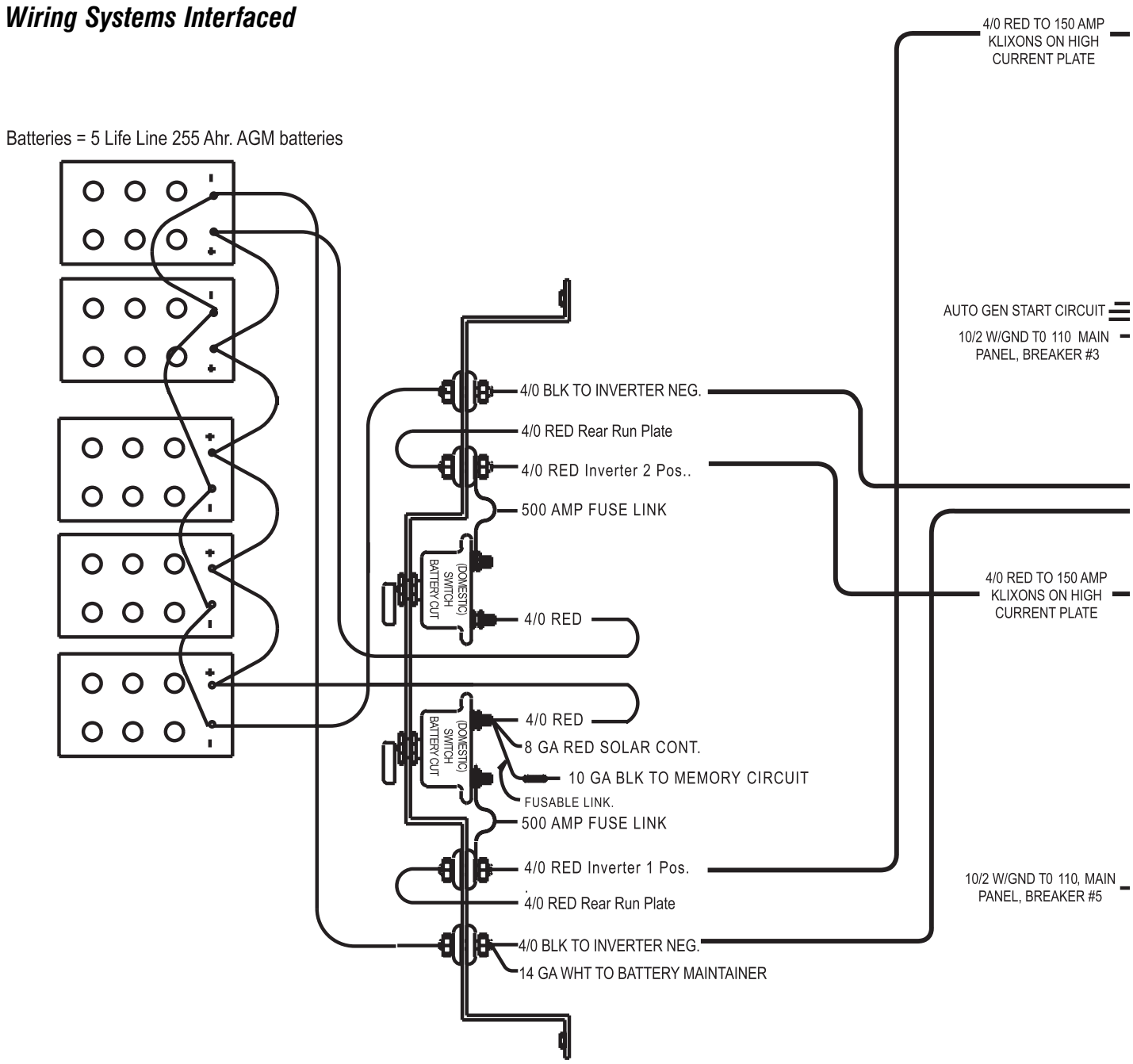

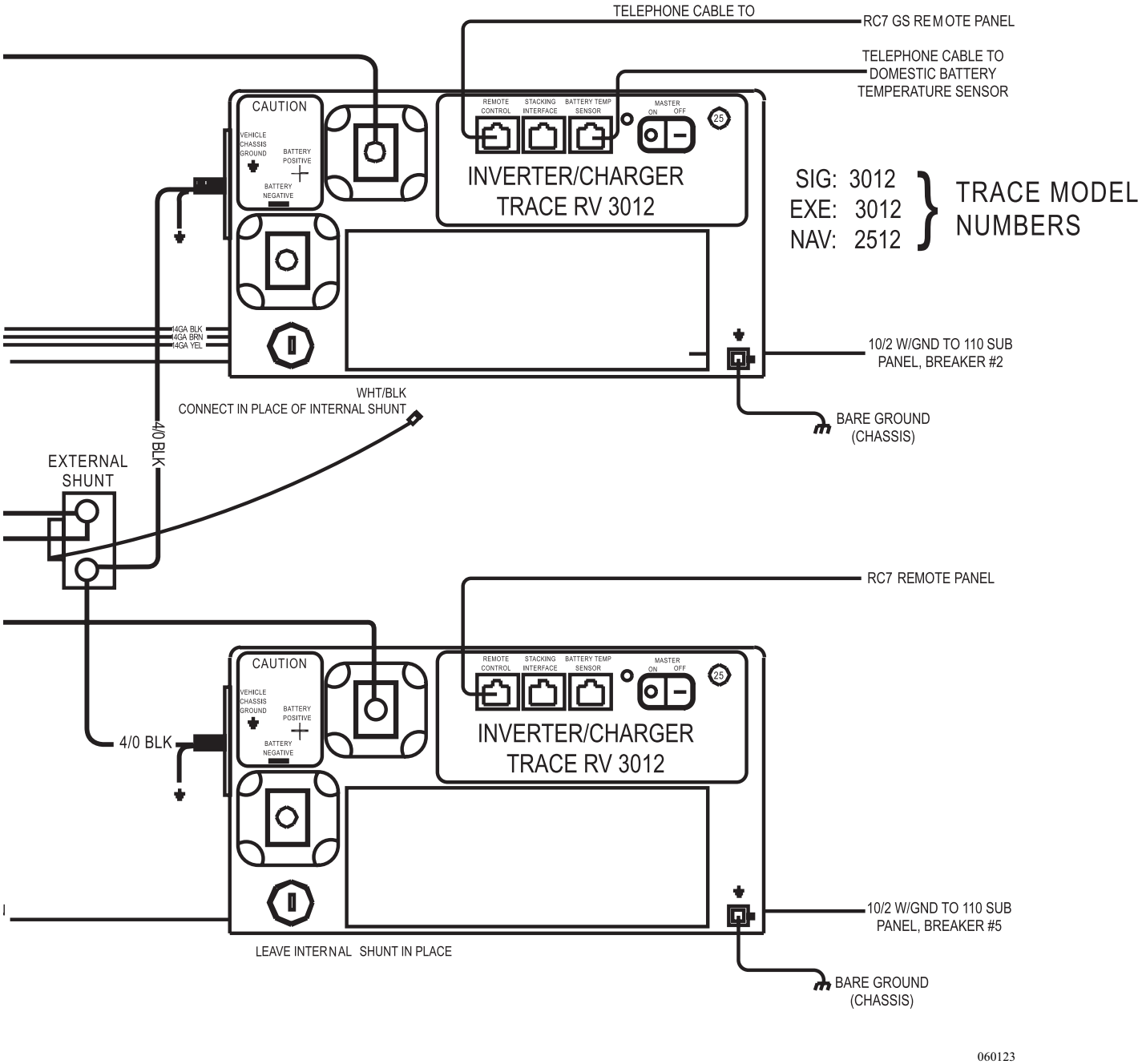
TELEPHONE CABLE TO
RC7 GS REMOTE PANEL
TELEPHONE CABLE TO
DOMESTIC BATTERY
TEMPERATURE SENSOR
CAUTION
VEHICLE
CHASSIS
GROUND
BATTERY
POSITIVE
BATTERY
NEGATIVE
REMOTE
CONTROL
STACKING
INTERFACE
BATTERY TEMP
SENSOR
MASTER
ON
OFF
25
INVERTER/CHARGER
TRACE RV 3012
SIG: 3012
EXE: 3012
NAV: 2512
TRACE MODEL
NUMBERS
#4GA BLK
#4GA BRN
#4GA YEL
10/2 W/GND TO 110 SUB
PANEL, BREAKER #2
WHT/BLK
CONNECT IN PLACE OF INTERNAL SHUNT
BARE GROUND
(CHASSIS)
4/0 BLK
EXTERNAL
SHUNT
RC7 REMOTE PANEL
CAUTION
VEHICLE
CHASSIS
GROUND
BATTERY
POSITIVE
BATTERY
NEGATIVE
REMOTE
CONTROL
STACKING
INTERFACE
BATTERY TEMP
SENSOR
MASTER
ON
OFF
25
4/0 BLK
INVERTER/CHARGER
TRACE RV 3012
10/2 W/GND TO 110 SUB
PANEL, BREAKER #5
LEAVE INTERNAL SHUNT IN PLACE
BARE GROUND
(CHASSIS)
060123

8

# ~ NOTES ~

# Electrical Systems - Chassis

## Section 9


**ELECTRICAL CHASSIS - INTRODUCTION .....427**
**BATTERY DISCONNECT - CHASSIS .....427**
**BATTERY - CHASSIS .....428**
**BATTERY SPECIFICATIONS CHART- CHASSIS ....429**
**FUSES & CIRCUITS.....430**
Electrical Panels .....430
Rear Start Box.....431
**ALTERNATOR.....432**
Alternator Testing Procedure .....433
**STEERING COLUMN & SMART WHEEL .....434**
Smart Wheel Operation.....435
Wiper Function .....435
Tilt & Telescope.....437
**CONSOLE .....438**
Transmission Shift Selector .....438
Parking Brake .....439
Leveling Controls.....439
**DASH.....440**
Indicator Lamps .....440
Gauges.....442
Switches .....444
**DASH AIR CONDITIONER & HEATER CONTROLS..449**
About Refrigerants.....455
**SYSTEMS CONTROL CENTER.....459**
**DIAGNOSTIC PLUG LOCATION.....460**
Diagnostic Bracket (Engine).....461
**ALADDIN™ ENGINE DISPLAY .....462**
**BULB USAGE CHART - EXTERIOR .....463**
**ENGINE "NO START" - FLOW CHART.....464**

## ELECTRICAL CHASSIS - INTRODUCTION

A majority of the chassis electrical functions are designed to operate from 12 Volt DC (direct current) power. This is why the chassis batteries play such an important role in the function of the motorhome. There are some exceptions, such as the engine and transmission, because these components use electronics that operate at a much lower voltage. It is important to keep the 12 Volt system(s) in good working order. These systems, with their incorporated electronics, are voltage sensitive. If DC voltage is not within specification, some electronic items may act erratic or be damaged.

There are two separate 12 Volt systems. One is the chassis system; the other is the house system. These two systems, for the most part, are separate from one another. The house system does not operate engine functions; as the engine system does not operate house functions. However, within the two systems there are some inner connections. For example: While the motorhome is driven the alternator on the engine will charge the house batteries. Likewise, while the motorhome is plugged into shore power, or the generator is running, the engine batteries are being charged. Each system will supply 12 Volt DC power to the 12 Volt distribution panels. The 12 Volt panel that services a majority of the chassis system functions is located outside by the roadside front wheel. The other panel, located in the bedroom, services the house interior functions such as the interior lighting and appliances. You should become familiar with these panels and the items they operate.

The two different systems, engine and house, have their own set of batteries. The engine battery supplies 12 Volt DC power to the front distribution panel located in an outside compartment by the roadside front wheel. This panel contains mostly engine system fuses and wiring such as headlights, taillight, dashboard functions, gauges, etc. The house batteries supply 12 Volt DC power to the distribution panel located in the bedroom. This panel contains fuses for the house, interior lighting and appliances, such as the furnace and water heater.

## BATTERY DISCONNECT - CHASSIS



The main battery disconnect switch turns the DC power on or off to the front electrical bay and most components in the rear distribution panel. Most chassis and engine functions are interrupted when the battery disconnect is turned off. Some electronic items require a constant power source for memory retention such as the dash and CB radios. Some electronic components of the engine and transmission require a constant power source.

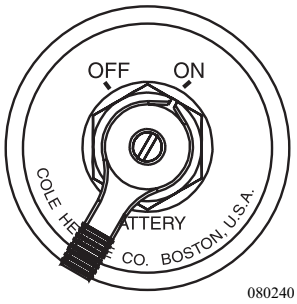


**NOTE: The main battery disconnect is located in the engine compartment.**

Turn the main battery disconnect switch off when the motorhome is going to be stored, or when performing electrical maintenance. If possible, leave the motorhome plugged into an AC source with the battery disconnect switch on. This will help prevent the possibility of dead batteries.

If an AC source is not available, and the motorhome is not going to be used, or is stored more than 48 hours, it is recommended to turn the battery disconnect switch off.

**NOTE: The solar panels will charge the batteries with the disconnect switches off.**

**WARNING: When frame or other welding is involved for motorhome repair or modification, only qualified, experienced technicians should weld on the chassis. Improper welding procedures and materials may weaken the assembly or result in damage that is not obvious and may not cause an immediate problem or failure. Unauthorized modifications or repairs to the chassis could result in a forfeiture of warranty coverage.**

**Due to the sensitive nature of the electronics on the chassis, the following precautions are required to protect electrical components in the motorhome chassis.**

1. **Disconnect the (+) positive and (-) negative battery connection, and any electronic control ground wires connected to the frame or chassis.**
2. **Cover electronic control components and wiring to protect from hot sparks.**
3. **Disconnect the terminal plugs from the engine Electronic Control Unit located on the passenger side of the engine block.**
4. **Disconnect all the plugs from the Allison Electronic Control Module located in the Electrical Bay at the driver's side front of the vehicle.**
5. **Disconnect the wiring from the alternator.**
6. **Do not connect welding cables to electronic control components.**
7. **Attach the welding ground cable no more than 2 feet from the part to be welded.**

## BATTERY - CHASSIS

The chassis battery operates only chassis and engine functions. The chassis battery is a crank type battery, producing the high amperage needed to start the engine. Engine starters initially require a large amount of current to crank an engine. The type of application in which the engine battery is used differs from the house battery application. The engine battery state of charge remains consistent. Maintenance is still required to the engine battery. Regular electrolyte level checks and hydrometer readings should be performed. High electrolyte consumption, or inconsistent hydrometer cell readings, may indicate a charging system problem. Perform a charging system and current draw check if the battery is exhibiting abnormal hydrometer readings.

**NOTE: Replacement batteries should have the same cold cranking amp (CCA) rating.**

## BATTERY SPECIFICATIONS CHART - CHASSIS

| APPLICATION | AH (20HR) | CCA† | RC (25A @ 80° F) MINUTES |
|---|---|---|---|
| 12 Volt Chassis* Group 31p - MHD (2 each) | | 950 | 195 |
| 6 Volt Domestic** U2200 (4 each) | 450 | | 75Amp@ 80º F. = 230 Min. |
| 12 Volt Domestic* GPL-8D (All Electric - 5 each) | 255 | 1350 | 461 |

**Batteries connected in parallel. **Battery connections are made in a Series/Parallel connection.*
*†CCA Ratings are at 0º F. These are the minimum requirements.*

| Approximate Hours at Ampere Load | | | | | |
|---|---|---|---|---|---|
| | 5 AMPS | 10 AMPS | 15 AMPS | 20 AMPS | 25 AMPS |
| **U2200** | **55.0** | **22** | **12.5** | **9.1** | **7.0** |

| Approximate Hours at Ampere Load | | | | |
|---|---|---|---|---|
| | 5 AMPS | 8 AMPS | 15 AMPS | 25 AMPS |
| **AGM GPL-8D** | 52 | 27 | 13.3 | 7.6 |

*Loads conducted @ 80° F. with battery fully charged to 1260 per cell specific gravity. Voltage to maintain 1.75 Volts per cell (10.5 Volts for 12 Volt battery).*

| Battery State of Charge vs Voltage/Specific Gravity | | | |
|---|---|---|---|
| VOLTAGE | SPECIFIC GRAVITY | STATE OF CHARGE | DEPTH OF DISCHARGE |
| 12.66 | 1.265 | 100% | 0% |
| 12.45 | 1.225 | 75% | 25% |
| 12.25 | 1.190 | 50% | 50% |
| 12.05 | 1.145 | 25% | 75% |
| 11.90 | 1.100 | 0% | 100% |

*Voltage Reading: Battery fully charged at rest for one hour.*

Battery Charge Voltage chart.eps

| Engine Cold Cranking Amp Requirements | | | | |
|---|---|---|---|---|
| ISM | 1800 | CCA | 12 | VOLTS |
| Series 60 | 1800 | CCA | 12 | VOLTS |

*CCA Rating are at 0º F. These are the minimum requirements.*

## FUSES & CIRCUITS
### *Electrical Panels*

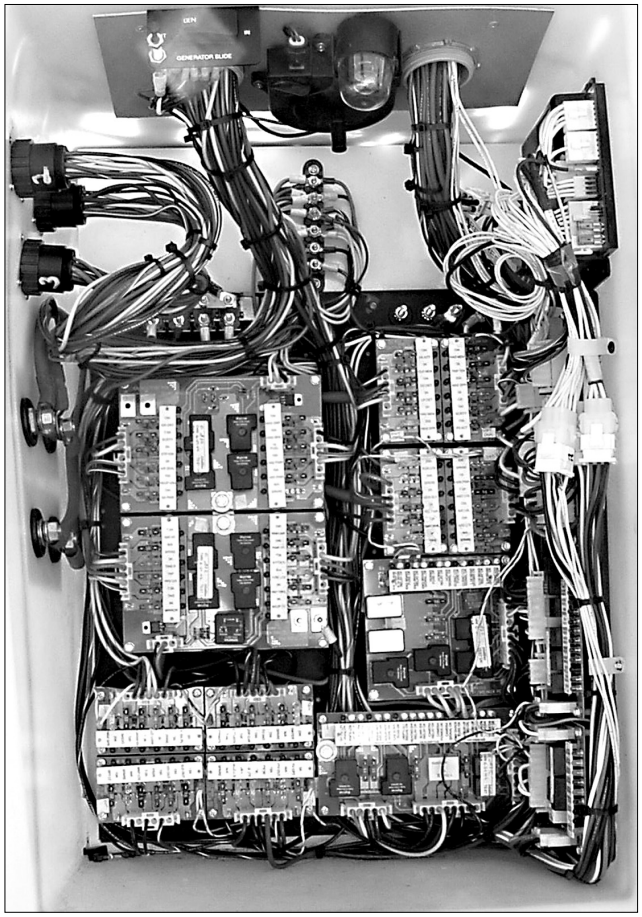

*Front Run Box.*

The motorhome uses two electrical panels that control automotive system functions and some house operated items. The electrical panel located roadside, ahead of the front wheel, contains fuses, self-resetting circuit breakers and micro-relays.

The electrical panel located in the curbside rear compartment contains high-amperage circuit breakers, a high-amperage solenoid and the rear start box. The rear electrical panel operates engine functions and some house operated items. The circuit cards in both electrical panels use **red**, **yellow** and **green** LEDs to indicate power. The fuses are standard ATC blade type. When a fuse "BLOWS," the wire in middle of the plastic case will be broken. A bad or blown fuse must be replaced with a fuse of the same rating and type. Using a fuse of a different type rating will defeat the circuit protection provided by the fuse, which could result in damage to the motorhome's electrical system. If a fuse has been replaced and it "BLOWS" repeatedly, that may be an indication that a fault exists or an electronic component has failed. It is recommended that the motorhome be taken to a qualified RV technician before any future use to diagnose and repair the problem. Circuits are identified on the fuse label located on the inside of the electrical compartment door.

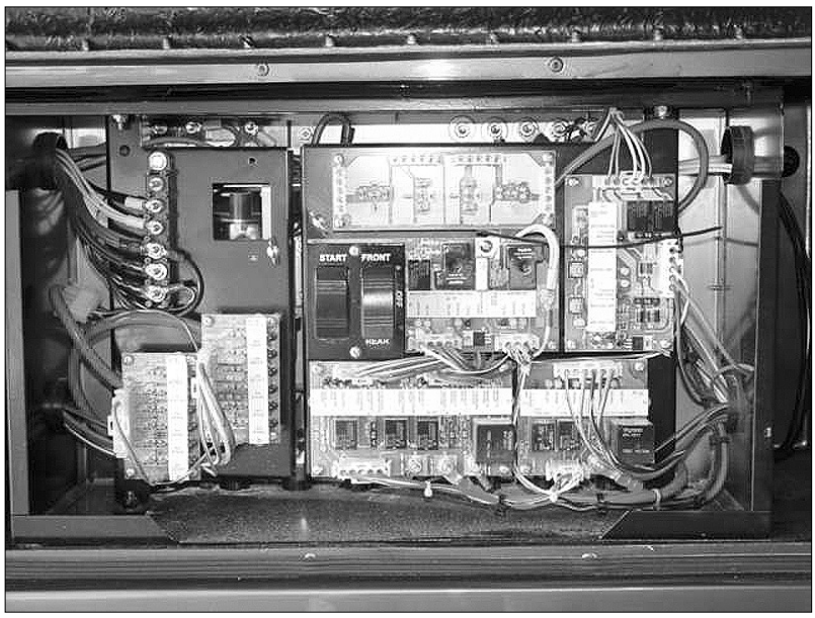


*Rear Run Box.*

NavRearRun3.tif

**To Start From the Rear:**

When starting the motorhome from the rear make sure all tools and parts are clear from the engine. Check to see if there is anything underneath the motorhome. Once the motorhome is ready to start from the rear, read the following instructions carefully.

- Turn ignition key to the **ON** position.
- Move rocker switch on the rear start box down to **REAR**.
- Ensure everything is clear of rotating parts.
- Hold the momentary switch to **START**. After the engine starts, release the switch.
- Move switch to the center **OFF** position, to turn the engine off.
- Check the rocker switch, make sure it is in the position desired.
- For normal operation, place the switch to **FRONT**.

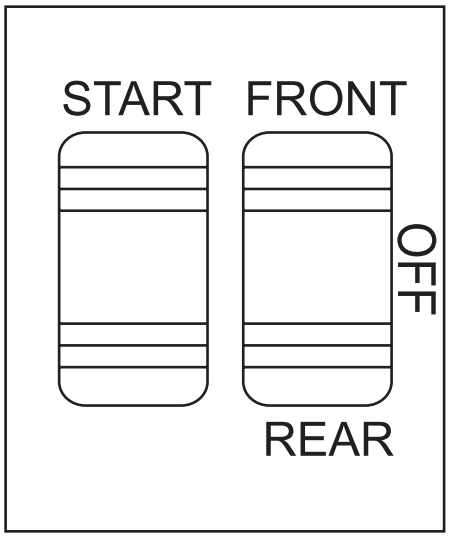


*The Rear Start switches are located inside the Rear Run Box in the Curbside Rear Most Compartment.*

**NOTE: If the motorhome will not start from the front, check the rear start box to see if the switch was bumped to OFF or REAR. If the motorhome still will not start, try to start it from the rear start box.**

**CAUTION: When checking or servicing the engine compartment this switch should be placed in the REAR position. This will prevent accidental starting of the engine from the cab area.**

## ALTERNATOR

The Leece-Neville alternator with integral rectifier, regulator and remote voltage sensor is designed for reliable output throughout the engine operating range. When traveling, keep an eye on the voltmeter in the dash area. Normal readings should be between 13 to 14.5 Volts. Voltage indications higher or lower indicate a problem with the charging system. If the alternator output drops below an acceptable level, a charge indication warning lamp will illuminate.

The alternator replaces the amp hours the chassis battery uses to start the engine. The amount of charge to the batteries is dependent on the amount of time the engine is operated. Repeatedly starting the engine and driving the motorhome for a short distance, or short periods, may not be enough operating time to adequately replace the amp hours used to start the engine.

The alternator also maintains a charge to the house batteries. The function of the alternator is an electrical system voltage maintainer, not a battery charger. When the engine is operating the alternator maintains electrical system voltage relative to any loads, such as headlights and windshield wipers. When a heavy load is placed on the alternator, such as trying to charge dead batteries, the operating temperature of the alternator increases dramatically. Excess operating temperature of the alternator for extended periods of operation can lead to premature failure of the alternator.

If the house batteries are in a low state of charge, or dead, before traveling it is recommended to charge the house batteries with the inverter or an auxiliary battery charger.

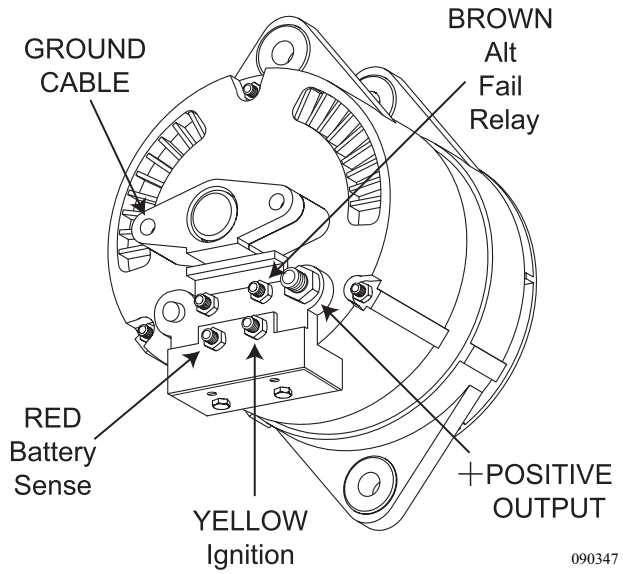


*200 Amp alternator.*

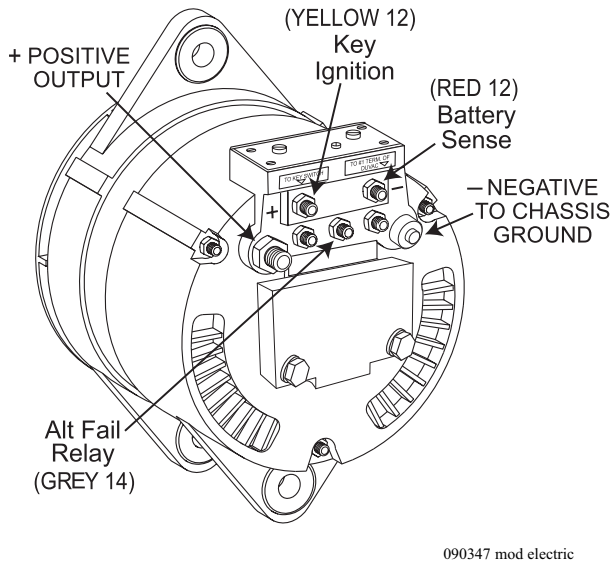


*270 Amp All-Electric Alternator.*

**NOTE: <u>Standard</u> is 200 Amp and <u>All-Electric</u> is 270 Amp.**

**Specifications:**

- The integral rectifier system utilizes 12: 50 Amp diodes mounted in multiple aluminum heat sinks for efficient heat dissipation during high-output operation.
- Aluminum housings
- Bi-directional fan
- Front bearing: 305 cartridge type
- Enclosed brush system
- Operation Ambient Temperature Range (-40º to 200º F)
- Negative Ground Configuration
- Regulator Adjustment Range 13.6 to 15.4 Volts
- Batteries may start to gas at 14.3 Volts
- Max. Operating RPM 8000

**Alternator Testing:**

- Check all wiring for burnt or loose electrical connections. Repair as needed.
- Check all grounds and electrical connections to be sure they are clean and tight.
  a. Alternator ground to chassis frame.
  b. Motor block ground to chassis frame.
  c. Chassis battery ground to chassis frame.
  d. Alternator positive output to isolator center terminal.
- Inspect the alternator for damage. A broken fan blade can damage an alternator or throw it out of balance.
- Check belt, pulley and fan for wear. Replace as needed.
- Never attempt to disconnect the battery or battery wire from the alternator with the engine running. This can cause damage to the alternator or the regulator.
- The pulley for the alternator should be torqued to 80 foot pounds.
- Chassis battery voltage with the engine OFF should range from 12.2 to 12.7 Volt DC.
- Chassis battery voltage with the engine at idle should range 13.5 to 14.2 Volts DC.
- The output of the alternator range is 13.6 to 15.4 Volts DC. Connect a volt meter to the (B+) terminal of the alternator and chassis ground. Idle the engine up to 1200 RPM.
- Connect a clamp-on amp-meter, if available, to the positive battery cable to verify the battery state/rate of charge.

***Alternator Testing Procedure***

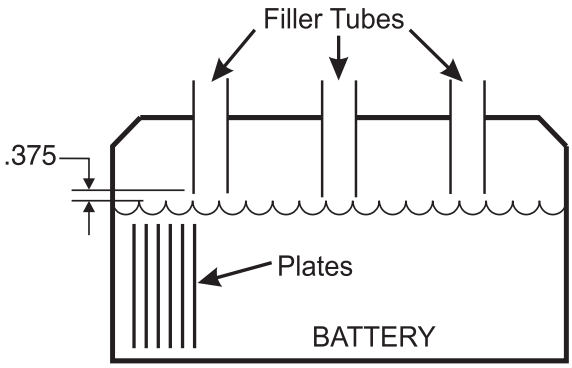


The distilled water level in the battery should be 3/8” below the filler tube. 020034

**NOTE: The alternator is not a battery charger. It is designed to maintain proper electrical system voltage. A battery with a low state of charge, or a dead battery, may overheat and damage the alternator.**

## STEERING COLUMN & SMART WHEEL

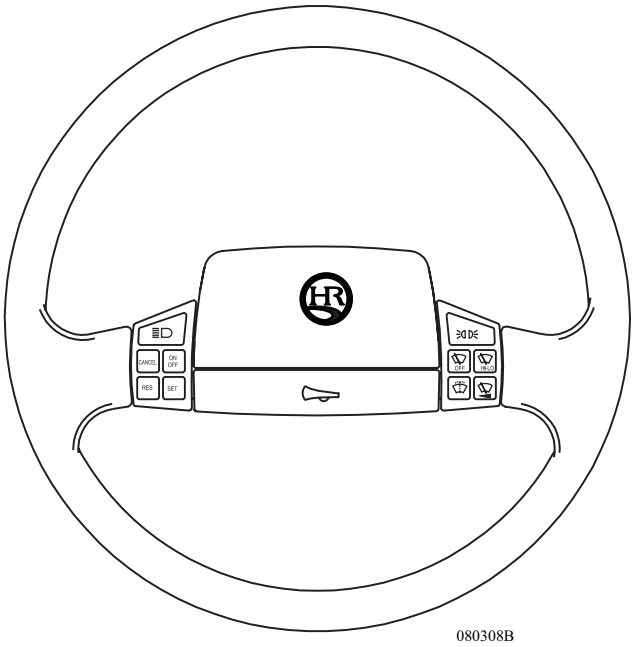


The Smart Wheel Steering Wheel System offers control of the horn, headlamp, marker lamp flash, cruise control and wiper functions from switch panels mounted on the steering wheel. The system consists of electronic modules enclosed in the steering wheel and the Master Controller typically located in the front run box.

Two wires utilizing a "clock-spring" connector in the steering column accomplish the communication between the steering wheel and the Master Controller while allowing steering wheel rotation. The two wires carry a multiplexed communication signal for the steering wheel. The Switch Panels generate unique signals as each switch closes and will then transmit them to the Master Controller. The Master Controller decodes the signal for the closed switch and operates the corresponding outputs for that function. Two additional wires provide power and ground for the steering wheel backlighting.

The 3 Amp fuse on the Master Controller is for backlighting the switch panel. LED's accomplishing backlighting with the ignition ON should last the life of the motorhome. The LED's only draw about 20 mA.

Another function of the smart wheel is the "High Idle" feature.

**To Use the High Idle Feature:**

1. With the Cruise Control off. Press and release the **Resume** button. Each time the button is pressed and released, the idle will rise in RPM's, between 600 to 800 RPM. To lower the idle, press and release the **Set** button. Engine idle speed will decrease in RPM's increments.
2. With the Cruise Control on, press and release the **Resume** button once. Engine speed will increase to 900 RPM. Push and hold the Resume button, engine speed will increase to 1500 RPM. Use cancel or turn the Cruise Control off to return the engine to an idle.
3. With the Cruise Control on, press the **Set** button once. Engine will increase to 1150 RPM. Press and hold the **Set** button, engine speed will decrease to 850 RPM. Use cancel or turn the Cruise Control off to return the engine to idle.

**NOTE: The transmission will not shift into gear if the engine RPM is at or above 900. The display will flash "6" indicating the engine RPM is excessive. Select "N" and lower the engine RPM.**

## Smart Wheel Operation

**Functions and an operational description for the smart wheel are as follows:**

**HORN:**
The horn bar on the steering wheel will send the appropriate signal to the Master Controller causing the HORN output to activate while the switch is pressed.

**HEADLAMP FLASH:**
When the headlights are **ON**, pressing the switch will turn the headlights off as long as the switch is pressed. Similarly, when the headlamps are **OFF**, pressing the switch causes the headlights to illuminate as long as the switch is pressed.

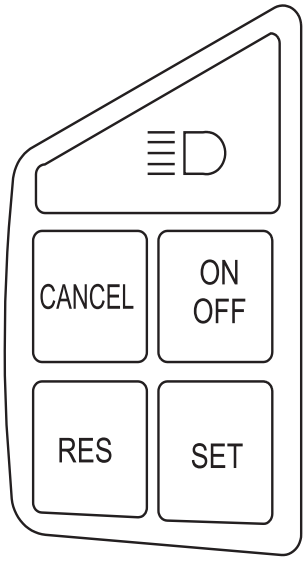

090270

**CRUISE FUNCTIONS:**

- **CRUISE CANCEL -** Signals the cruise system to disengage without losing the current speed memory setting.
- **CRUISE ON/OFF -** Cycles the Cruise system ON and OFF.
- **CRUISE RESUME -** Actuates the Cruise Resume function of the engine controller.
- **CRUISE SET -** Actuates the Cruise Set function of the engine controller.

**WARNING: Do not use cruise control in heavy traffic or on roads that are winding, slippery or unpaved. Do not shift the transmission into "N" (Neutral) with the cruise control on as high engine RPM run up will occur until the cruise control is turned off.**

9

## Wiper Function

The windshield wipers are driven by one motor and mechanically synchronized.

Any wiper function activation generates a "**Headlamp On**" signal from the Master Controller. This will only reset by turning off the ignition or by activating, and then deactivating, the dashboard headlamp switch.

**MARKER LAMP FLASH:**
This function is the ICC (Interstate Commerce Commission) courtesy lamp. When the headlights are **ON**, pressing the switch causes the taillights and all marker lights to go off as long as the switch is pressed. Similarly, when the headlights are **OFF**, pressing the switch causes the marker and taillights to illuminate as long as the switch is pressed.

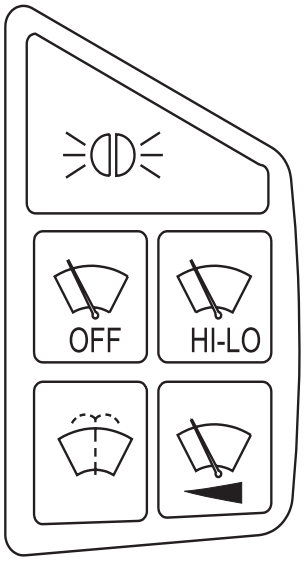

090270

**WIPER OFF:**
Cancels all wiper operations. Wiper function is cancelled when the ignition is off.

**WIPER Hi-Lo:**
When the button is pressed, the headlights come on for safety and activate the wipers on **Low** speed. If the switch is pressed again, the wipers will switch to **High** speed. Subsequent pressing of the switch will alternate wiper operation between **low** and **high**. Pull the headlight switch on then off to turn off the headlights or turn off the **Ignition** switch.

**WIPER WASH:**
Activates the wash pump relay while the switch is pressed. Additionally, if none of the wiper functions (**Wiper Lo/Hi** or **Variable**) had been previously selected, the Low Speed Wiper will be activated for a period of approximately three wiper cycles after the switch is released. If any of the latching wiper functions (**Wiper Lo/Hi** or **Variable**) had been previously selected, the wipers will continue to run in the selected mode after the wash switch is released.

**WIPER VARIABLE:**
Operation of the **WIPER VARIABLE** switch causes the **Low** speed wiper function to activate for one wipe. If the switch is pressed again within approximately 30 seconds, the **Low** speed wiper function activates again and repeats at an interval determined by the time between the last two operations of the switch. Additional switch operations will shorten the cycle. Activation of any other wiper mode cancels the variable mode. The effect for the driver is this: In light rain or mist conditions, the driver presses the switch once when the windshield first needs clearing. When the windshield requires clearing for the second time, the driver presses the button again setting the timed interval between subsequent wipes required by the current conditions. To extend the wipe interval, press the intermittent switch twice more or switch the wipers off then use the same method to set the desired interval.

Tilt and telescope steering wheel control lever is located on the steering column.

- To tilt the steering wheel, pull the lever up. Tilt the steering wheel where you want it. Release the lever and it will lock the steering wheel in the new position.
- To telescope the steering wheel, push and hold the lever down. Push down or pull up on the steering wheel until the wheel is in the desired location. Release the lever and the steering wheel will lock in the new position.

The turn indicator and headlight high/low dimmer control lever is located on the steering column.

- Pushing the lever forward will activate the right turn indicator circuits when the ignition is on.
- Pulling the lever down will activate the left turn indicator circuits when the ignition is on.
- Pulling the lever up will select high/low beam circuits when the headlights are on.

**Hazard Flashers:**
- The flasher button is located on the steering column.
- To turn the four way flasher on, pull **OUT** on the flasher button. The turn signal alarm will sound.
- To shut off the flasher, push the button **IN**.

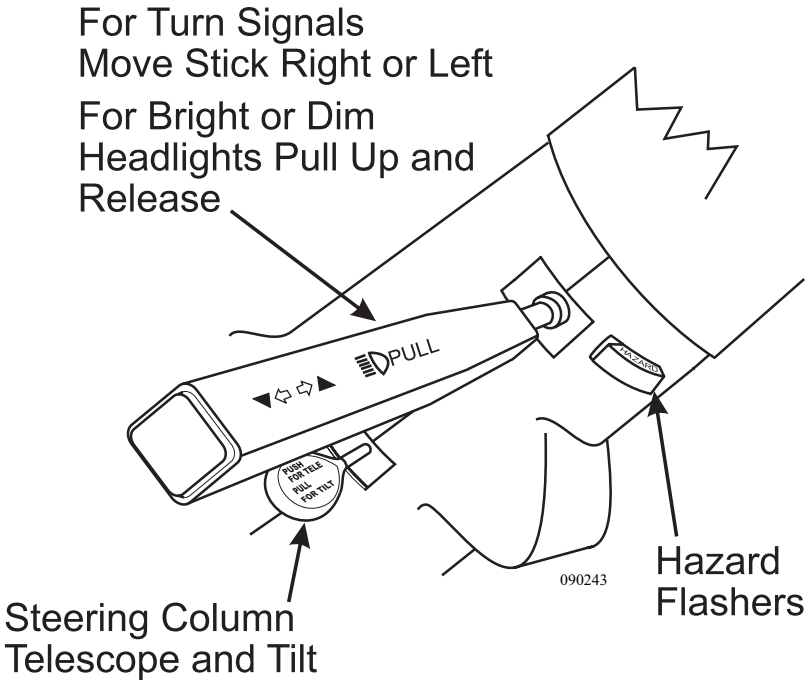

## CONSOLE
### *Transmission Shift Selector*

**Transmission Key Pad:**

The function of each position of the keypad push-button shifter is as follows:

- Selects **NEUTRAL** by pressing **N**. The area around the **N** button has a raised ridge so the driver can orient his hand to the Neutral button by touch.
- Selects **REVERSE** gear by pressing **R**.
- Selects the forward **DRIVE** range by pressing **D**. The highest forward gear (**6**) appears on the display and the transmission will shift to the first gear. Gear "**6**" will remain on the display through subsequent upshifts or downshifts.
- The **UPSHIFT** and **DOWNSHIFT arrow** buttons are used to select a higher (if not in sixth gear) or lower (if not in first gear) forward range. These buttons are not functional in **NEUTRAL** or **REVERSE**. One press changes the gear selected by one range. If the up or down button is held continuously, the range will continue to change up or down until the button is released or until the highest/lowest possible gear is selected.
- The **Mode** button enables economy mode.

  - **To Enter Economy Mode:** Press the **MODE** button. The LED will illuminate.

  - **To Exit Economy Mode:** Press the **MODE** button. The LED will extinguish.

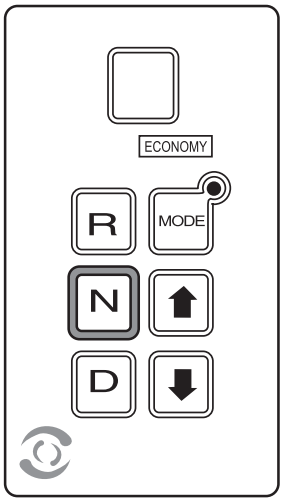

080355c

**Economy Mode:**

Economy mode affects the upshift schedule 3-4, 4-5, 5-6 and downshift schedule 6-5, 5-4, 4-3. During highway driving, with the cruise control set between 55 and 65 miles per hour, setting the transmission to economy mode will eliminate about 99% of transmission downshifts from sixth to fifth when incurring a slight incline or overpass.

In city driving, with the transmission set to economy mode, the transmission will upshift approximately 200 RPM sooner using less fuel with reduced engine noise. Do Not use economy mode while traveling in mountain terrain. The lower RPM shift schedule will reduce the flow of antifreeze, lubricating oil and air flow through the radiator resulting in increased transmission and engine temperature.

**CAUTION: Do not use the economy mode in heavy stop and go traffic or mountainous terrains. Frequent shifting occurs when in economy mode while using heavy throttle, increasing transmission fluid temperature. Exit economy mode until road conditions improve.**

**NOTE: When the Auxiliary Braking device is used, the display will change to a default reading of 2 or 3. This setting is pre-selected at the factory and can only be altered by an authorized Allison Service center. The transmission is not actually in second or third gear. This is only a reference point so the transmission will optimize engine braking efficiency.**

## Parking Brake

The parking brake system is activated when the push-pull control knob (located on the driver's left console panel) is pulled. When the knob is pushed, the brake is released. Prior to driving, allow time for the air compressor to build up sufficient air to shut off the air warning lamp.

**WARNING: There is a possibility the parking brake can be accidentally released if the air system is charged. It is advised to fabricate a device to be placed under the parking brake handle preventing small children and pets from releasing the brake when parked. A wooden clothespin clasped to the shaft will be suitable.**

park brake.eps

## Leveling Controls

**RVA Control (Hydraulic Systems):**

The three-point hydraulic leveling system is operated from the control module to manually or automatically level the motorhome. The control features a multiple warning system with flashing lights and a "bong" alarm to alert of a jack down.

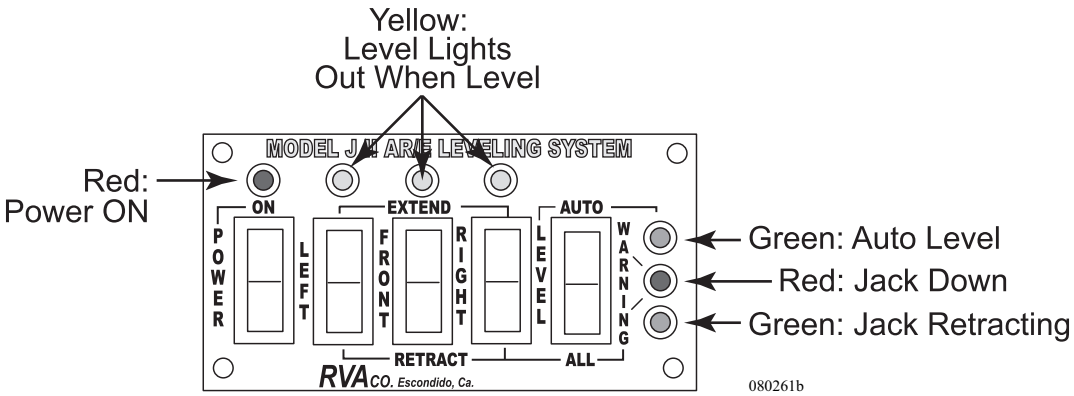


080261b

**HWH Control (Air Systems):**

The touch panel, computer controlled, four-point air leveling system controls the computerized air-leveling operations. The ignition must be ON in order for the leveling system to function.

**NOTE: The air suspension will NOT operate unless the ignition is ON.**

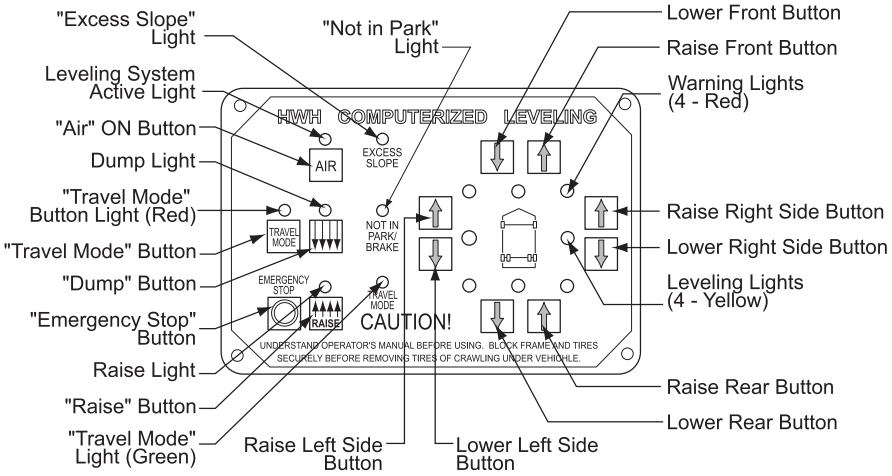


080262b

## DASH -
### *Indicator Lamps*

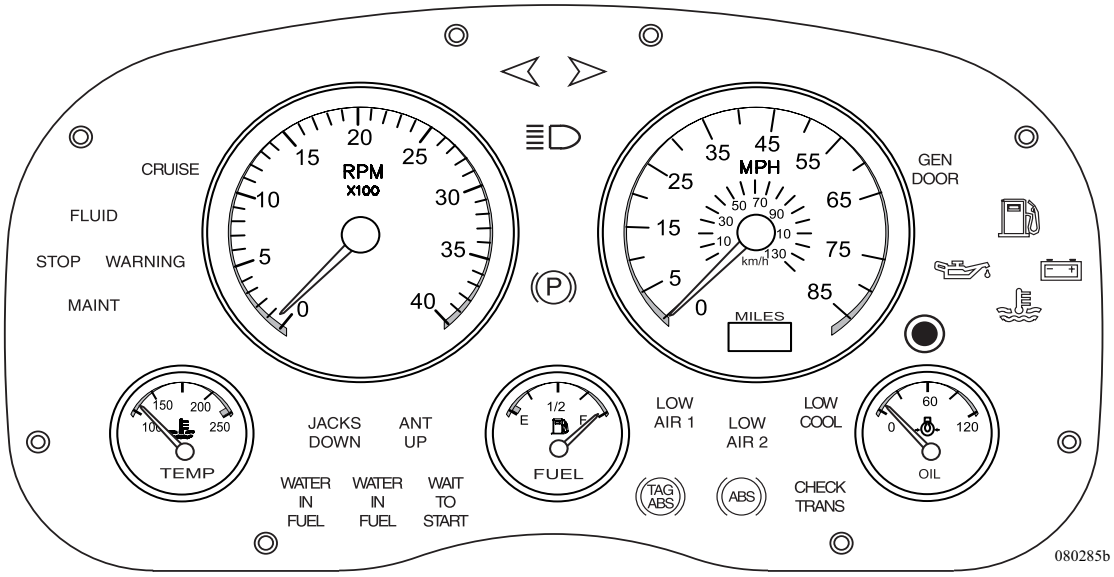


**NOTE: Some of the items depicted in the dash drawing are not used depending on floorplans and equipment options.**

**Listed from left to right:**

**CRUISE:**
Cruise control is activated.

**FLUID:**
Not used.

**STOP:**
Alerts of severe out of range condition within the engine protection circuits. Pull over and stop as soon as possible. Shut-off engine to avoid engine damage.

**WARNING:**
An “out of range” condition exists within the engine protection circuits. Stop coach, check all fluid levels.

**MAINT:**
An “out of range” condition exists within the engine protection circuits. Stop coach and check all fluids. Contact your nearest Cummins dealer.

**LEFT ARROW - Audible Turn Indicators:**
Left turn indicator circuits active. Alarm cancels when service brake is applied.

**RIGHT ARROW - Audible Turn Indicators:**
Right turn indicator circuits active. Alarm cancels when service brake is applied.

**HEADLIGHT BEAM:**
High beams when illuminated.

**PARK BRAKE:**
Indicates parking/emergency brake is applied.

**LOW AIR 1:**
Indicates air tank pressures are out of operating range. Check air pressure gauge.

**LOW AIR 2:**
Indicates air tank pressures are out of operating range. Check air pressure gauge.

**LOW COOL:**
Indicates coolant level in the overflow tank is below acceptable level.

**TAG ABS:**
ABS event or a malfunction in the ABS on the tag axle has occured.

**ABS BRAKE:**
Indicates ABS possible fault in the ABS Brake system. Indicates fault codes for service technicians.

**CHECK TRANS:**
Alerts of problems related to the Allison Transmission. The light should momentarily illuminate when the ignition is switched ON. When starting the-lamp will extinguish indicating the circuits are working properly. If the lamp fails to illuminate or remains on, the transmission needs to be checked immediately. Contact the nearest Allison dealer.

**GEN DOOR:**
The generator door is open.

**LOW OIL PSI symbol:**
Indicates low oil pressure, not the amount of oil in the crankcase. Stop the motorhome. Check oil pressure gauge and oil level.

**LOW FUEL symbol:**
Fuel level is becoming low.

**HIGH WATER TEMP symbol:**
Indicates high water temperature. Check water temperature gauge. Stop coach and check coolant level.

**BATTERY symbol:**
Indicates a failure within the alternator charging system.

## *Gauges*

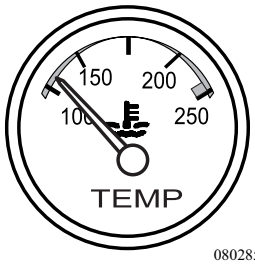


080285b

**COOLANT TEMP:**
Under average conditions the gauge will read between 180° F and 205° F. Monitor this gauge frequently when **CLIMBING HILLS, TOWING OR IN HIGH AMBIENT TEMPERATURES.** If the gauge shows that an over-heating condition exists (the needle moving above the 212° F area) IMMEDIATE ACTION should be taken to avoid engine damage.

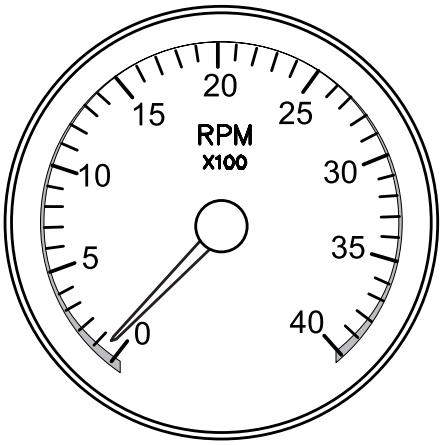


080285b

**Overheating may be a result of any of the following conditions:**
- Low coolant level.
- Hydraulic fan motor failure.
- Mechanical failure of hoses or belts.
- Blocking of charge air cooler fins.
- Climbing a long hill on a hot day.
- Towing a heavy trailer.
- Idling for long periods of time.

**TACHOMETER:**
Displays engine speed in revolutions per minute (RPM).

**INFORMATION: Please refer to manufacturer's instructions for specific pressure recommendations.**

**FUEL:**
Fuel gauge will register approximate fuel level in tank, when ignition switch is in run position.

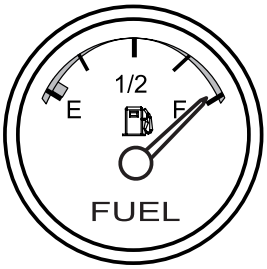

080285b

**NOTE: Fuel mileage varies with driving style and road conditions. Always average more than one tank of fuel to obtain a more accurate figure. The diesel Generator and the Aqua-Hot system both use fuel from main tank and will affect fuel mileage figures. Diesel Generators and Aqua-Hot will not operate below 1/4 tank to ensure there is enough fuel to run main engine.**

**SPEEDOMETER:**
Indicates the speed of the motorhome. The gauge indicates MPH and KPH. Located on right side of instrument cluster.

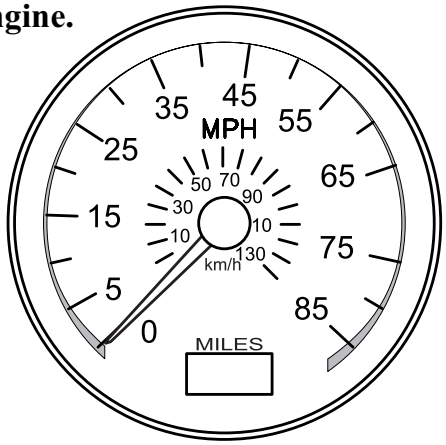

080285b

**ODOMETER/TRIP METER:**
Used to toggle between the odometer and trip meter. Holding the button down for two seconds will reset the meter.

**OIL PRESSURE:**
Indicates oil pressure, not the amount of oil in the engine. Please refer to manufacturer's instructions for specific pressure recommendations.

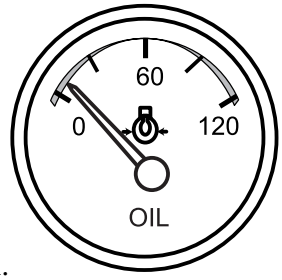


**TRANS TEMP:**
Shows temperature of transmission fluid. Normal transmission operating temperature is between 160 and 250° F. The maximum transmission to cooler oil temperature is 300° F. Do not let the transmission temperature exceed 275° F. If excessive temperature is indicated, stop motorhome and shift to neutral. Accelerate engine to 1200 - 1500 RPM and allow temperature to return to normal.

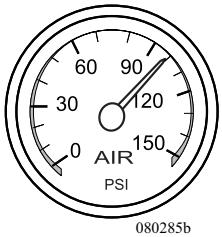

080285b

**AIR PRESSURE GAUGE:**
Uses two needles to indicate air system pressures. One needle indicates air pressure of the front air tank. The other needle indicates air pressure of the rear air tank. The normal air system operating pressures are 105 to 120 psi. These air pressures are preset at the factory. If a problem occurs with either air system not maintaining normal operating pressure, it is an indication of a malfunction in the air system. Use caution and stop the motorhome in a safe area. Contact your dealer immediately.

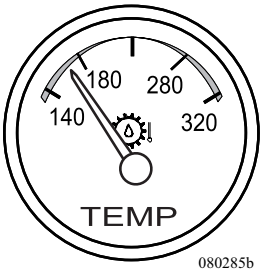

080285b

**NOTE: It is not safe to drive the motorhome with low air pressure. Damage can occur to the suspension and driveline, also affecting operation of the air brake system.**

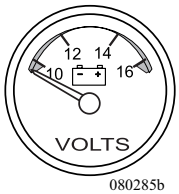

080285b

**VOLTMETER:**
Shows the charge condition in the chassis battery. The normal voltage with the ignition switch ON and the engine OFF varies between 12.0 and 13 Volts. With the engine operating without a heavy load, the battery charging voltage is about 14.0 Volts. Battery readings of less than 10.5, or more than 15 Volts, usually indicates a battery or electrical system problem.

**TURBO BOOST:**
Indicates boost pressure produced by the engine turbocharger.

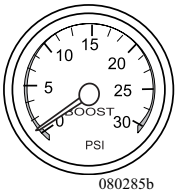

080285b

**NOTE: Layouts may vary with difference in models or options.**

## *Switches*

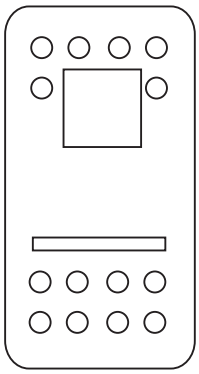
060066

*Typical Switch*

**AIR DUMP:**
Deflates air suspension (Hydraulic Leveling only).

**Dock Light Switches:**
The dock light switches, located on the lower roadside armrest, will operate the roadside (D/S), Curbside (P/S), or all (ALL) dock lights. ALL will also include the Back-up Lights. The dock light switch in the bedroom operates the same as the ALL switch on the armrest.

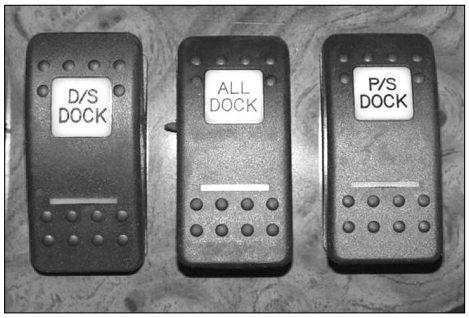

NavdockLTSW.Tif

**AQUA-HOT (Optional):**
Turns the Aqua-Hot diesel burner on.

**ATC:**
Activating the ATC switch allows greater engine torque during an ATC event.

**ALADDIN: Reset Storage Switch**
Master reset and storage switch for the Aladdin System. The switch should normally remain on.

**ALADDIN JOYSTICK:**
Used to control Aladdin commands.

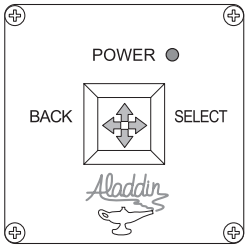

*Aladdin Joystick* 080377d

**BATT BOOST:**
The Battery Boost switch is used in the event the motorhome chassis battery has been drained or is at a low charge level where the engine will not start. This switch momentarily "jumps" the house batteries to the chassis batteries to assist in starting the engine.

**To Use the Switch:**

1. Hold the switch down for ten seconds. With the switch held down, turn on the ignition key. The battery volt gauge on the dash should indicate 12 Volts.
2. If voltage is sufficient continue to hold the switch down and try to start the engine. If the engine does not start, or voltage is not sufficient, the motorhome may require jump starting. See "Jump Starting."

**NOTE: There should be an audible click from the engine compartment when the solenoid engages.**

**CAUTION: The boost switch should not be held for more than 30 seconds. Damage to the boost solenoid may occur from overheating.**

When the battery boost switch is pressed it will ground the 12 gauge orange wire from the 1,000 Amp solenoid. A loud clicking noise should be heard when the solenoid engages. If the boost solenoid is inactive, locate the molex plug and start the troubleshooting process by removing the cover on the dash. It may be necessary to remove the wire from the battery boost solenoid and perform a continuity check from the front to the rear of the motorhome.

**BATTERY CUTOFF:**
Turns house battery power on to 12 Volt domestic fuse panels.

**BLOCK HEAT:**
This feature warms the engine for starting in sub-freezing or extreme cold temperature. Turning the switch on supplies 120 Volt AC power to the receptacle for the block heater cord. For efficiency, hook the motorhome to shore power when using the block heater receptacle.

**To Use the Block Heater:**

- Hook to shore power and plug in block heater cord to the receptacle.
- Turn on the Block Heat switch.

**NOTE: It is advised to prepare the engine for starting in sub-freezing temperatures by leaving the block heater plugged in overnight.**

**BRAKE:**
Activates the control solenoid for the engine brake system.

**BRAKE HI/LO:**
HI = All six cylinders. LO = Three cylinders.

**CEILING LIGHTS:**
Turns on forward halogen lights over front seats.

**CTY/HWY HORN**:
Selects either electric (city) or airhorn (highway).

**BAY LIGHTS:**
Turns on roadside compartment bay lights.

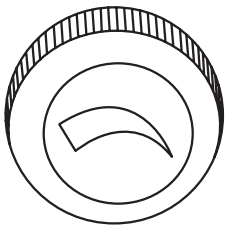
DIMMER
060209

**DIMMER/RHEOSTAT:**
Controls dash switch backlighting when headlight switch is on.

**DRVR SHADE:**
Operates the power sun visor located driver's side.

**ENGINE HEAT (Optional):**
The engine preheat loop is an integral part of the Aqua-Hot heating system. In cold ambient temperatures, use this feature to preheat the engine. The Aqua-Hot also supplies supplemental heating to the interior using heat created by the engine. While traveling, the water pump on the engine coolant will pass through the Aqua-Hot. When using the supplemental heating feature, use the Comfort Control thermostat to activate the desired heat exchangers.

**To Enable Engine Preheat:**
- Turn the Aqua-Hot switch on.
- Turn the Engine Heat switch **ON** to activate the engine preheat circulation pump. Circulating engine coolant through the engine preheat loop will adequately warm the engine to operate for easy starting.
- Allow approximately one to two hours (longer for colder, ambient temperatures) of engine preheating run time. The pump can be operated overnight if desired.
- Turn the engine heat switch **OFF** when engine preheating is not desired.

**NOTE: Layouts may vary with difference in models and options.**

**FANS HI/LO:**
Operates the two speed overhead fan for use with windshield defrosting, cooling and recirculation.

**FOG LTS:**
Operates the fog lights with the ignition key on and the headlights in the low beam position. The fog lights will go off when the headlights are switched to high beam.

**GEN ON/OFF:**
Starts and stops generator from the dash area.

**GRAB HANDLE:** Turns grab handle light ON/OFF.

**HEADLIGHTS:**
Pull to first click to activate parking lights. Pull to second click to activate headlights.

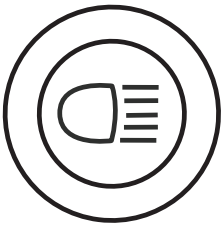
080416

**MIRR HEAT:**
Turns on the heaters in outside rear view mirrors. The mirror heaters should be used when defogging or deicing is needed. Mirror heat should not be left in the ON position unless continuous fogging conditions occur.

**MIRROR SELECT:**
Three-way switch that controls the positions on the mirror.
**T** (Up): Controls the top mirror.
**M** (Middle): Controls the center mirror.
**B** (Down): Controls the lower mirror.

**Top Mirror** = convex glass.
**Middle Mirror** = flat glass.
**Bottom Mirror** = convex glass.

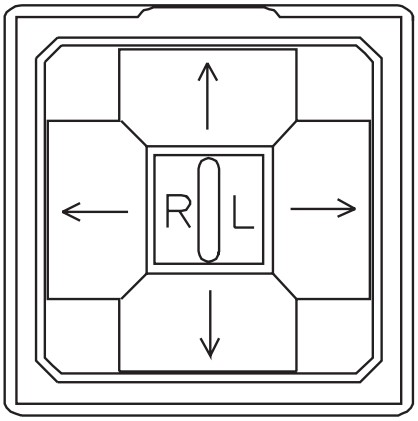

080378

**MIRROR ADJUST:**
After accepting delivery of the new motorhome it will be necessary to sit in the driver's seat and have the mirrors adjusted for accurate visibility. Use an Allen wrench to adjust mirror arm angle for best visibility. Make sure you can see out of both the driver and the passenger side mirrors before heading out on the road. Place the selector switch to the desired side. Use the outside directional ring to set desired angle. Place the switch in the center position to prevent accidental misadjustment.

**NAV ON/OFF:**
Turns the navigation system on and off.

**PASS SHADE:**
Operates the power sun visor, located on passenger side.

**PEDAL IN/OUT:**
After sitting in the driver's seat and making adjustments to the mirrors and steering wheel, use the Pedal In/Out switch to adjust the brake and throttle pedal to be either closer or farther away. Locate the switch on the left hand console panel marked Pedal IN/OUT. The switch moves the pedals inward or outward approximately three inches. If you need to move the pedals inward, just push the same switch in the opposite direction. When the pedals reach the end of their traveling distance the motor will stop. Release the switch.

**PORCH LIGHT:**
Turns the porch light.

**STEP:**
Turns power on or off to step. To leave the step extended when parked, open the door. After the step extends, turn the switch off.

**STEP COVER:**
The front door models are equipped with a sliding Step-Well Cover that is extended and retracted by two switch locations. One switch is located just inside the entry door on the passenger side armrest. The second switch is located on the center console marked "Step Cover."

**NOTE: Layouts will vary with difference in models and options.**

**TAG AXLE:**
Switch raises and lowers tag axle. In certain situations tag axle may require to be in **UP** position. Raise the tag axle when making sharp turns under 5 mph.

**When using tag axle switch:**
- Tag axle down, bar light not illuminated.
- Tag axle in up position, bar light illuminates.

**NOTE: DO NOT drive the motorhome over five MPH with the tag axle raised. The manufacturer will not be held responsible for any damage that may occur from driving with the tag axle raised.**

## DASH AIR CONDITIONER & HEATER CONTROLS

The system is designed to only provide heating, cooling and defrost for the pilot and co-pilot area. The system is not capable of heating or cooling the entire motorhome.

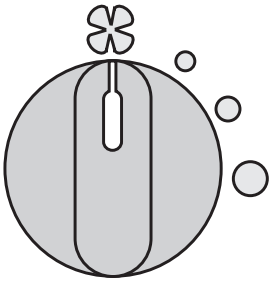

**Blower Control Switch:**

This switch controls the four speeds of the blower motor. This is one of the best and most effective ways of controlling temperature. The blower will not activate until the Mode Control Switch is set to any position other than Off.

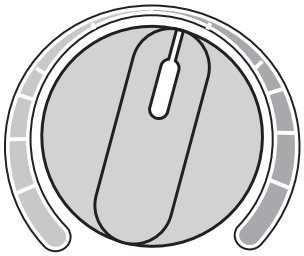

**Temperature Control Switch:**

Setting the switch to the **Red** zone controls an electric water valve regulating the amount of engine coolant passing through the heating coils in the system. Rotating to the **Blue** zone sets the cut-in/cut-out temperature of the air conditioning compressor on the engine.

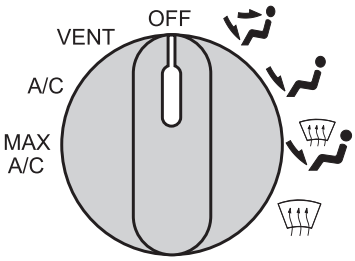


080305

**Mode Control Switch:**

This switch directs air flow by opening or closing damper doors. Use the Mode Control Switch to direct airflow where it is needed to maximize comfort in the cockpit area.

9

090277b

**MAX A/C -** Recirculated air is drawn from the passenger area and discharged through the dash louvers.

**A/C -** Fresh Air is drawn from outside into the system and discharged through the dash louvers.

**VENT -** Fresh air is drawn in and discharged throughout the dash louvers.

**OFF -** The blower motor does not operate. The fresh air inlet door will close, minimizing outside air infiltration into the motorhome.

**BI-LEVEL -** Fresh air is drawn in and discharged through the dash and the floor louvers.

**FLOOR -** Fresh air is drawn in and discharged through the floor louvers. A small amount of air discharges through the defrost vents.

**MIX -** Fresh air is drawn in and discharged through the floor and defrost louvers. The A/C system operates to dehumidify the discharged air.

**DEFROST -** Fresh air is drawn in and discharged through the defrost louvers. The A/C compressor operates to dehumidify the discharged air.

**Heat and Defrost Operation:**

The air conditioning compressor operates in all modes except **VENT**, **FLOOR** and **OFF** to dehumidify the air. Rotate the temperature control switch to set discharge air temperature.

- Set the Mode Control Switch to the desired position.
- Set the Temperature Control Switch to the **Red** zone.

**A/C Operation:**

The air conditioning compressor operates in all modes, except vent, floor and off, to dehumidify the air. Rotate the temperature control switch to set discharge air temperature.

- Setting the Mode Control Switch to **A/C** will allow outside air into the system.
- Setting the Mode Control Switch to **MAX A/C** will recirculate inside air. When maximum cold air is desired, select this position.
- Set the Temperature Control Switch to the **blue** zone.

**NOTE: The temperature control switch must be set to the blue zone for cool air.**

**NOTE: Activate the A/C system monthly to keep internal components of the compressor lubricated.**

**Winter Use:**

- De-ice the windshield using the **DEFROST** mode.
- The system will heat up faster with a slower blower speed until normal engine operating temperature is obtained.

**Summer Use:**

- Close all windows and vents preventing hot and humid outside air from entering the motorhome.
- **MAX A/C** and **HI** blower will provide quick cool down.
- Using a lower blower speed will produce cooler air.

**Operating Tips and Hints:**

- Air intake and discharge temperatures are greatly affected by ambient temperature and relative humidity.
- A large amount of cooling capacity is used to dehumidify air as well as cool it. After three to five minutes of A/C compressor operation, the discharged air temperature should be approximately 30º F cooler than the fresh or recirculated air entering the A/C system.
- The air system on the motorhome must have adequate pressure to operate the vacuum generator or damper doors will not function.
- At the beginning of the day, activate the compressor with the engine at idle. This will avoid sudden high speed activation resulting in damage from lack of internal compressor lubrication.
- The dash A/C and heater system should be used monthly to keep the compressor lubricated.

**Troubleshooting:**

The dash A/C/Heat system uses a combination of compressed air (developed by the chassis system), vacuum air (developed by the vacuum generator) and electric relays and vacuum switches. Therefore, any repair can be classified in one of five categories:

- **Electrical**
- **Vacuum**
- **Air Conditioner**
- **Heater**
- **Defroster**

The following information is provided to assist in troubleshooting common operational problems which may occur.

**No Heating:**

1. A/C switch is turned off.
2. Blower switch is turned off.
3. Verify the proper engine coolant level.
4. Verify that the engine is reaching operating temperature.
5. Verify engine coolant is reaching water valve attached to unit.
6. Verify operation of water valve to permit engine coolant to pass through valve to heater core.
7. Check unit fuses.
8. Check power supply to water valve and grounding.
9. Check wiring.
10. Engine thermostat faulty.

**No Cooling:**

1. Check blower is operating, A/C switch is in **A/C** or **Max** position, temperature control is turned to **Max** cooling (blue area).
2. System fuses are not blown.
3. Condenser fan is operating.
4. Check power supply to unit and grounding of system.
5. Check wiring.
6. Coolant valve is leaking.
7. Drive belt is loose or broken.
8. Compressor Clutch is inoperative, will not engage.
9. Expansion Valve is faulty or frozen.
10. Thermostat control is faulty.
11. Mode control switch is faulty.
12. Compressor is faulty.
13. Loss of refrigerant.

**Reduced Cooling:**
1. Coolant valve not operating correctly.
2. Air passages are obstructed.
3. Loose or worn drive belt.
4. Check blower and select switch.
5. Thermostat control valve is faulty.
6. Expansion valve is faulty.
7. Compressor is faulty.
8. Low refrigerant charge.

**Blower Does Not Operate or Runs Slow:**
1. Check fuses.
2. Check for loose or corroded connection.
3. Check wiring.
4. Check to ensure ignition switch is “ON.”
5. Check blower and select switch.
6. Motor shaft has seized.
7. Blower wheel is out of alignment.

**Damper Doors Do Not Operate:**
1. Does the motorhome air tank have pressure?
2. Is the vacuum generator being powered and producing a vacuum?
3. Check the vacuum line entering the unit for vacuum.
4. Check that the vacuum solenoid mounted on unit is receiving power from the mode switch. If operating properly, the vacuum solenoid will feel hot if current is engaging the solenoid.
5. Check the mode switch.
6. Check wiring.
7. Check for a pinch in the vacuum line leading to the vacuum motor that operates the damper door in question.

**Air Conditioner Refrigeration Components:**

**Compressor -** The compressor is belt driven from the engine through the compressor and electronic clutch pulley. The compressor will pump freon from a low pressure gas into a high pressure, high temperature gas. This is the start of the refrigeration process.

**Condenser -** The condenser in front of the radiator is made of coils and fins which provide rapid transfer of heat from the refrigerant as external air passes over the coils. The high pressure gas is changed to a high pressure liquid.

**Condenser Fan** - A steady flow of cooling air is maintained across the condenser during system operations. The fan is part of the hydraulic system.

**Receiver-Drier -** Freon leaves the condenser, enters the dehydrator and is stored until needed. The drier filters out moisture in the system. It only takes one drop of moisture to cause a malfunction in the cooling unit.

**Expansion Valve** - The expansion valve suppresses the refrigerant into the evaporator according to the cooling requirements. The pressure is reduced in the restrictive effort of the expansion valve. A part of the valve is the capillary tube assembly. The capillary tube is the sensing bulb at the outlet of the evaporator.

**Evaporator** - A tube core and fins are used in the evaporator similar to the condenser. Air is blown through the fins to allow the evaporator to cool and reduce the pressure.

**Blower and Motor** - Just as the condenser has a fan, the evaporator has a fan called the blower. The blower will draw air from the cab area and force the air over the evaporator coils and fins. This forced air will ensure continuous vaporizing of the R134a.

**Relays and Switches** - Both electronic and vacuum switches are used in the control and operations of the system.

**Chemical Stability:**

The air conditioning system life and efficient operations depends upon the chemical stability of the refrigeration system. The refrigeration system is made of Refrigerant-R134a and Polyakylene Gycol (PAG) synthetic lubricant. It is very important that all materials contained within the refrigerant system be chemically compatible.

The only suitable compound for use with R134a is PAG. The total amount of PAG within the refrigerant system is approximately 18% of the total refrigerant in the system.

How much refrigerant is in the system? How much should be used when charging? You will need 1 oz. of PAG for each 7 feet of hose after the first 15 feet of hose. Roughly, a 40 foot motorhome will use 92 feet of refrigerant hose. Take 15 feet off the measurement and the result would be 77 feet. This 77 feet is then divided by 7 for total of 11. This represents the number of ounces of PAG oil needed for the A/C system (11 oz.).

Carrying the formula one step further, the 11 oz. equal approximately 18% of the entire system. The total will equate to approximately 61 oz. or 3.8 lbs. of R134a.

High pressure readings are another way to determine the amount of charge. The ambient temperature reading is measured one inch away from the condenser. The ambient temperature reading, plus 40° F, will equate to a value from the pressure table.

**EXAMPLE:**
**90° F. 1 inch from condenser + 40° F = 130° F ----- 198.90 PSIG -**
On fully charged system the expected pressure that should be seen on the HIGH-SIDE gauge will be around 200 PSIG.

**NOTE: All systems are charged at the factory with 4.0 lbs of R134a.**

| TEMPERATURE | PSI GAUGE | TEMPERATURE | PSI GAUGE | TEMPERATURE | PSI GAUGE |
|---|---|---|---|---|---|
| 16° F | 15.69 | 60° F | 57.47 | 112° F | 151.30 |
| 18° F | 17.04 | 65° F | 64.10 | 114° F | 156.10 |
| 20° F | 18.43 | 70° F | 71.19 | 116° F | 161.10 |
| 22° F | 19.73 | 75° F | 78.75 | 118° F | 166.10 |
| 24° F | 21.35 | 80° F | 86.80 | 120° F | 171.30 |
| 26° F | 22.88 | 85° F | 95.40 | 122° F | 176.60 |
| 28° F | 24.47 | 90° F | 104.40 | 124° F | 182.00 |
| 30° F | 26.10 | 91° F | 106.30 | 126° F | 187.50 |
| 32° F | 27.79 | 92° F | 108.20 | 128° F | 193.10 |
| 34° F | 29.52 | 93° F | 110.20 | 130° F | 198.90 |
| 36° F | 31.32 | 94° F | 112.10 | 135° F | 213.70 |
| 38° F | 33.17 | 95° F | 114.10 | 140° F | 229.40 |
| 40° F | 35.07 | 100° F | 124.30 | 145° F | 245.80 |
| 42° F | 37.03 | 102° F | 128.50 | 150° F | 263.00 |
| 44° F | 39.05 | 104° F | 132.90 | 155° F | 281.00 |
| 45° F | 40.09 | 106° F | 137.30 | 160° F | 300.10 |
| 50° F | 45.48 | 108° F | 141.90 | 165° F | 320.00 |
| 55° F | 51.27 | 110° F | 146.50 | 170° F | 340.80 |

psi gauge_temp.eps

**R-134a Refrigerant:**

R134a is classified non-explosive, non-flammable and non-corrosive. There is hardly any odor and it is much heavier than air. R134a is ozone friendly; however, it is not technician friendly. Proper care in handling and adequate ventilation must be observed. Under normal atmospheric pressures and temperatures R134a will evaporate so quickly it will freeze anything it comes in contact with. The open container boiling point for R134a is minus 21.7º F. This low boiling point makes for an ideal refrigerant. The tremendous amount heat transfer which occurs when a liquid boils, or vapors condense, forms the basic principles of all A/C systems. The amount of heat required to raise or lower the temperature of one pound of water by 1º F equals one British Thermal Unit (BTU). The BTU is the standard measurement of an air conditioner system.

**Safety and Handling of 134a and Pag Oil:**

- When working with any refrigerant system wear eye protection and hand protection.
- Pag Oil irritates the skin. Flush with water immediately if in contact with any body part.
- Ensure any service work performed on the A/C system is in a well ventilated work area.
- Keep open flame away from service area. The discharge of a refrigerant gas near an open flame can produce a very poisonous gas.

**NOTE: O-rings used in a 134a system are Hydrogenated Nitrile Butadiene Rubber (HNBR). These are green in color and required for the 134a system.**

**A/C Heater:**

The A/C system will also produce heat to warm the air in the dash area. Much like the refrigeration side of the system, a liquid will be used in the process. This liquid is the engine coolant. The coolant is passed from the radiator to an electronic water valve. The water valve, when open, will allow the coolant to flow through the heater core. The heater core is tubing and fins. Air is drawn into the system by a blower motor through the outside recirculation door opening. Air is blown through the A/C evaporator core and then through the heater core. When the temperature control is in the **WARM** position coolant flows through the heater core. When the temperature is in the **COOL** position coolant flow bypasses the heater core. In either position the air flow is felt at the discharge vents.

**Diagnosis of Electric Water Valve:**

Theory of Operation: The thermostat is a potentiometer. The water valve, which controls the water flow to the heater core, is opened and closed by a stepper motor mounted on the water valve. A control module compares the output voltage from the potentiometer to the feedback for the stepper motor of the water valve. The control module then drives the motor to within ½ volt of the control potentiometer voltage.

**Functional Test:**

- Start and operate the engine until the water reaches normal operating temperature.
- Set the HVAC temperature control to the full hot position.
- The discharge air outlets should have hot air.
- Rotate the temperature control to full cold position.
- Allow 10 minutes for the temperature to stabilize.
- The discharge air outlets should have cold air.

**No Heat:**

- Check the blower and air mode operations. Repair prior to proceeding.
- Verify the engine is reaching normal operating temperature.
- Check the inlet hose at the water valve. The hose has hot water at the valve inlet. The inlet water temperature should be approximately same as the engine coolant temperature.
- With the temp control on full hot position, check the outlet hose of the water valve. The hose should be at engine water temperature.

**Vacuum Generator:**

The vacuum generator is important to the operation of the dash heating and A/C systems. This provides the vacuum to open and close the vacuum switches. When the vacuum generator is operating it creates 15 inches of vacuum that is stored in a reservoir ball. Most dash heater and A/C systems will only require 10 inches of vacuum to operate the switches. The output from the reservoir is sent to the vent control knob. The control knob will then direct the vacuum operation to the appropriate vacuum switch to open or close vents and switches. The vacuum generator uses the air from the front air storage tank through a ¼ inch red air line. Whenever the ignition is ON, and the A/C is operating, the vacuum generator will operate.

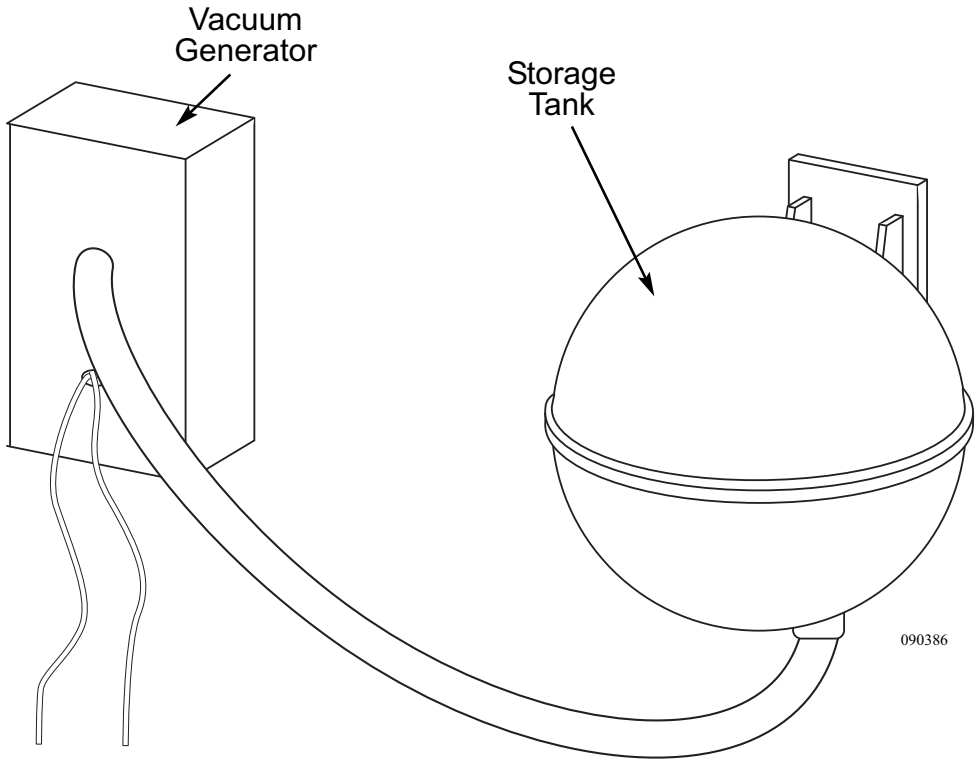

## SYSTEMS CONTROL CENTER

Located behind an overhead access panel in a bay compartment is the systems control center. The control panel consists of the following components.

- **Engine Vehicle Interface Module (VIM) & Transmission Electronic Control Unit (ECU):**
  The VIM and ECU modules perform a variety of functions. The modules electronically monitor and control engine and transmission functions and operating conditions.

- **Anti-lock Brake Control Module (ABS):**
  The ABS control modules monitor road speed of each wheel and braking conditions. The module located here monitors and controls front and drive axle ABS functions. The Tag Axle ABS module is located above the transmission tail shaft housing. The ATC (Automatic Traction Control) system is also part of the ABS system.

- **Air Leveling Control Module:**
  The Air Leveling Control Module operates air solenoids that are mounted in manifolds located above each axle. The solenoids control Raise, Lower and Travel functions.

- **Air Leveling Sensor:**
  This sensor monitors level conditions of the motorhome then sends this information to the Air Leveling Control Module.

- **Hydraulic Level Sensor:**
  This sensor monitors level conditions of the motorhome then sends this information to the **Hydraulic Leveling Control Module** mounted in the driver's console.

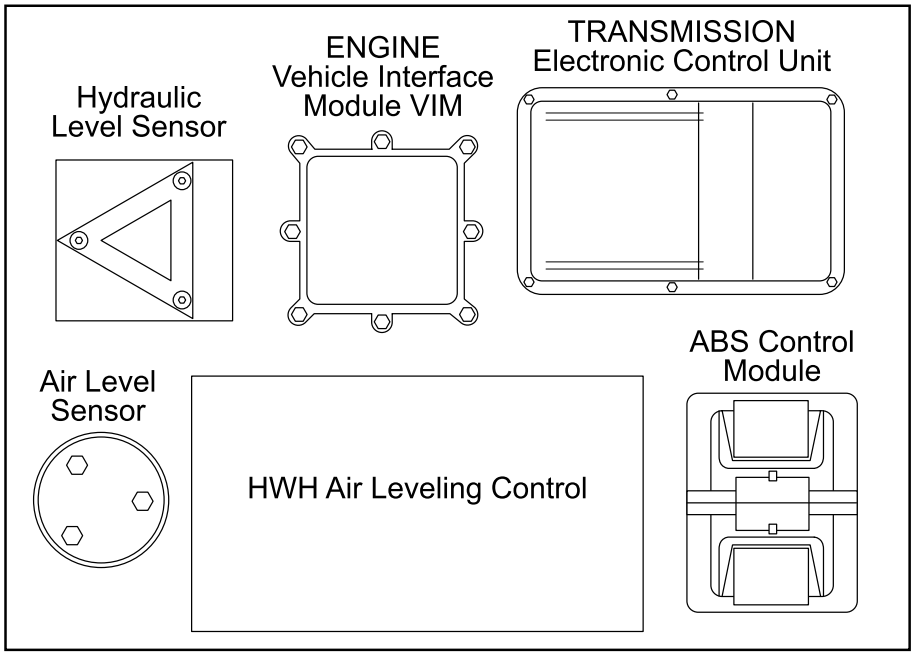


090420

## DIAGNOSTIC PLUG LOCATION

Eaton, Cummins and Allison diagnostic plugs are located under the left side of the dash.

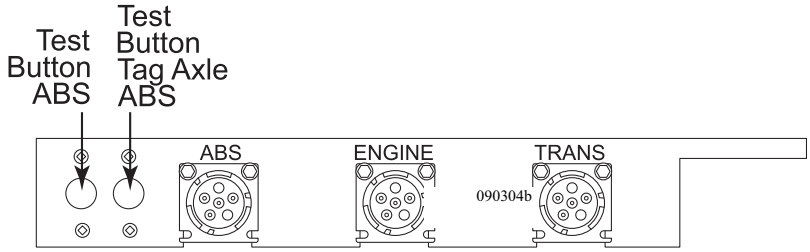


**Diagnostic Fault Codes:**

The engine ECM will record three types of fault codes; Electronic Control System Faults, Protection System Faults and Maintenance Indicators. All faults recorded will be **ACTIVE** or **INACTIVE**. Not all faults will light an indicator when they are **ACTIVE**.

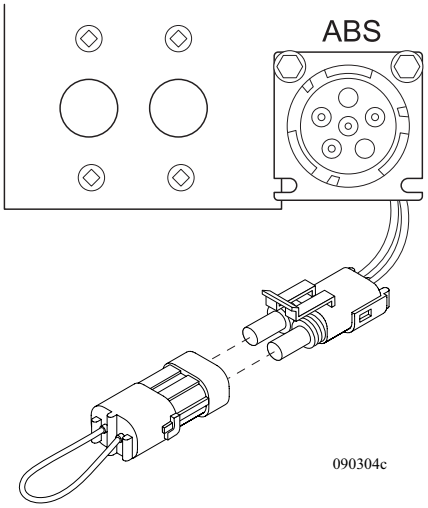


*Shorting Plug. Located behind the Diagnostic Plugs.*

**Motorhomes with the Cummins ISM engine uses three indicator lights:**

**WARNING**- indicates a need to repair a fault at the first opportunity.

**STOP**- indicates a need to shut down and remain shut down until fault is repaired.

**MAINT**- indicates a maintenance function needs to be performed.

**Engine Diagnostic: Cummins**

Uses the warning and stop dash indicator lights to emit engine diagnostic codes.

**NOTE: To retrieve engine diagnostic codes requires an Insight Diagnostic Display or a Shorting Plug hooked to the engine diagnostic harness.**

**Moterhomes with the Detroit Series 60 engine uses two indicator lights:**

**CHECK ENGINE**- indicates a maintenance function needs to be performed or a repair is needed at the first opportunity.

**STOP**- indicates a need to shut down and remain shut down until fault is repaired.

**Engine diagnostic:**

Uses check engine and stop dash indicator lights to emit engine diagnostic codes.

**NOTE: A list of diagnostic codes and how to retrieve them is included with the Detroit Diesel engine manual package. A Shorting Plug is used in lieu of the Diagnostic Request Switch.**

**To Retrieve Active Fault Codes: Cummins ISM**

1. Turn the ignition key **OFF**.
2. Hook up an Insight diagnostic display or Shorting Plug to the engine diagnostic harness.
3. Turn the ignition key **ON**; observe **Warning** and **Stop** lamps.
   - **a.** If no active codes are recorded, both lamps will remain illuminated.
   - **b.** If an active code is recorded, both the **Warning** and **Stop** dash warning lamps will illuminate briefly then go out followed by the **Warning** lamp illuminating briefly. This is an indication one or more fault codes will be displayed by the **Stop** lamp. A three-digit code group will display as a series of blinks-pause-blinks-pause-blinks-pause. Record the code(s) as a three-digit number. Codes are separated or ended by the **Warning** lamp flashing once.
   - **c.** The electronics will automatically scroll through all ACTIVE faults.
   - **d.** When codes are retrieved, turn **ignition** switch off.
   - **e.** Contact ***Cummins*** help line, **1-800-DIESELS**, or an authorized distributor.

**To Retrieve Active Fault Codes: Detroit Series 60**

1. Turn ignition key off.
2. Hook up a diagnostic data reader or Shorting Plug to the engine diagnostic harness.
3. Turn the ignition key ON, with the engine at idle or not running.
4. Active codes will be flashed on the STOP light, followed by inactive codes being flashed on the STOP light, followed by inactive codes being flashed on the CHECK ENGINE light. The cycle will repeat until the shorting plug is removed.
5. To contact ***Detroit Diesel*** customer service, **1-800-445-1980** 24 Hrs a day.



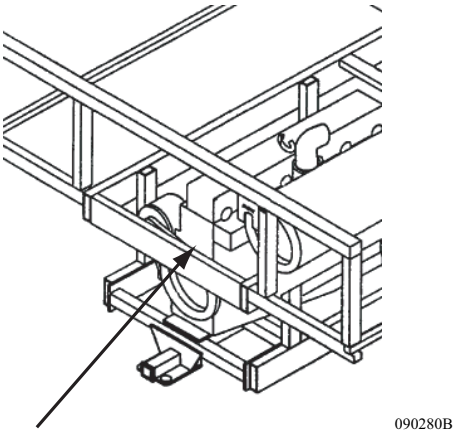


Engine Diagnostic Bracket
Located In This General Area

## ALADDIN™ ENGINE DISPLAY

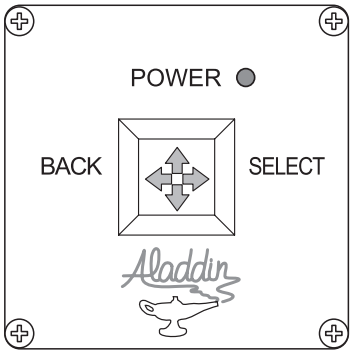


080377d

The Aladdin System will display engine and transmission statistics at a quick glance. Four additional engine and transmission screens can be accessed. These screens can be set to a rolling display or use the joystick to pick an individual screen.

**NOTE: The backup camera and engine/transmission screens cannot display simultaneously.**

**To Display Engine and Transmission Status:**

Use the joystick to enter the Engine/Trans Status screen from the Main menu. After entering the Engine/Trans Status screen, move the joystick right for a rolling display of the four sub-screens. Move the joystick up/down to select the desired sub-screen.

```
ENGINE/TRANS STATUS

ROAD SPEED              XX.X MPH
CRUISE INACTIVE         XX.X MPH

  ENGINE                TRANS
 XXXX  RPM              X  GEAR SEL
  XXX  F TEMP           XX  GEAR ATT
  XXX  PCT LOAD         XXX  F TEMP
   XX  PSI OIL
 XX.X  PSI BOOST        BATTERY
 XX.X  MPG              XX.X VDC
```

020196

```
ENGINE/TRANS STATUS

ROAD SPEED              XXXX MPH
CRUISE INACTIVE         XXXX MPH
TRANS GEAR SELECTED            X
TRANS GEAR ATTAINED           XX
```

020197

```
ENGINE/TRANS STATUS

ENGINE SPEED            XXXXRPM
PERCENT LOAD             XXXPCT
ENGINE OIL PRESS         XXXPSI
TURBO BOOST PRESS        XXXPSI
```

020197b

```
ENGINE/TRANS STATUS

ROAD SPEED               X.XMPH
ENGINE SPEED            XXXRPM
ENGINE COOLANT TEMP        XXXF
TRANS OIL TEMP             XXXF
```

020197e

```
ENGINE/TRANS STATUS

PERCENT LOAD             XXXPCT
INST FUEL MILEAGE       XXXMPG
FUEL RATE               XXXGPM
TURBO BOOST PRESS.      XXXXPSI
```

020197d

| EXTERIOR BULB CHART | |
|---|---|
| **LOCATION** | **BULB NUMBER** |
| HEADLIGHT - LOW BEAM | PHILLIPS 9006 |
| HEADLIGHT - HIGH BEAM | SYLVANIA 9005 |
| PARK TURN - FRONT | PHILLIPS T-3157 |
| FOG LIGHTS | HELLA COMET 550 |
| TAIL LIGHT | HELLA R5W or R10W |
| BRAKE LIGHT | HELLA P21W |
| THIRD BRAKE LIGHT | HELLA 524 |
| CLEARANCE LIGHTS | GE 194 |
| BACK-UP LIGHTS | Perlux by Grote 07803 MP # 4222W |
| LICENSE PLATE | GE 194 |
| DOCKING LIGHTS | Hella 893 12V 37.5W |
| TROUBLE LIGHT | R1910YF |
| TURN SIGNAL - MIRROR | GROTE 4641 AMBER |
| GRAB HANDLE - EXTERIOR | GE 194 |
| PORCH LIGHT | F8T5CW |
| COMPARMENT BAY LIGHTS | GE 1141 |

## ENGINE “NO START” - FLOW CHART

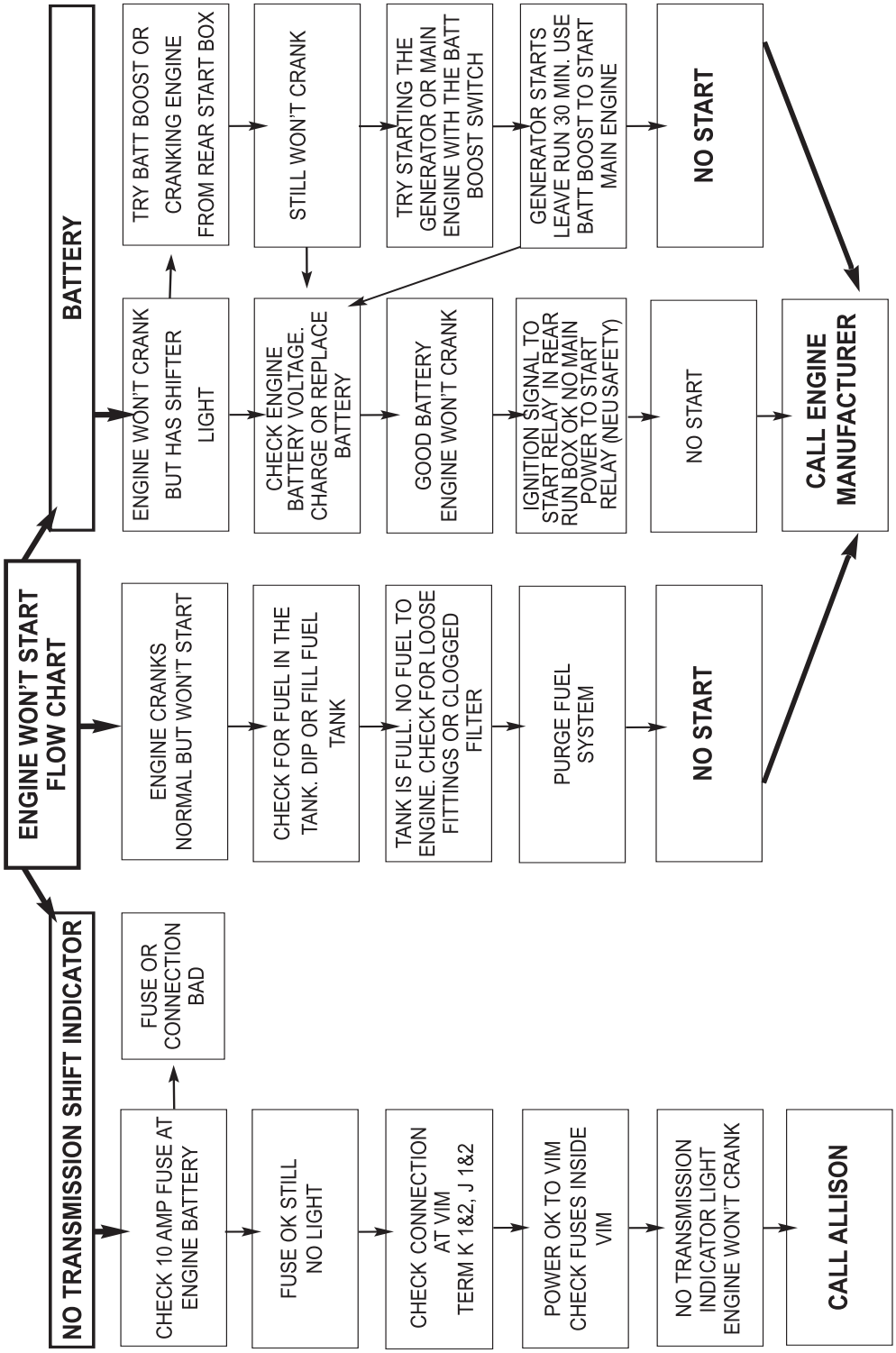


*VIM= Vehicle Interface Module.*

# ~ NOTES ~

9

# ~ NOTES ~

# Chassis Information
## Section 10


**CHASSIS - INTRODUCTION....469**
**AIR SUPPLY SYSTEM....471**
Air Governor....472
Air Storage Tanks....472
Air Coupler - Universal....472
Air System - Charging (External)....473
**AIR DRYER....474**
Desiccant Cartridge....475
Desiccant-Type Air Dryer....476
Air Dryer Cycle....476
**AIR SPRINGS....477**
Air Bag Inspections - Checklist....477
**RIDE HEIGHT VALVES....478**
Adjusting Ride Height....479
**BRAKE SYSTEMS....480**
Air Brakes....480
Park & Emergency Brake Systems....480
Brake Adjustment/Slack Adjuster....481
Brake Systems - Back-Up....482
**ABS/ATC SYSTEM (Anti-lock Brakes)....483**
**FRONT AXLE....487**
Alignment....488
Lubrication Maintenance Safety....491
Steering Components....491
Steering Column....492
Drag Link....493
Center Link....493
Steering Spindles....494
Control Arm Bushings....494
**STEERING GEAR....494**
**DRIVE AXLE & DRIVE SHAFT....496**
U-Joint Angles, Phasing & Driveline Balance....499
Lubrication Maintenance....499
**TAG AXLE....500**
Oil Lube Intervals....501
**SHOCK ABSORBER....502**
**LEVELING - HYDRAULIC (Opt.)....502**
Manual Leveling....506
Automatic Leveling....506
Retracting Leveling Jacks....507
Manual Retract Valves....508
Maintenance....509
**LEVELING - AIR....510**
**ENGINE - GENERAL INFORMATION....517**
**ENGINE DIAGRAM....518**
Detroit Diesel (Opt)....518
Cummins - I.S.M....520
**STARTING PROCEDURE....522**
Normal Starting....522
Cold Weather Starting....522
**ENGINE OIL....524**
Cummins Engine Requirements....524
Detroit Engine Requirements....525
Oil Maintenance....527
Cold Weather - Oil....528
Cold Weather Starting (Detroit)....529
**ENGINE SHUTDOWN....530**
Extended Engine Shutdown....530
**COOLANT....530**
Coolant Additives - SCA (Cummins)....533
Coolant Additives - SCA (DDC Series 60)....534
Maintenance Procedures....536
**CHARGE AIR COOLER....537**
**BRAKE - AUXILIARY....539**
**BRAKE - ENGINE....539**
**TRANSMISSION....540**
Shift Selector....540
Transmission Check Light....542
Periodic Inspections....543
**TRANSMISSION LUBRICATING FLUID....545**
Fluid Levels - Cold Check....545
Fluid Levels - Hot Checks....546
**FUEL SYSTEM....547**
Fuel Requirements....547
Fuel Tank....547
Fuel Sender....548
Fuel Lines & Hoses....549
Rear Start Switches....550
Fuel Filters....550
**HYDRAULIC SYSTEM....553**
Hydraulic Pump....554
Hydraulic Cooler....554
Hydraulic Fan System....555
Thermovalve....555
Switching Valve....556
Electric Override (ISM Only)....556
Fan Motor....556
Hydraulic Filter....557
Hydraulic Reservoir....558
**AIR FILTER....558**
Changing the Filter....558
Air Filter Minder....558
EGR Filter (Detroit Only)....559
**LUBRICATION CHART....560**
Cummins....560
Detroit Diesel Series 60....562
**PARTS - COMMON SOLENOIDS & SENDERS....564**
**SPECIFICATIONS - DIMENSIONS CHART....566**
**FILTER & BELTS CHART....567**
**METRIC/U.S. CONVERSION CHART....568**
**MAINTENANCE RECORDS....569**

## CHASSIS - INTRODUCTION

This section contains information and instruction regarding various components of the motorhome chassis. Following the guidelines and procedures will help you to understand and operate your motorhome. Complete instructions for engine and transmission are located in their respective operators manual included in the Owner's Information File box.

**WARNING: When frame or other welding is involved for motorhome repair or modification, only qualified, experienced technicians should weld on the chassis. Improper welding procedures and materials may weaken the assembly or result in damage that is not obvious and may not cause an immediate problem or failure. Unauthorized modifications or repairs to the chassis could result in a forfeiture of warranty coverage.**

**Due to the sensitive nature of the electronics on the chassis, the following precautions are required to protect electrical components in the motorhome chassis.**

1. **Disconnect the (+) positive and (-) negative battery connection, and any electronic control ground wires connected to the frame or chassis.**
2. **Cover electronic control components and wiring to protect from hot sparks.**
3. **Disconnect the terminal plugs from the engine Electronic Control Unit located on the passenger side of the engine block.**
4. **ECV in Bay under middle. Disconnect all the plugs from the Allison Electronic Control Module located in the storage Bay between the frame rails on curbside.**
5. **Disconnect the wiring from the alternator.**
6. **Do not connect welding cables to electronic control components.**
7. **Attach the welding ground cable no more than 2 feet from the part to be welded.**

The Roadmaster chassis design provides exceptional balance, handling and braking characteristics. The Roadmaster chassis is an engine and frame unit featuring a semi-monocoque tubular all steel frame design, providing greater structural integrity and uniform stress distribution. Incorporated in the Roadmaster chassis is the exclusive air glide suspension system using eight outboard mounted air bags and shock absorbers. The tag axle uses two inboard mounted air bags and shock absorbers. The design and set up is intended to provide the smoothest ride, best handling and trouble free service while delivering top notch drivability. The chassis has either a three-point hydraulic leveling system or air leveling system, or both. The Roadmaster chassis design offers unsurpassed ease of maintenance and service.

The towing system rating incorporated in the construction of the frame is 10,000 lbs. towing and 1,000 lbs. tongue weight.

100168b

*Tag located on the curbside, from behind front wheel, and in generator compartment.*

The Roadmaster's exclusive cushion air glide suspension consists of front and rear axles, with leading and trailing arms in a parallel four link arrangement. A panhard bar on each axle controls side motion. Each axle mounts to a wide platform H-frame that carries the coach body on eight outboard mounted air bags (4 front and 4 rear). The tag axle uses two in-board mounted air bags. Each air bag couples with a Bilstein gas shock absorber. The suspension control arms attach to the frame through bushings, which require no lubrication. The preset suspension ride height automatically maintains the proper suspension height throughout the load range.

## AIR SUPPLY SYSTEM

The air compressing system on the motorhome is comprised of several items: air compressor, air governor, air dryer, front air tank and a rear air tank. The compressed air system operates several items, some of which include brakes, suspension, air horns, air gauge and stepwell cover. The air system is charged by a gear driven air compressor mounted on the engine. As engine speed increases, compressed air output increases. When the air is compressed, heat is generated. Heat dissipates as the air is discharged from the compressor. Moisture condenses in the compressed air as it cools. The moisture laden air then enters an air dryer where the air is filtered. The filtered air charges the front air tank. The front air tank is divided in two halves: a wet side and a dry side. The compressed air enters the wet side before entering the dry side. A discharge line from the dry side of the front air tank charges the rear air tank. Discharge lines use inline check valves to prevent back flow of compressed air.

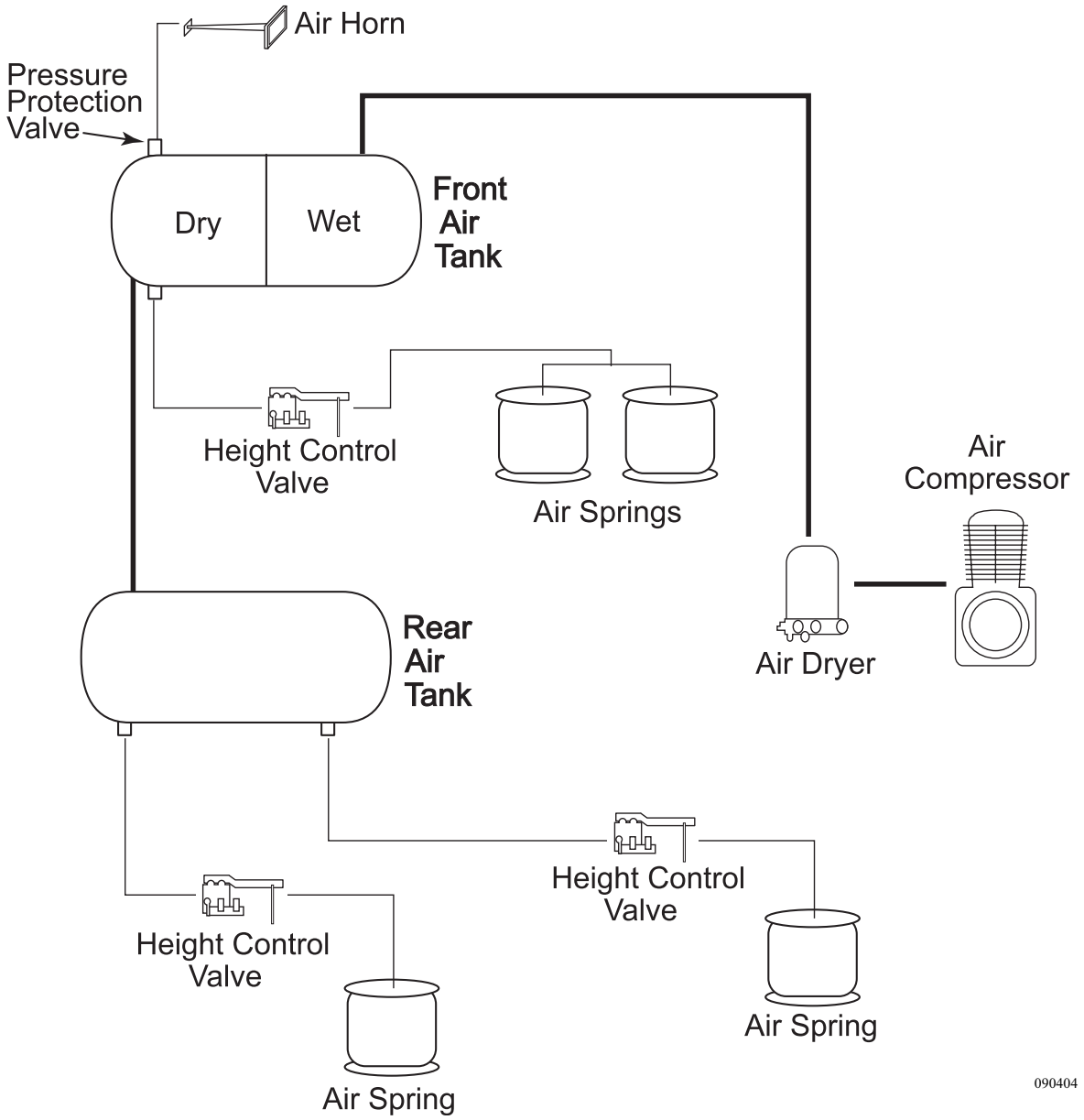

The pneumatically operated items are divided into two categories: brakes and accessory air. Brakes have full use of supplied air pressure. Accessory air items, such as air horns or stepwell covers, receive air through pressure protection valves (PPV). The PPV will not allow compressed air flow until approximately 60 psi. In the event of an air system problem, the pressure protection valve will leave a reserve air charge for braking. Pressure protection valves are installed for safety.

## Air Governor

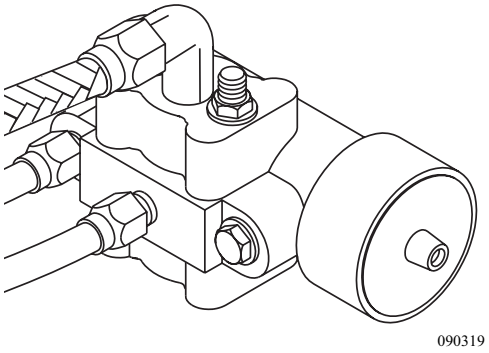


The air governor, located in the engine compartment, regulates the air compressor to cut-in and cut-out, keeping the air system in the specified operating range of 105 to 120 psi, then sends an air "purge" signal to the Air Dryer.

Cut-in pressure of approximately 105 psi is factory preset from the governor manufacturer and is not adjustable. Cut-out pressure is calibrated to 120 psi. When cut-out pressure is reached, the governor will send an air purge signal to the Air Dryer. This opens the purge port of the Air Dryer, expelling moisture. The purge action of the Air Dryer is identified by the short release of air at the rear of the motorhome.

## Air Storage Tanks

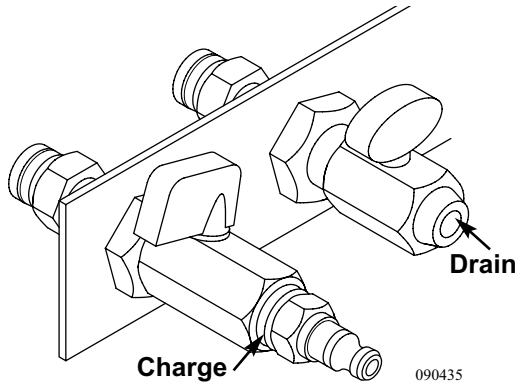


*Located Generator Compartment.*

The front and rear air tanks should be manually drained once a month, or more, depending on operating conditions where humidity is high. The front air tank has a drain valve for both the wet and dry side. The rear air tank only has one drain valve. Open the drain valves until all air is purged from the tanks, allowing five extra minutes for moisture to be expelled. Remember to close the tank drain valves. Both air tanks have a pressure relief valve which are set to release at approximately 130 psi.

## Air Coupler - Universal

A remote air supply coupler is provided for convenience. It is located in the roadside LP Tank compartment. The universal female fitting will accept several types of ¼" ID male air fittings, including type C automotive. The auxiliary air fitting may be used to inflate tires, air mattresses or other pneumatic items. This fitting is not designed to charge the air system on the motorhome. The air supply for the auxiliary air fitting is charged from the front air tank through a pressure protection valve.

**To Use the Universal Air Coupler:**

- Remove the plastic protective dust cap.
- Using a firm grip, insert the air fitting into auxiliary air supply. The locking collar is spring loaded and will lock automatically when the fitting is properly inserted.

**To remove fitting:**

- Firmly grip the air hose near the fitting to prevent recoil.
- Slide the locking collar back to release fitting. The collar will lock into the open position when fully retracted.
- Replace the protective dust cap when finished.

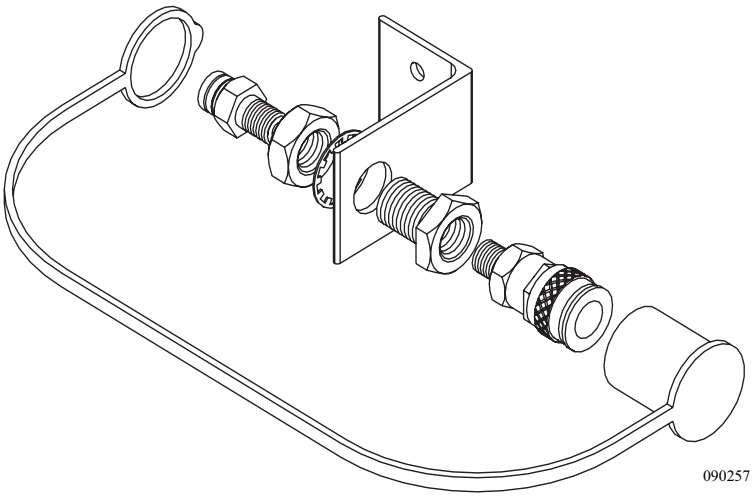


**NOTE: There are small air pressure restrictions in the pressure protection valve and tire stem valve. Due to this restriction, the maximum amount of tire pressure achieved when the system is used to fill a tire is approximately 95-105 psi with air system on the motorhome charged to 120 psi. Maximum outlet air pressure is achieved when the air system completes the fill cycle indicated by the purge cycle of the air dryer.**

## *Air System - Charging (External)*

The air system on the motorhome can be charged from an external air supply source. Located in the generator compartment is a type C automotive male fitting. Caution should be used when charging the air system from this fitting. The air supplied from an external source may contain moisture. Compressed air introduced into the air system on the motorhome from this fitting is not filtered by the air dryer. The auxiliary air charge fitting will charge the front and rear air tanks. A shut-off valve is installed to prevent air from escaping.

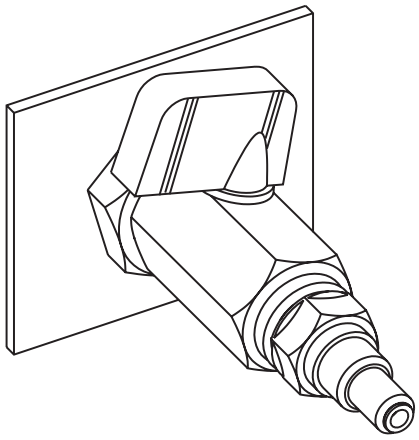


**CAUTION: The external air supply source should be regulated to charge the air system on the motorhome no higher than 120 psi. Damage to the air system or pneumatically operated items may occur**

## AIR DRYER

The air dryer is located underneath the motorhome next to the transmission. The air dryer removes moisture from the compressed air system. This is important because if air contains moisture it can freeze and prevent operation of brakes or other pneumatic operated items.

The air dryer has three functions: cooling, filtering and drying the air going through the motorhome's air system. If an excessive amount of water is present when performing the monthly air tank drain service, it may be an indication that the filter for the air dryer needs to be changed.

**Operation:**

During system pressure build-up, compressed air passes into the air dryer where the filter system removes contaminants and passes the air into the drying stage. When the compressor unloads, the water is expelled and the dry air flows back through the dryer, drying the desiccant for the next cycle. Initially, moisture condenses in the base of the dryer. Moisture-laden air passes through the desiccant bed in the air dryer cartridge and is dried.

- The compressor intakes water vapor with the air. The water vapor condenses as it cools.
- The air dryer prevents water accumulation in air lines that could damage seals and valves and wash away lubricants.
- The air dryer also prevents water in the air lines that can freeze and damage air system components.

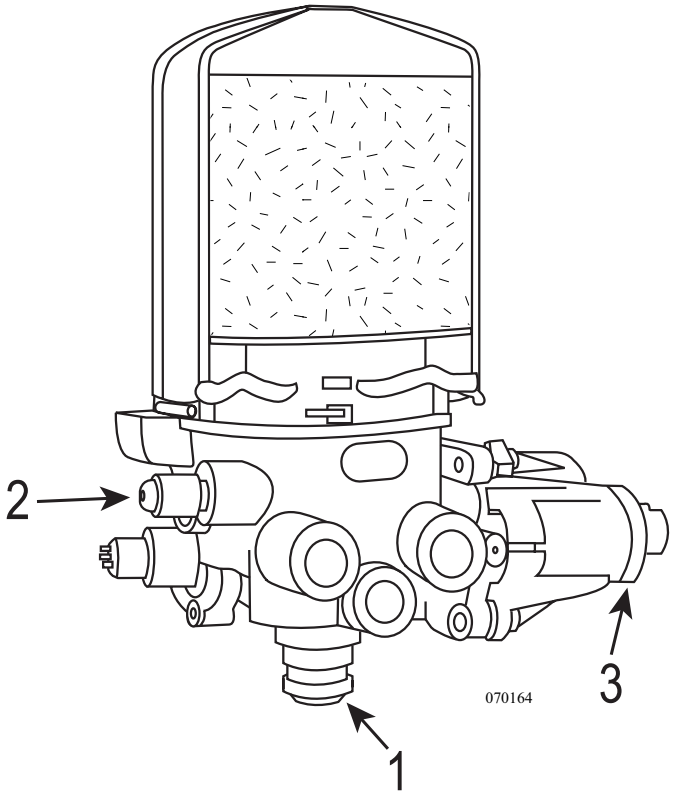


**Air Dryer Components**:

1. **Purge Valve:** A valve located on the bottom of the air dryer base that remains open during a compressor unload cycle. The purge valve allows collected moisture, condensation and contamination to be expelled from the air dryer during the purge cycle.

2. **Pressure Relief Valve:** Protects the air dryer from over-pressurization.

3. **Regeneration Valve:** Controls regeneration of the desiccant. The regeneration valve allows air from the supply and secondary tanks to bypass the outlet check valve. The air expands and back flushes moisture off the desiccant through the dryer's purge valve.

## Desiccant Cartridge

In extreme cold, verify that the air dryer heater is in good working order. The heater in the air dryer is a 100 watt heater controlled by ignition power and turned off when the ignition is switched off. The heater turns on below 45° F and off when the air dryer temperature is above 86° F. The fuse is located in the front electric bay, roadside.

**WARNING: Remove all pressure from the air system before disconnecting any component, including the desiccant cartridge. Pressurized air can cause serious personal injury.**

070165

1. The replacement kit contains one cartridge and one O-ring.
2. Loosen and remove the old cartridge. Use a strap wrench, if necessary.
3. Remove and discard the O-ring from the dryer base.
4. Inspect and clean the seal seat. Repair any minor damage.

**NOTE: If the seats are damaged so badly that a tight seal cannot be maintained, replace the air dryer.**

5. Lubricate the O-Ring on the stem with a thin layer of grease.
6. Lubricate the cartridge seal with a thin layer of grease.
7. Thread the replacement cartridge onto the base until the seal touches the base. Tighten the cartridge ONE additional turn. **DO NOT OVERTIGHTEN.**

1. O-Ring
2. Seal Seat
3. Seal

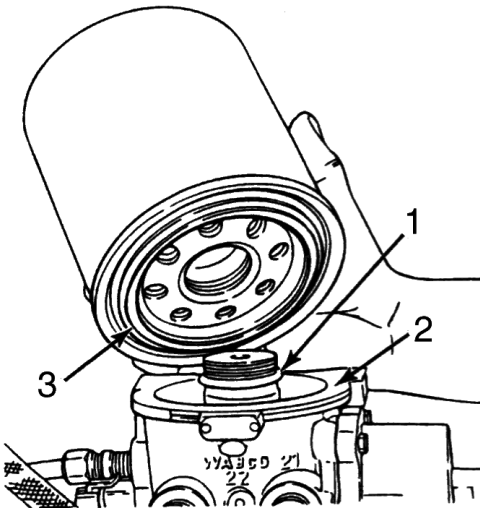

080223

| REPLACEMENT REQUIREMENTS | | |
|---|---|---|
| **Components** | **When to replace** | **Why** |
| Desiccant Cartridge | Every two to three years. When compressor is replaced. Water in supply tank. | Preventive maintenance. Contaminated cartridge. Saturated or contaminated cartridge, high duty cycle (wrong application of air dryer). |

10

### Desiccant-Type Air Dryer

1. Warm, humid air from the compressor condenses into either water or water vapor before entering the air dryer.
2. A desiccant-type air dryer protects the motorhome air brake system by drying moisture-laden air before it passes through the air reservoirs and into the brake system.
3. Water collects in the base of the dryer when warm air condenses the water before it enters the dryer, or inside of the dryer before the water reaches the desiccant.
4. The desiccant material then removes additional water vapor, further drying the air.
5. During regeneration phase, the regeneration valve and pressure-controlled check valve remove water from the desiccant bed with a backflow of dried, expanded system air.

### Air Dryer Cycle

The governor turns the compressor on when the supply tank pressure drops below cut-in pressure. Compressed air passes into the air dryer at the inlet port:

1. Moisture-laden air and contaminants pass through the desiccant.
2. Moisture is retained by the desiccant. Moisture also collects in the base of the dryer.
3. When the compressor unloads the purge valve opens. The governor turns the compressor off when the system reaches cutout pressure (approximately 120 psi).
4. The dryer purges and expels water collected in the dryer base.
5. When the regeneration valve opens, the dry system air flows back through the dryer. A small charge of air from the front air tank backflows through the filter. The backflow dries the desiccant, preparing it for the next cycle.

## AIR SPRINGS

Air ride springs are available in single, double and triple convolution types plus reversible sleeve models for virtually every conceivable heavy-duty vehicle suspension application.

1. **STUD:** Manufactured as a permanent part of bead plate assembly for maximum strength and durability. Used to attach spring to the vehicle's suspension.
2. **BEAD PLATE:** Crimped onto bellows at the factory for a durable design and maximum quality control. Allows 100% leak proof testing prior to shipment.
3. **BELLOWS:** "Air bag" includes four plies of material: an inner layer, two plies of cord-reinforced fabric and an outer cover. Natural rubber construction provides functional properties up to - 65º F.
4. **BUMPERS:** A solid rubber or engineered plastic device designed to prevent significant damage to the vehicle or its suspension in event of a sudden loss of air pressure in spring.
5. **PISTON:** Provides a lower mounting arrangement for air spring. Controls characteristics of spring under changing pressure loads.
6. **PISTON BOLT:** Attaches piston to bellows. Sometimes extended as a means of attaching spring to vehicle suspension.

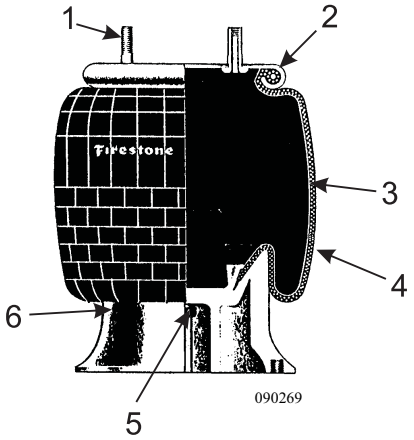


### *Air Bag Inspections - Checklist*

Listed below are items that can be checked when the motorhome is in for periodic maintenance.

**NOTE: Never attempt to service the air suspension on a motorhome with the air bags inflated.**

- **Inspect** the Outer Diameter (O.D.) of the air springs. Check for irregular wear or heat cracking.
- **Inspect** the air lines to make sure contact does not exist between the air line and the Outer Diamter (O.D.) of the air springs. Air lines can rub a hole in an air spring very quickly.
- Check to see that there is sufficient clearance around the complete circumference of the air spring while at its maximum diameter.
- **Inspect** the O.D. of piston for buildup of foreign materials. (On a reversible sleeve style air spring, the piston is the bottom component of the air spring.)
- The correct ride height should be maintained. All motorhomes with air springs have a specified ride height established by the manufacturer. This height should be maintained within ¼ in. This dimension can be checked with the vehicle loaded or empty.

- The leveling valves (or height control valves) assist in ensuring the total air spring system works as required. Clean, **inspect** and replace if necessary.
- Make sure to check shock absorbers for leaking hydraulic oil and worn or broken end connectors. If a broken shock is found, replace it immediately. The shock absorber will normally limit the rebound of an air spring and keep it from over extending.
- Check the tightness of all mounting hardware (nuts and bolts). If loose, tighten. Do not over-tighten.

**Cleaning:**

The approved cleaning method is to use soap and water, methyl alcohol, ethyl alcohol and isopropyl alcohol. Unapproved cleaning methods include all organic solvents, open flames, abrasives and direct pressurized steam cleaning.

## RIDE HEIGHT VALVES

Three height control valves (HCV) inflate or deflate the air springs maintaining the proper suspension height throughout the load range. Two valves are used at the rear drive axle. These valves control rear suspension height and left or right tilt of the motorhome. Only one valve controls front suspension height. The height control valves mount to the main frame of the motorhome above the axles with a linkage rod connecting the valve to the axle.

The actuating components inside the valves are oil dampened to reduce valve reaction to momentary suspension bounce and rebound. When a constant suspension change occurs, such as a load change or weight transfer through a sustained corner, the valve reacts adding or purging air from the air springs as needed.

The air springs mount between the axles' H-frame assembly and the two main frame rails. Air spring support plates mount to the main frame and the H-frame. There is a specified distance the air spring must maintain between the mounting plates. Other than specified distance between the plates not only compromises ride quality and handling, it adversely affects shock absorber travel, drive shaft angle and various other running gear components.

Should it become necessary to check the suspension ride height, start with the motorhome on a flat level surface. The air system must be fully charged with the suspension normalized at ride height. Specified distances may vary plus or minus ¼". Small offset adjustments to the rear valves may be necessary to compensate for slight tilt. Example: Adjusting the curbside rear height control valve up will pivot the roadside front corner down.

**NOTE: Drive shaft angle is affected by the suspension ride height. Improper drive shaft angle can damage suspension or shorten the life of universal joints. Shock absorbers and air springs are in travel centers at proper ride height. The key must be on for the suspension to operate when equipped with HWH air leveling.**

## *Adjusting Ride Height*

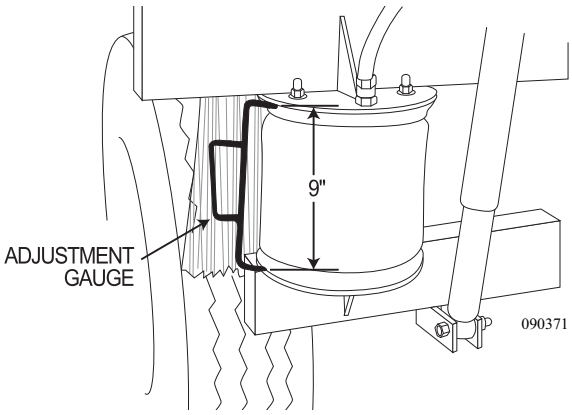


**Measurement is: Front = 9 in., Rear = 9 in.**

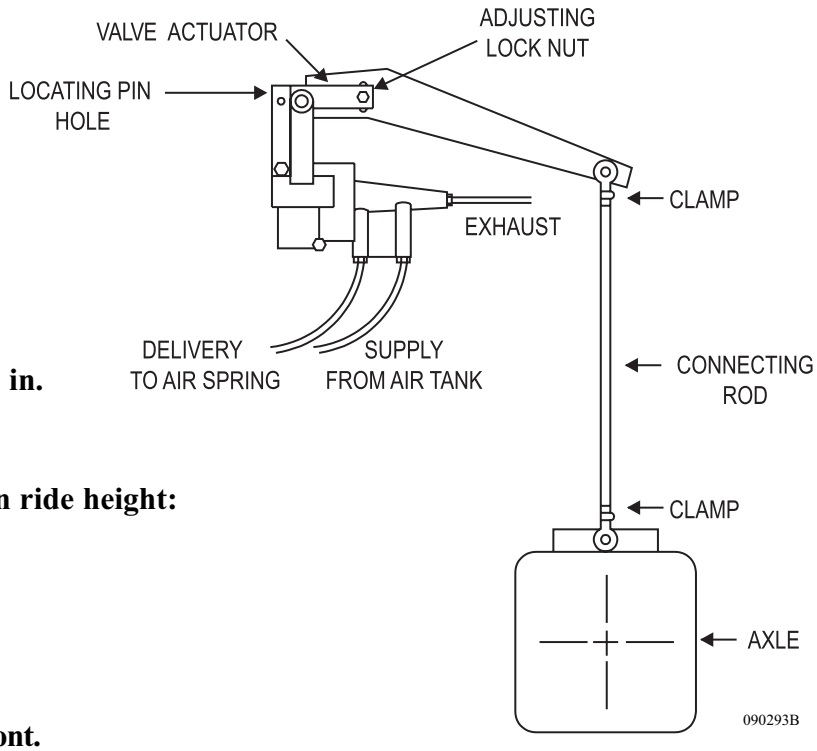


**Preparations to adjust the suspension ride height:**

- The motorhome on flat level surface.
- Air system fully charged.
- Ignition key on.
- Suspension at normal ride height.

**Start by checking the distance in the front.**

1. Measure the distance between the mounting plates of the air springs.
2. If the measurement is off, loosen the adjusting lock nut at the eccentric slot on the valve.
3. Move the plastic arm up to raise suspension height, this will inflate all the front air springs. Move the plastic arm down to lower suspension height, this will deflate the air springs. Make adjustments in small increments.
4. After obtaining the specified distance, insert a 1/8" or 7/64" inch twist drill bit into the plastic arm and valve body. This will center the travel of internal piston. Tighten adjusting lock nut between 60-80 in/lbs.
5. Check adjustments made by using the Air Dump switch to deflate air springs. Start the engine and allow the air system to become fully charged. Allow the suspension to adjust and come to a neutral setting.
6. Re-check the suspension height measurement. Follow the same procedure for each rear control valve.
7. Re-check the front suspension height after adjusting the rear height control valves.

**NOTE: Do not modify length of the linkage rods. Make any necessary adjustments using eccentric slot on the ride height control valve.**

10

## BRAKE SYSTEMS - *Air Brakes*

The motorhome is equipped with air brakes using the same efficient system as over the road trucks. Proper maintenance and lubrication is the key to keeping the brake system in proper working order. The brake system on the motorhome is designed to accommodate the weight of the vehicle and towing loads. This system differs from a conventional automotive hydraulic braking system and should be treated differently.

When operating a vehicle equipped with air brakes consideration needs to be given to stopping distances and air system pressures. The heavier the vehicle, the greater the kinetic energy. The motorhome requires longer stopping distances. Each brake application uses air from the air system. Give attention to the air gauge as well as the surroundings. Engine speed is directly proportional to how fast the air system is replenished. Prepare for downhill grades. Grades are generally posted in percentages. It may be necessary to select a lower gear. Make use of the engine Jake brake. When making brake applications use individual short applications down long hills rather than "riding" the brakes. This will extend the life of the brake lining. Avoid overheating the brakes. Hot brakes have less stopping power. When maneuvering the motorhome around in small areas, or backing into spaces, several individual brake applications might be made. Watch the air gauge. Plan ahead when parking to make it easier on yourself. When preparing to back into a space swing the motorhome so it is aligned with the parking slot before backing up.

The air braking system on the motorhome is equipped with several safety features unlike that of automotive hydraulic braking systems. One safety feature is a low air pressure warning system. Should a low air condition arise while the vehicle is under operation a warning buzzer will sound and a dash warning light will illuminate alerting the operator of the situation. This warning occurs at approximately 60 to 65 psi (pounds per square inch).

A simple mechanical explanation of what occurs when a brake application is made is as follows: The air system supplies air to the foot brake, this is called a treadle valve. Pushing down on the treadle valve supplies an air charge signal to a brake chamber. This sealed chamber consists of a spring and air bladder. The air charge signal pushes on the bladder which extends a threaded rod connected to the automatic slack adjuster. The slack adjuster rotates the S-cam expanding the shoes against the drum. Air disc brakes follow much the same principal, with the exception of the S-cams.

### *Park & Emergency Brake Systems*

The park and emergency brake systems are combined and apply to the rear drive axle only. These are called spring brakes. When the park brake is applied, air is released from the rear brake chambers, allowing the large spring in each rear brake chamber to manually push the brake shoes against the drum. The air system must be charged above 35 psi so the park brake will remain released. Pushing down on the park brake handle charges the rear brake chambers with air pressure, overriding the emergency brake springs and releasing the brakes. In the event of air loss, while the vehicle is under operation, the park brake will automatically apply (this occurs at approximately 30 psi) acting as an automatic emergency brake system.

When preparing to depart, allow the air system to achieve full air pressure. This is indicated by the air gauge needles. Listen for the air dryer to purge, indicating full air pressure has been obtained and the air dryer is functioning. Look and listen for abnormalities. Abnormal air pressure readings by either needle of the air gauge should alert the operator. Have the air system checked to avoid an untimely failure.

Should a failure occur in the air system, preventing the air pressure from building, it may become necessary to "cage" the spring brakes. This is an emergency procedure only. Caging the rear air brake chambers manually overrides the spring brakes and allows the vehicle to move. This procedure does not affect normal service braking.

**NOTE: When the park brake is released, the Park illumination lamp will remain lit until air system pressure is above 65 psi.**

**WARNING: When parked, if the air tank is not depleted, there is the possibility of an accidental release of the parking brake. Traveling with small children and/or pets may require a small block to be fabricated to prevent accidental release. The block should be placed under the knob on the dash panel. A wooden clothes pin, clasped at the base of the shaft, will work.**

## *Brake Adjustment /Slack Adjuster*

The motorhome is equipped with automatic slack adjusters. As brake lining wears, the slack adjusters will automatically ratchet on the return stroke as needed. This ratchet action will keep the brake lining at proper adjustment. Brake adjustment should not be necessary. Indications of a vehicle needing possible brake adjustment may be noticed by the park brake not holding on a hill, or gradual loss of braking power. Automatic slack adjusters and the connecting S-cam shaft require periodic lubrication.

**NOTE: Replacement parts should be of the same original equipment size and type. Mixing brake components may result in unequal braking action. Brake adjustments are part of normal maintenance of the motorhome. Brake adjustments are not covered by the manufacturer.**

**WARNING: Brake lining may contain asbestos material and should only be serviced by qualified service technicians who are trained in the appropriate precautionary procedures. If any loss of braking effectiveness or abnormal braking indications are noticed, the brakes and slack adjusters should be inspected by a qualified brake technician.**

## Brake Systems - Back-Up

The motorhome air braking system is equipped with several back-up safety systems and warning alarms in case of an air system failure. Refinements to air braking systems have been instituted with safety as top priority. For example: should the air compressor fail to charge the air system and the low air gauge readings go undetected, a low air pressure warning buzzer will sound and a low air pressure dash warning indicator lamp will illuminate. These warning indicators occur at approximately 65 psi. This will alert the operator of an impending situation. If the motorhome is allowed continued operation, the pneumatic emergency spring brake relay valve installed in the air system senses the low air pressure condition. The emergency spring brake relay valve will release the air charge from the spring brake air chambers on the rear drive axle. In this case, the park brakes will automatically apply at approximately 30 psi. This safety back-up system acts as an automatic emergency brake system.

Another back up safety is the air system separation of the front and rear brakes, implemented by using two air tanks. One tank is located in the front and the other is located in the rear. This separation allows the front air tank to operate the front brakes; the rear tank operates the rear drive axle brakes and tag axle brakes. This tank division gives reassurance in case one tank experiences a failure of an accessory air item allowing the compressed air to escape.

Accessory air items are other pneumatically operated items such as the air horn, step well cover, vacuum generator, etc. The accessory air items operate only when air tank pressures exceed 65 psi. This is done with pressure protection valves. Should an accessory air item fail the pressure protection valve (PPV) reserves the remaining air pressure of 65 psi for braking. This will leave the motorhome with one air tank fully charged for safety back up.

In another situation, whereby all compressed air has escaped from the rear air tank, a pneumatic back-up safety valve is installed. This is the safety inversion valve. The inversion valve senses the absence of rear air tank pressure. In this case the inversion valve will allow the operator to make a modulated spring brake application, made in conjunction with the emergency spring brake relay valve. The inversion valve allows the front air tank pressure to recharge the rear brake chambers after the modulated spring brake application has been made. This back-up system implements use of all the brakes, allowing the operator to bring the vehicle to a safe stop. In case of all compressed air charge escaping from the front air tank, the operator will still have full use of the rear brakes.

## ABS/ATC SYSTEM (Anti-lock Brakes)

The motorhome is equipped with an anti-lock braking system (ABS) and automatic traction control system (ATC). The ABS system monitors wheel rotation speeds by using a 100-tooth magnetic tone ring mounted to the hub. Revolving with the wheel, the magnetic tone ring is polarized giving positive and negative pulsations. A stationary sensor is mounted adjacent to the tone ring monitoring the magnetic pulses. The pulses are monitored by the ABS electronic control unit (ECU).

The ECU monitors all available wheel sensors at the rate of 100 times per second. The ECU controls Pressure Modulator Valves. Pressure Modulator Valves have two electric over air solenoids, a hold solenoid and a release solenoid. The modulator valves are open under normal braking, allowing a straight through air signal from the treadle valve to the brake chamber. Should a wheel lose traction under a braking application, the ECU will energize the hold solenoid of the Pressure Modulator Valve to interrupt the air signal from the treadle valve to the brake chamber. The release solenoid vents the existing air signal, at the brake chamber to the atmosphere, allowing the skidding tire to regain traction. Skidding tires have less tractive efficiency. It is possible, under certain conditions, to have the wheel(s) skid with a normal functioning ABS system.

The ABS itself does not apply additional braking power. The purpose of the ABS is limiting brake torque to prevent wheel locking that results in the loss of lateral stability, and increased stopping distances. Cautious driving practices and maintaining adequate safe distances when following vehicles is the key to safe vehicle operation.

**WARNING: The ABS/ATC system is designed to increase tire to road surface traction. The system cannot overcome naturally occurring laws of physics. The ABS/ATC system combined with safe driving practices will reduce the possibility of wheel skid and loss of lateral stability.**

**ABS Component Function:**

- Speed sensors and tone rings on each wheel monitor wheel rotation.
- Each speed sensor communicates wheel rotation pulses to the Electronic Control Unit.
- ECU receives the speed sensor inputs, interprets the signal pulses, calculates speed and acceleration rates of each wheel.
- Based on the speed sensor input, the ECU detects impending wheel lock and operates the ABS Modulator Valves required for proper control. The Modulator Valves can be operated in the air, release or hold modes to regulate air pressure to the brake chambers.
- The braking force is applied at a level which minimizes the stopping distances while maintaining as much lateral stability as possible.

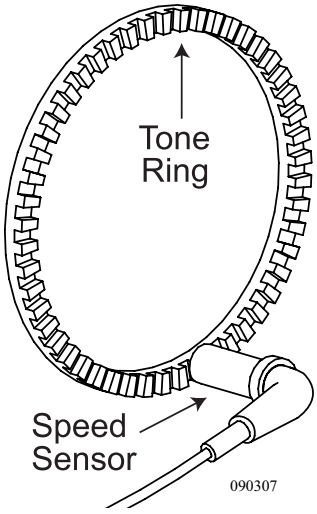


10

**ABS Warning Lights:**

The ABS will perform a dash indicator lamp check and self-diagnostic test each time the ignition is switched to the on position.

- When the ignition is turned on, the ABS TAG indicator illuminates momentarily (2.2 seconds) verifying the self-diagnostic test. If the ABS TAG indicator light remains on, or illuminates while the motorhome is being operated, there is a fault in the anti-lock brake system on the tag axle only. This fault will not affect normal service braking. The motorhome will need to go to a service center to repair the problem.
- When the ignition is turned on, the ABS indicator illuminates momentarily (2.2 seconds), verifying the self-diagnostic test. If the ABS light illuminates while the motorhome is being operated, there is a fault in the anti-lock brake system on the drive axle or steer axle. This fault will not affect normal service braking. The motorhome will need to go to a service center to repair the problem.

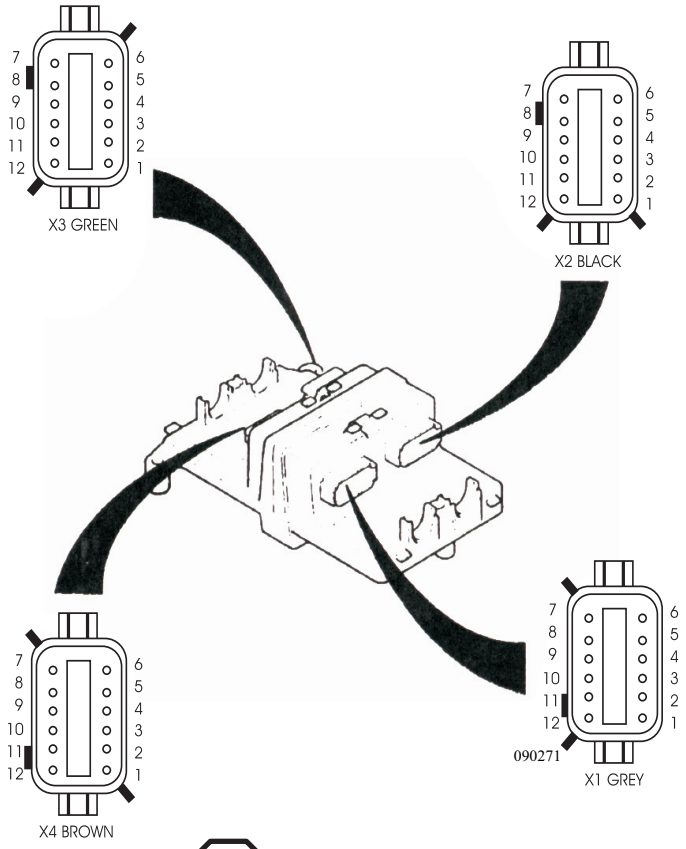


**ABS Diagnostic Button:**

By properly actuating the ABS diagnostic button, system configuration codes and fault codes can be retrieved as blinked sequences on the ABS warning light. System configuration codes are sequences of four blinked digits while fault codes are sequences of two blinked digits. Refer to an authorized Eaton/Roadranger for a list of blink code sequences. If the Diagnostic button is not pressed correctly for a specific readout, stop and start over at the beginning of the procedure. All blink codes are displayed by the ABS warning light only. The ATC light does not display blink codes.

**NOTE: All blink codes are displayed by the ABS warning light only. The ATC light does not display blink codes.**

**INFORMATION: Contact a certified Eaton service repair center at (800-826-4357) for more information.**

1. Write down system configuration codes and fault codes.
2. If the system configuration is correct, clear the fault codes. The process for clearing the fault codes and reconfiguring the ECU is the same when using the diagnostic button.
3. After clearing fault codes, retrieve the fault codes once again to make sure inactive fault codes were cleared. Only active codes will now be displayed.

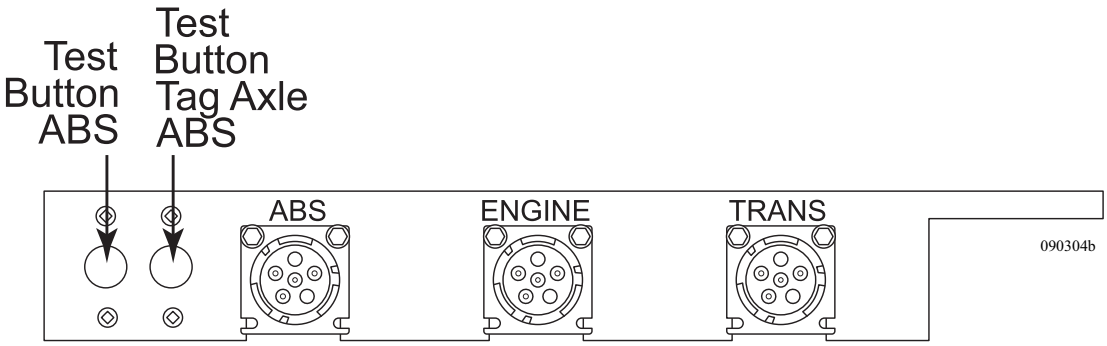


**Reading Configuration Codes:**
1. Turn the ignition key to ON.
2. Apply and release brakes once before proceeding.
3. Press and hold the diagnostic button for two seconds and release, immediately press the diagnostic button a 2nd time for two seconds and release.
4. The four-digit configuration code is retrieved and displayed. It should read 1-2 pause 4-5.

**Retrieving Fault Codes:**
1. Turn the ignition key to ON.
2. Apply and release brakes once before proceeding.
3. Press and hold the diagnostic button for two seconds and release.
4. Two-number blink codes are retrieved and displayed. A two-digit display of 1-1 indicates no faults; The ABS system is functioning properly.

**Clearing Fault Codes and/or System Configuration:**
1. With the ignition OFF, press and hold the diagnostic button.
2. Turn the ignition key to ON while pressing the diagnostic button.
3. Wait two seconds and release the diagnostic button.
4. Press and release the brake pedal.
5. The ECU is reconfigured to match connected components and fault codes are cleared.
6. Repeat the "Retrieving Fault Codes" procedure to verify that fault codes are cleared.

**Disabling ATC for Dynomometer Testing:**

1. Turn the ignition key to **ON**.
2. Press and hold the diagnostic button for at least 3 seconds and release.
3. The ATC light turns **ON** and the **ABS** light blinks **17-8**, indicating the ATC system is disabled. All subsequent flashes are active ABS fault codes.
4. The ATC system will be enabled when the ignition is switched off then back to on.

**ATC System:**

The ATC system improves traction on slippery or unstable road surfaces by limiting excessive drive wheel slip. This is accomplished two ways, limiting engine torque to the drive wheel or engaging a brake to the spinning drive wheel. During normal operation engine torque is not affected. The ATC system works in conjunction with the ABS Electronic Control Unit. The ECU monitors tone ring speed of the drive wheel in relation to the other wheels. If a speed differential occurs in the drive wheel, the ECU enters Automatic Traction Control mode.

During an ATC event, the ECU will automatically react to optimize traction and safety if the motorhome encounters a slippery road surface. Engine torque is normally reduced to limit drive wheel slip.

**NOTE: The ATC system is always active.**

**ATC reacts to drive wheel slip by:**

- Reducing engine torque to the drive wheel if road speed is above 25 mph.
- Reducing engine torque and activating drive axle brake controls if road speed is below 25 mph. If the brake control activates, it remains active regardless of road speed.

How Automatic Traction Control (ATC) Works

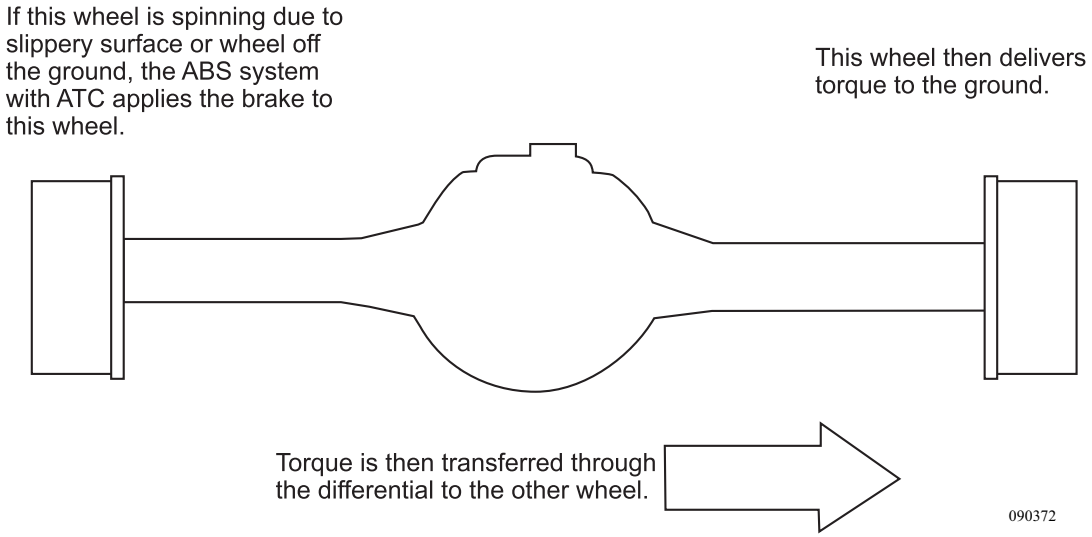

**ATC Switch:**

Activating the ATC switch reduces ECU control over engine torque. Momentarily pressing the ATC switch allows the ECU to increase the amount of engine torque applied to the drive wheel in an ATC event. The amount of engine torque applied to the drive wheel will vary with the amount of drive wheel slip versus road speed. In an ATC event, the ECU remains active regardless of road speed or switch position. The indicator light flashes slowly when the ATC switch is activated.

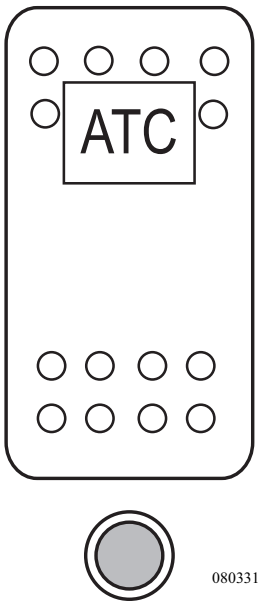


**ATC Indicator Light:**

During normal operation, the ATC indicator light will illuminate steady when the ignition key is turned ON. The light remains illuminated until the first brake application. If an ATC event occurs, the indicator light will flash quickly. The indicator light will flash slowly if the ATC switch is activated.

**CAUTION: Normally the switch should remain inactive. During an ATC event (drive wheel slip) the ECU will automatically optimize drive wheel traction in most situations. Activating the switch during periods of wheel slip can increase torque to the spinning drive wheel. Drive train damage can occur if the spinning drive wheel should suddenly regain traction. If the motorhome is stuck it is advised to call a professional towing company to limit the possibility of body and drive train damage.**

## FRONT AXLE

While driving the motorhome, be aware of any changes in the feel of steering and have the system checked if there are any apparent differences. It is normal to hear some hydraulic noise from the steering, especially when the steering is at maximum or while turning the wheel when the motorhome isn't moving. Investigate any unusual or loud noises that occur. Begin by checking the level of the hydraulic fluid. Traveling at slow speeds over rough surfaces may cause a "clunking" noise to emanate from the steering column, but if noise is heard on smooth surfaces while turning back and forth sharply, the noise should be inspected and repaired as necessary.

Shimmy and looseness should be checked and corrected as soon as possible. If any looseness is felt in the steering, the steering linkages can be observed while someone turns the steering wheel left and right. Watch the linkages for any evident play or uneven interaction between components to help pinpoint a problem. Wheel bearings should be cleaned and repacked with high temperature disc brake grease every 30,000 miles. Have the steering system checked for damage after a severe impact, such as striking large potholes or curbs, and front-end collisions. Observe the alignment of the steering wheel; a change in the alignment may indicate damage to the steering components or suspension.

Maintenance for the system entails adequate lubrication of the system. Use only a hand operated grease gun on the fittings. Grease fittings for the steering system are found on the both ends of the drag link (the bar connecting the steering gear to the axle), and on the steering drive shaft located between the steering wheel and steering gear. The correct wheel alignment promotes longer tire wear and ease of handling while minimizing the strain on the steering system and the axle components. Use NLGI #2 Lithium soap base lubricant for all steering linkage and brake components.

## *Alignment*

**Camber:**

Camber, as shown, is vertical tilt of wheel as viewed from the front of the vehicle. This is machined into the axle when manufactured and is not adjustable.

- "**Positive**" camber is an outward tilt of the wheel at the top.
- "**Negative**" camber is an inward tilt of the wheel at the top.

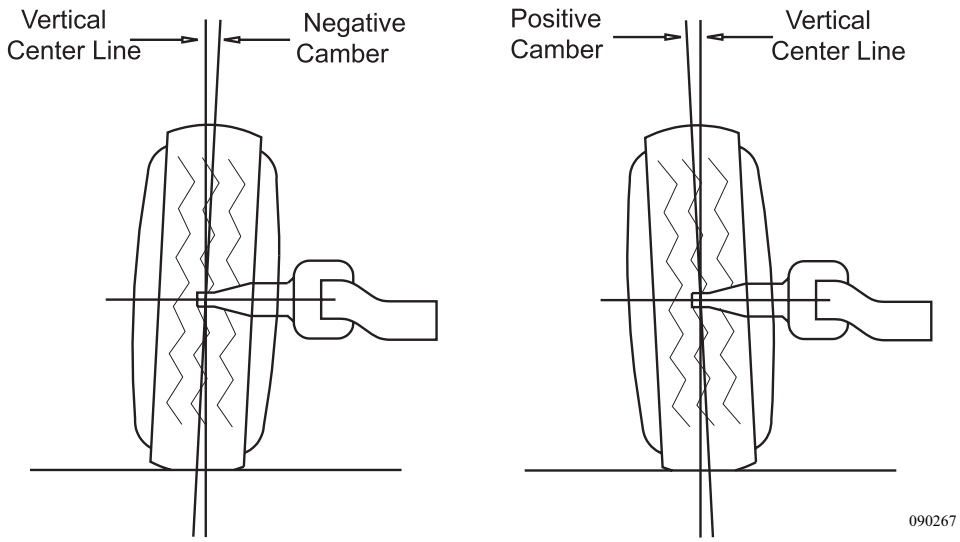

**Toe Setting:**

The toe setting represents different distances between the front and rear of the tires (measured at the vertical center line of the tires).

**Toe-in**:

Occurs when the tire front distance is less than the tire rear distance.

**Toe-out:**

Occurs when the tire front distance is greater than the tire rear distance.

Wheels are generally set with initial toe-in. As the vehicle operates tires tend toward a toe-out condition. By starting with an initial toe-in setting, a desirable "near zero toe-in" can be achieved when the vehicle is in motion.

Incorrect toe settings, where toed-in or toed-out, can have a significant affect on tire wear. The toe setting is adjusted by lengthening or shortening the cross tube.

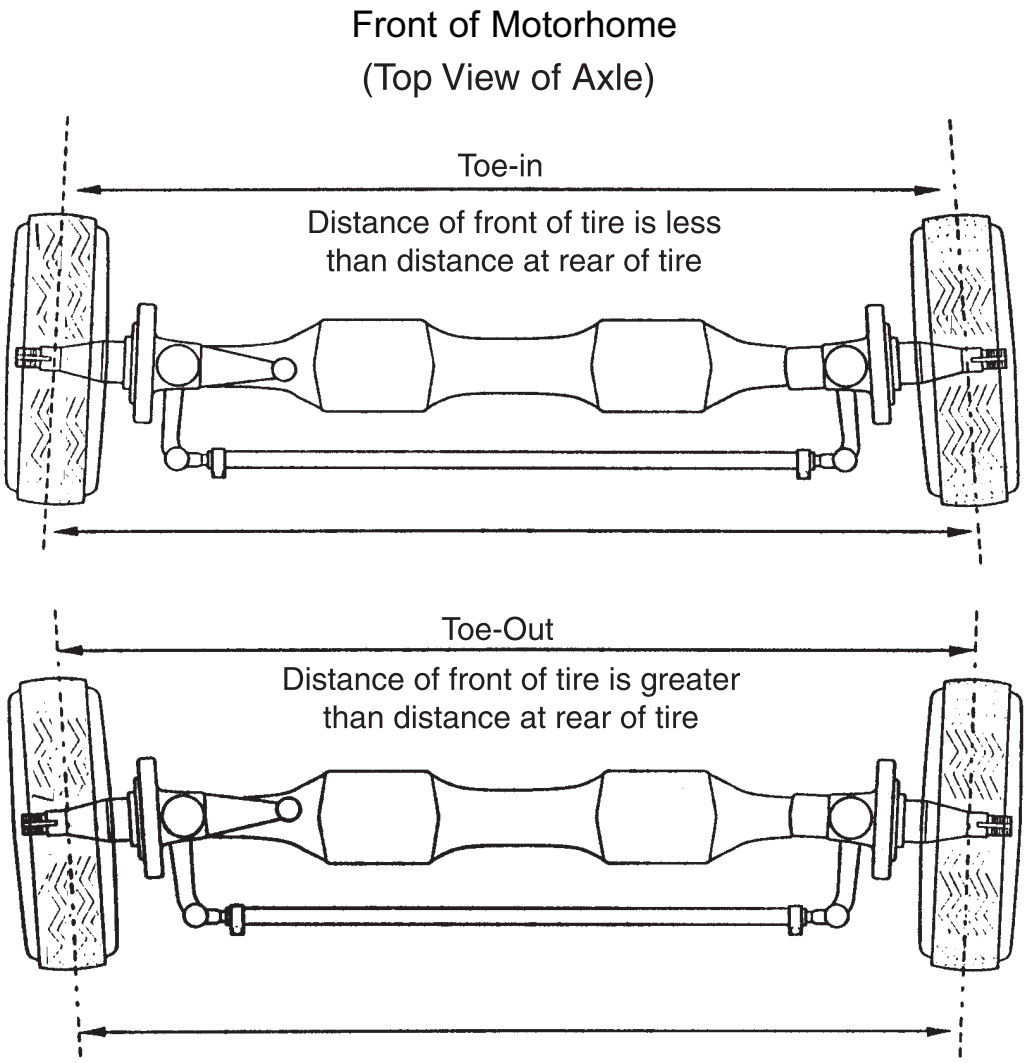

**Caster Adjustments:**

Caster is the fore and aft tilt (toward the front or rear of the motorhome) of the steering kingpin as viewed from the side of the motorhome.

"**Positive**" caster is the tilt of the top end of the kingpin toward the rear of the motorhome.

"**Negative**" caster is the tilt of the top end of the kingpin toward the front of the motorhome.

Setting the caster angle more positive than specified may result in excess steering effort and/or shimmy. Decreasing the angle may result in vehicle wander or poor steering return to center. The caster angle is determined by the installed position of the steer axle.

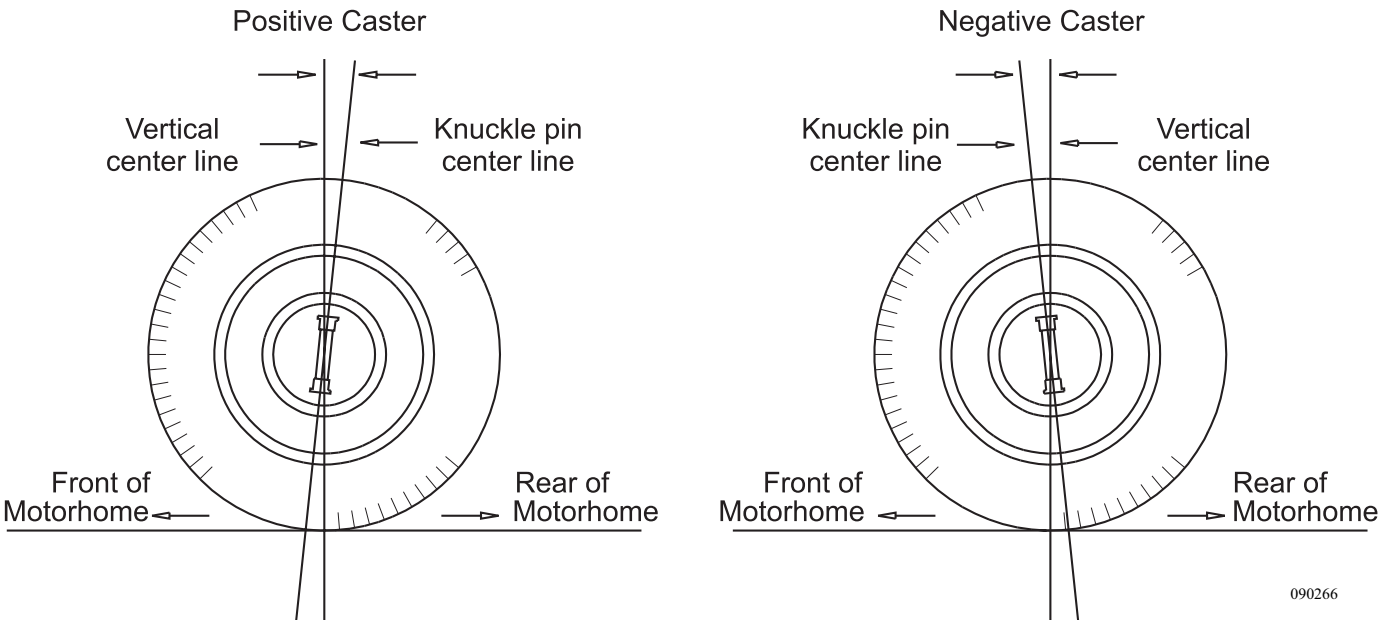


Left Front

| | Min. | Nominal | Max. |
|---|---|---|---|
| Camber | -0.15º | -0.35º | -0.65º |
| Caster | 3.50º | 4.50º | 5.50º |
| Toe | 0.018º | 0.03º | 0.042º |

Right Front

| | Min. | Nominal | Max. |
|---|---|---|---|
| Camber | -0.15º | -0.35º | -0.65º |
| Caster | 3.50º | 4.50º | 5.50º |
| Toe | 0.018º | 0.03º | 0.042º |

alignment spec chart.eps

The front axle components require periodic lubrication maintenance. Chock wheels for safety prior to accessing components underneath the motorhome.

### *Lubrication Maintenance Safety*

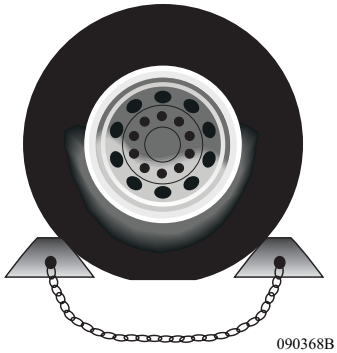


### *Steering Components*

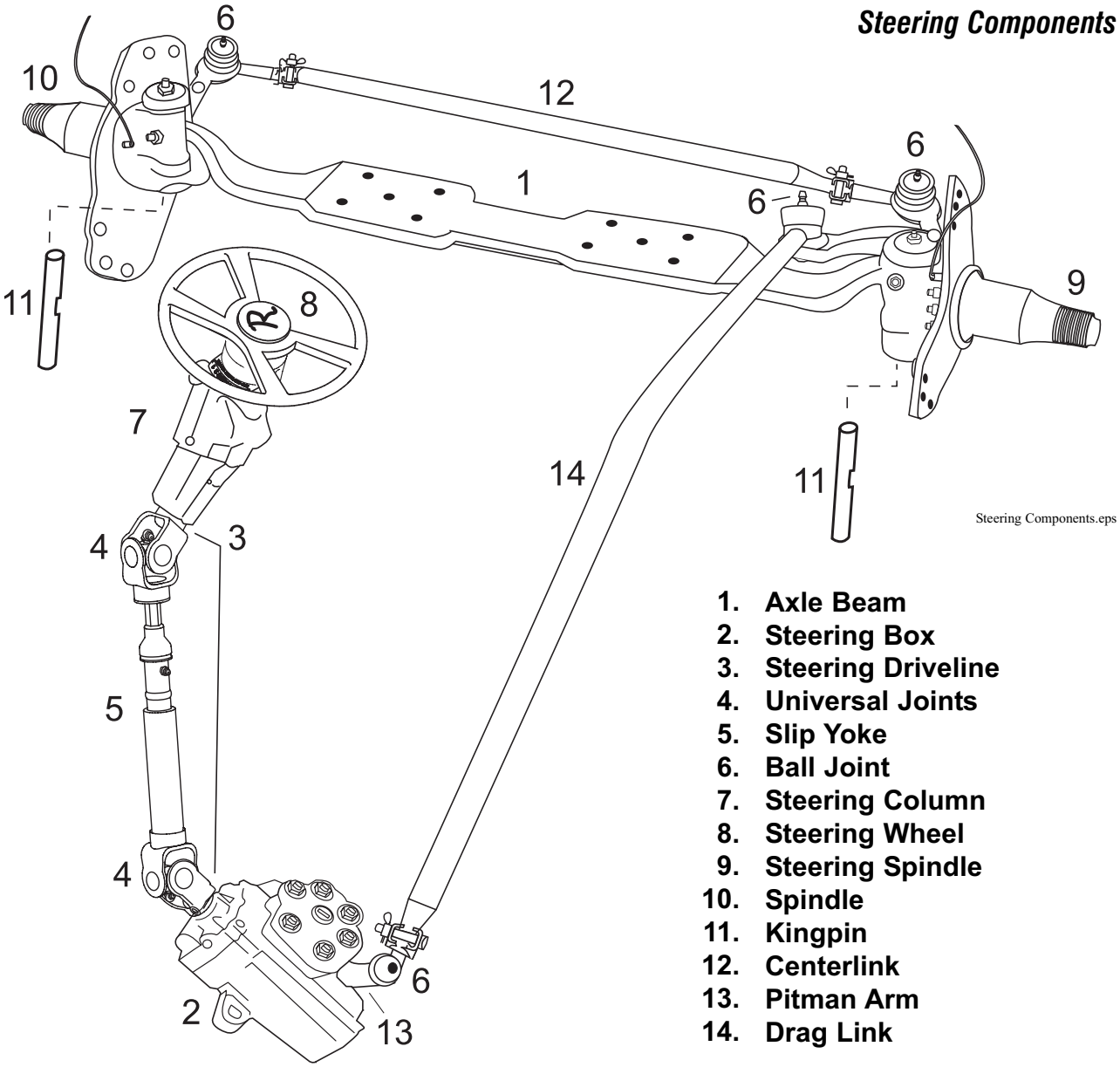


1. Axle Beam
2. Steering Box
3. Steering Driveline
4. Universal Joints
5. Slip Yoke
6. Ball Joint
7. Steering Column
8. Steering Wheel
9. Steering Spindle
10. Spindle
11. Kingpin
12. Centerlink
13. Pitman Arm
14. Drag Link

TYPICAL STEERING COMPONENTS

## Steering Column

The steering wheel connects to the steering box using a driveshaft. Service the steering driveshaft universal joints and slip yoke every 30,000 miles or annually. Remove the steering column cover to access the upper universal joint and slip yoke. The lower universal joint is accessed from underneath in the generator compartment behind the front electrical box.

**Greasing the Drive Shaft Universal Joints:**

1. Check the drive shaft for looseness. If loose or worn, repair the drive shaft as necessary.

2. Apply the specified grease at the grease fitting on the universal joint. Apply new grease until the new grease purges from all the seals.

3. If the new grease does not purge from the seals, disassemble and clean the joint or replace the universal joint. Do not lose any of the needle bearings.

**Greasing the Drive Shaft Slip Yoke and Splines:**

1. Check the drive shaft for looseness. If loose or worn, repair the drive shaft as necessary.

2. With finger, cover the rear air hole so grease flows to the front seal. Apply the specified grease at the grease fitting on the slip yoke. Apply grease until new grease purges and forces finger away from the air hole in the end of the slip yoke. Greasing interval is yearly or every 30,000 miles.

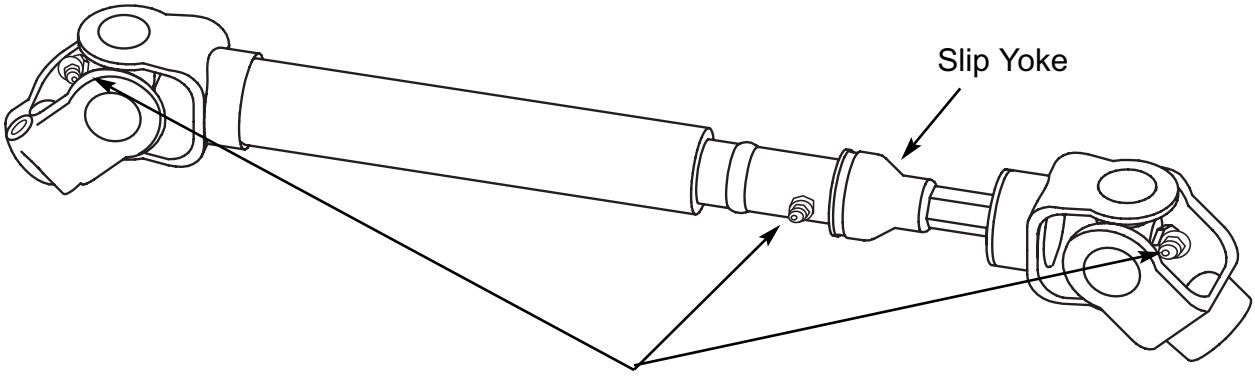


**LUBRICATION POINTS**

090349

## Drag Link

The drag link connects the steering box pitman arm to the steer axle. The movable joint (ball joint) uses sealed boots to prevent water intrusion. Do not rupture the boot when applying grease. Grease interval is six months or every 5,000 miles.

**NOTE: It will be necessary to start the motorhome and turn the steering wheel to access fitting(s).**

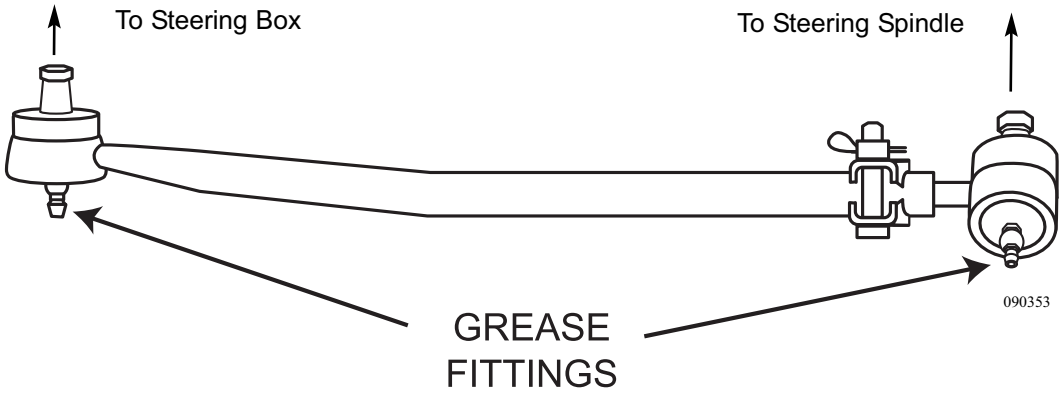


## Center Link

The center link is located on the backside of the steer axle. The center link attaches the two wheels together causing the right front to track with the left front. Greasing interval is every six months or 5,000 miles.

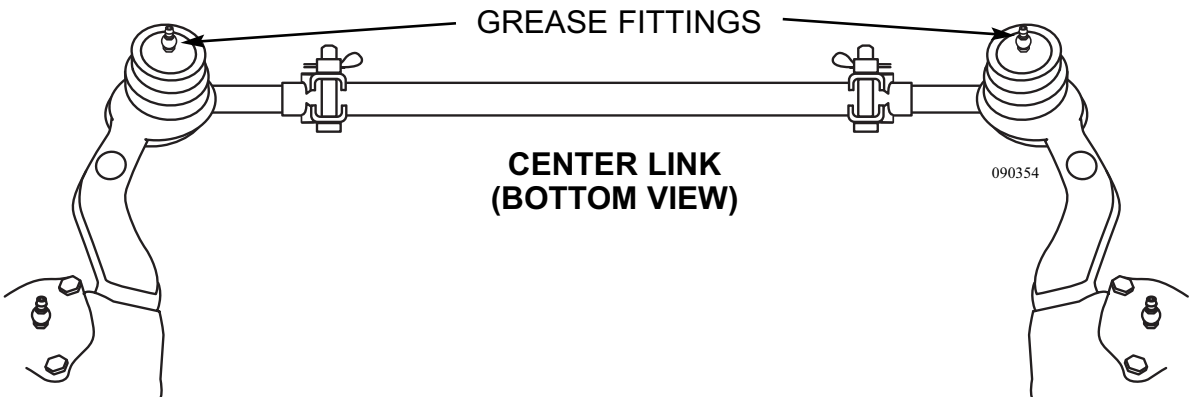


10

### *Steering Spindles*

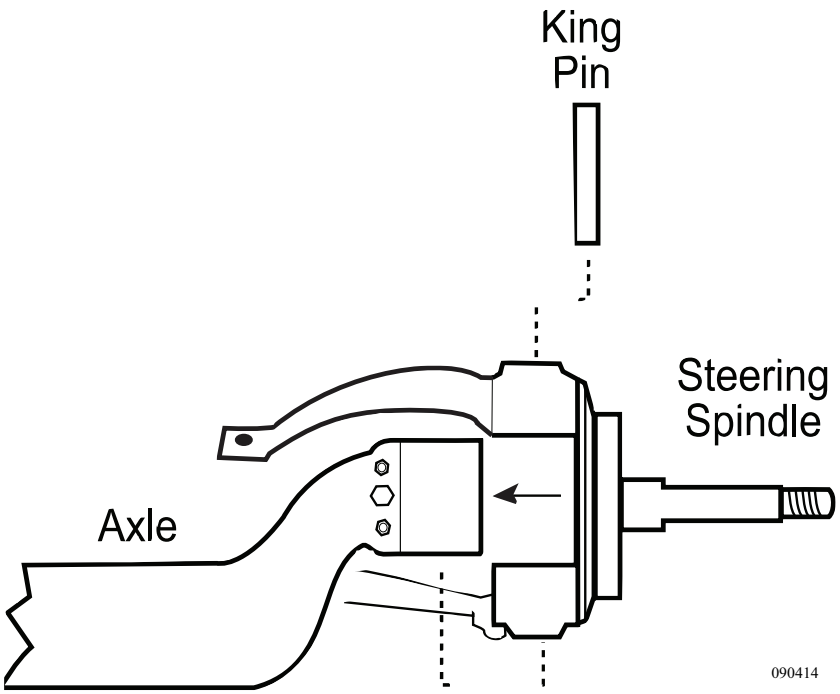


The steering spindles attach to the front axle and pivot on the kingpin. The wheel end assembly and brake system attach to the spindle. There are upper and lower lubrication points for the kingpin. The drag link attaches to the roadside spindle. After initially lubricating the roadside and curbside kingpins, rotate the steering assembly lock to lock (full left to right) then move assembly back to center. This purges any remaining air pockets. Continue lubricating the kingpins until new grease purges with no air pockets. Greasing interval is every six months or 5,000 miles.

### *Control Arm Bushings*

Control arms align the axles perpendicular with the frame. The panhard bar controls side to side motion of the axles in the frame. Control arm bushings and panhard bar bushings do not require lubrication.

## STEERING GEAR

Maintain the grease pack behind the output shaft's dirt and water seal as a general maintenance procedure at least twice a year. The grease fitting is provided in the housing trunnion. Use NLGI grade 2 or 3 multipurpose chassis lube and use only a hand operated grease gun on the fitting. Add grease until it begins to extrude past the sector shaft dirt and water seal.

Power steering is provided by using hydraulic pressure to assist rotating the output shaft of the steering gear. Located at the end of the input shaft of the steering gear is poppet valve and worm drive. The poppet valve directs the hydraulic fluid pressure to a type of spool. The worm drive threads in the center of the spool. When in the center position, pressurized hydraulic fluid bypasses the spool. When a turn is made, the poppet valve shifts to one direction or the other, directing the hydraulic pressure to one side of the spool depending on turning direction. The hydraulic fluid is then cooled before returning to the reservoir.

**Inspect** for signs of leakage when performing fluid level checks.

Changing the hydraulic filter at regular intervals will help ensure trouble-free operation.

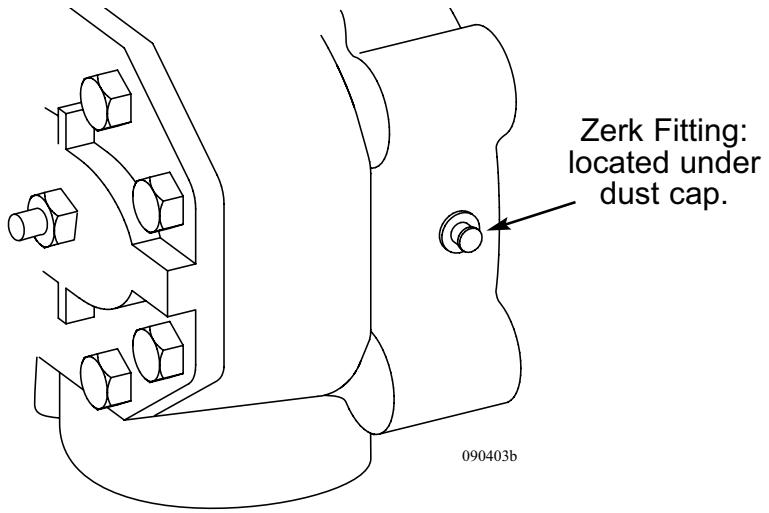


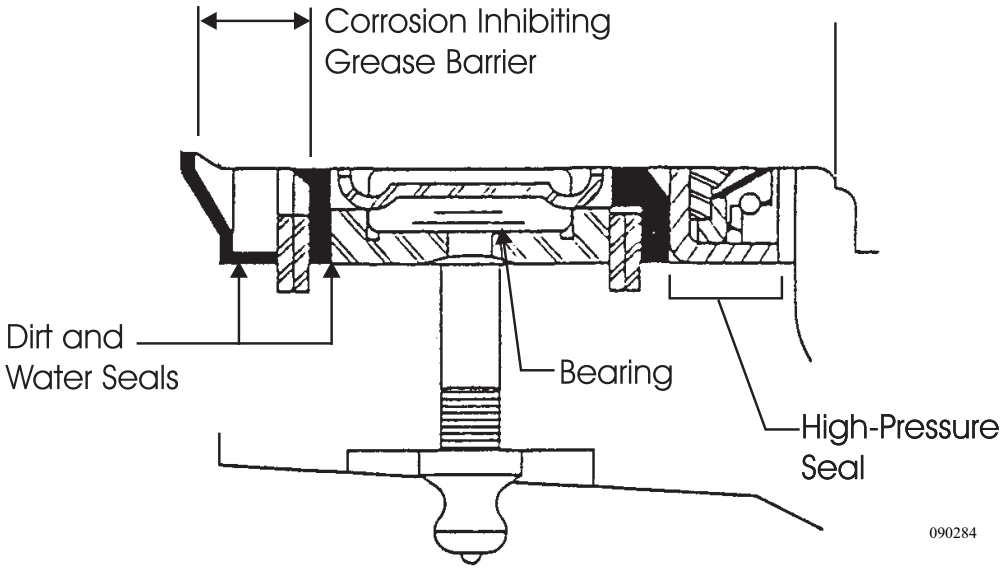

## DRIVE AXLE & DRIVE SHAFT

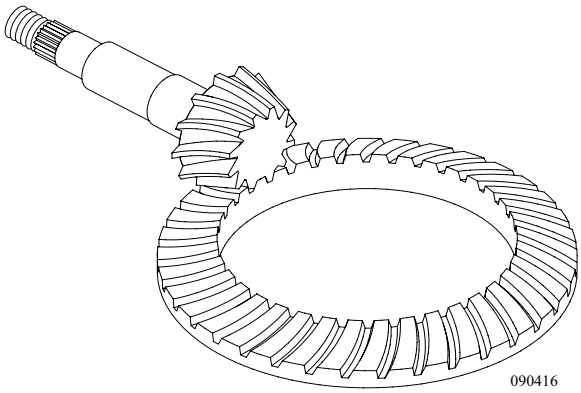


*Ring and Pinion Gears*

**Drive Axle:**

The chassis drive axle is a single reduction axle, with a gear ratio of 4.30:1. The differential gears consist of a hypoid pinion and ring gear set and bevel differential gears. The differential carrier can be removed from the axle housing as a unit in order to perform repairs.

All power from the engine to the rear tires is transferred through the rear axle. For this reason, it is important that maintenance be performed on the axle as required to avoid premature wear of the gears and bearings in the axle.

**Drive Axle Lubricant:**

The rear axle is filled with synthetic gear oil meeting MIL-L-2105D specifications. Change interval is every 250,000 miles, or 36 months, whichever occurs first.

During lubricant change, fine metal particles will be observed clinging to the magnetic fill and drain plugs of the axle. These particles are normal wear particles from the axle components, but will cause faster than normal wear of the axle components if allowed to circulate through the lubricant. It is recommended that the magnetic plugs be tested, if not replaced, at each lubricant change when petroleum-based lubricants are used, or every 100,000 miles when synthetic lubricant is used. These plugs should have sufficient magnetic strength to pick up a 1.5 pound weight of low carbon steel. Never replace a magnetic plug with a non-magnetic "pipe plug" as they will not keep the lubricant clear of metal particles or seal properly.

The level of lubricant in the rear axle should be checked every 30,000 miles or annually, whichever comes first. This will ensure adequate lubricant in the axle for proper operation.

**Proper Drive Axle Lubricant Level:**

- Regular inspection of the drive axle lube levels is an essential maintenance procedure.
- Clean the area around the fill plug, which is located approximately halfway up the axle housing bowl.
- Remove the fill plug and observe the lubricant level.
- The lubricant should be level with bottom of the hole.
- Important: The lube level close enough to the hole to be seen or touched is not sufficient. The lube must be level with the hole.
- Correct the level as necessary.
- Re-install the fill plug and tighten to 35 to 50 ft-lbs.

**NOTE: When checking the lube level also check the housing breathers. Clean the breathers if dirty or replace them if damaged.**

**To Drain and Replace Lubricant:**

With the motorhome parked on a level surface and rear axle warm, place a large container under axle.

1. Remove drain plug and allow axle to drain completely.
2. Dispose of oil properly.
3. Clean the drain plug and test (replace the drain plug if needed).
4. Install and tighten drain plug to 35-50 ft-lbs.
5. Clean the area around the fill plug from the axle-housing bowl.
6. Fill the axle with approved lubricant until the level is even with the bottom of the fill plug hole.

**WARNING: When checking or changing the lubricant, always ensure that the axle is not "hot." Oil temperature 90º F or hotter can easily cause severe burns.**

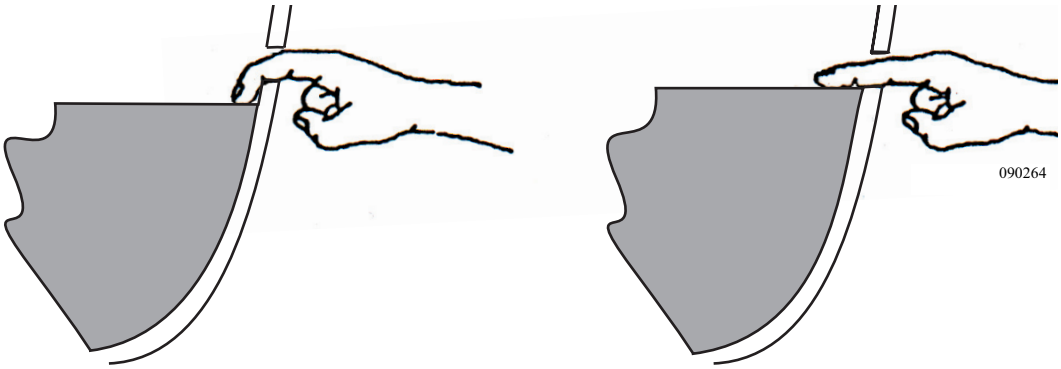


Incorrect Oil Level

Correct Oil Level

**Drive Shaft:**

The drive shaft transfers the power produced by the engine to the drive axle. A worn or out of balance driveline causes chassis vibration that generally increases in intensity with road speed.

**NOTE: It will be necessary to move the motorhome forward or backward to access all fittings on the drive shaft.**

10

**Greasing the Drive Shaft Universal Joints:**

1. Check the drive shaft for looseness. If loose or worn, repair the drive shaft as necessary.
2. Apply the specified grease at the grease fitting on the universal joint. Apply new grease until new grease purges from all the seals.
3. If new grease does not purge at the seals, loosen the bearing cap bolts and re-grease until all four caps purge. If new grease still does not purge, disassemble and clean or replace the universal joint.

**Greasing the Drive Shaft Slip Yoke and Splines:**

1. Check the drive shaft for looseness. If loose or worn, repair the drive shaft as necessary.
2. With finger, cover the rear air hole so grease flows to the front seal. Apply the specified grease at the grease fitting on the slip yoke. Apply grease until new grease purges and forces finger away from the air hole in the end of the slip yoke. Greasing interval is 10,000 miles or annually.

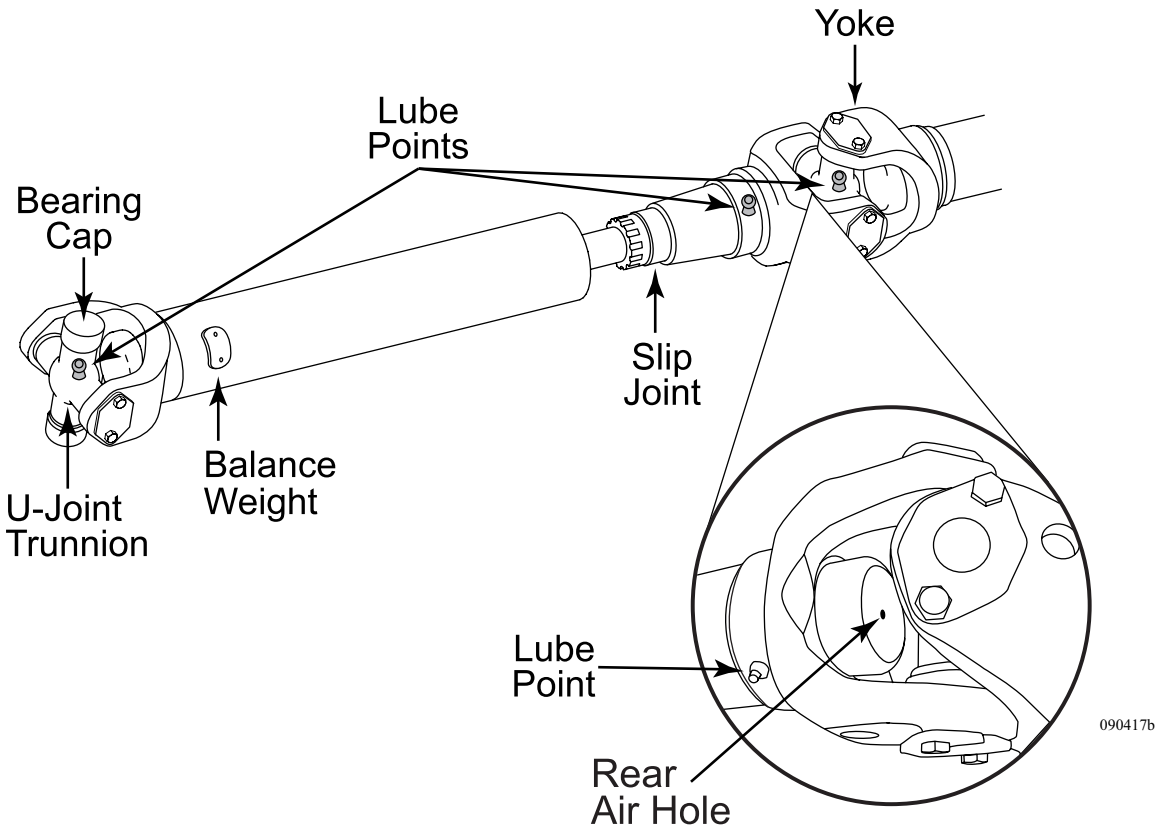

090341

**Warning: Rotating shafts can be dangerous. Rotating shafts can snag clothes, skin, hair, hands, etc. causing serious injury or death. Do not work on or near a shaft "with or without a guard" when the engine is running.**

## U-Joint Angles, Phasing & Driveline Balance

Correct U-joint working angles U-joint phasing, and driveline balance is vital to maintaining a quiet-running drivetrain and long life of drivetrain components (including driveline components).

When in phase, the slip yoke lugs (ears) and tube yoke lugs (ears) are in line. Normally this is the ideal condition and gives the smoothest running shaft. There may be an alignment arrow stamped on the slip yoke and on the tube shaft to assure proper phasing when assembling these components. If there are no alignment marks, they should be added before disassembly of the shaft to assure proper reassembly.

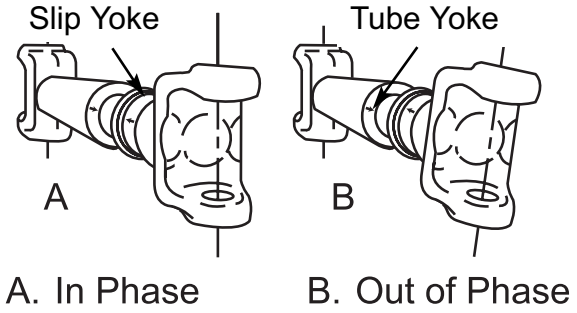

090337

Phasing is relatively simple on a two-joint set, be sure that the slip yoke lugs and the tube yoke lugs are in line.

The U-Joint working angle is the angle formed by the intersection of the drive-shaft centerline and the extended centerline of the shaft of any component to which the U-joint connects. Because the double oscillating motion of a U-joint that connects angled shafts causes a fluctuating speed difference between the shafts, the effect created by the U-joint at one end of the shaft must cancel the effect created by the U-joint at the other end. This is done by making U-joint working angles at both ends of the driveshaft approximately equal, with the U-joints in phase. If the yoke lugs at both ends of the shaft are lying in the same plane (a plane which bi-sects the shaft lengthwise), the U-joints will be in phase.

Any condition which allows excessive movement of a driveshaft will cause driveline imbalance: loose end yoke nuts, loose U-joint bearing cap retaining capscrews, worn U-joint trunnions, bearings and worn slip-joint splines.

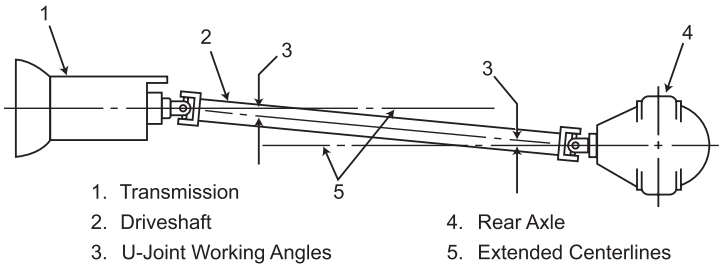

090336

Among the most common causes of U-joint and slip joint damage is lack of lubrication. To keep the motorhome operating smoothly and economically, the driveline must be carefully checked and lubricated at regular intervals.

## Lubrication Maintenance

10

The slack adjuster and camshaft need to be lubed periodically to ensure proper brake operation. Lubricate every 10,000 miles or 3 months.

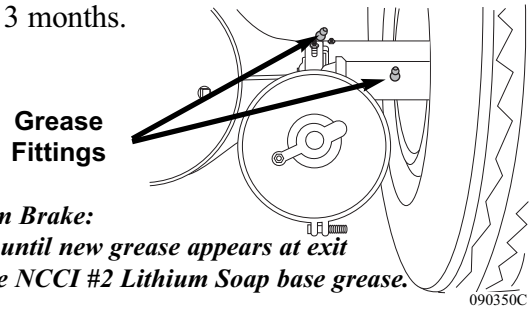


***Rear Drum Brake:***
***Lubricate until new grease appears at exit points. Use NCCI #2 Lithium Soap base grease.***

090350C

## TAG AXLE

Navlowarmrest02.Tif

Tag Axle

The switch for the tag axle is located on the roadside lower switch panel. Two lights are located on the switch: One to illuminate when the headlights are turned on, the other to illuminate when the tag axle switch is on. Raise the tag axle when performing severe or tight maneuvering under 5 mph to prevent scuffing the tag axle tires. A beeping alarm sounds when the switch is on.

**The tag axle raises in the following modes:**

- When the switch is on and the transmission is in neutral, reverse or first gear.
- With the tag axle in the up position there is not a specific height requirement other than the tire should be off the ground. If extra clearance is desired, moving the lift chain up one link on each side can increase ground clearance with the tag axle in the raised position.

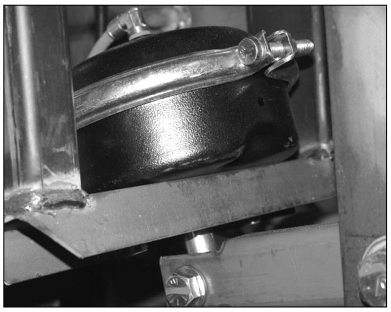

*Tag Axle Lift Chamber* Tagairpot2.tif

**A description of what occurs in a motorhome equipped with air leveling when the tag axle switch is on:**

- The tag axle switch supplies 12 Volt DC to the 14 gauge yellow with green stripe wire to the air valve located at the roadside rear.
- The rear air valve applies air pressure to the orange air line at both tag axle lift chambers to raise the axle.
- Air pressure in the tag axle air bags is released. The tag axle remains up until the switch is turned off.

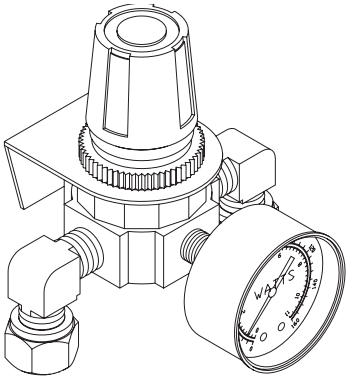

090256

The amount of weight carried by the tag axle may be adjusted by changing the amount of downward force applied to the tag axle. Changing the amount of weight carried by the tag axle affects weight distribution between the tag, drive and steering axles. The amount of down force applied to the tag axle is controlled by the amount of air pressure in the tag axle air bags. An adjustable pressure regulator located in the engine compartment sets the amount of air pressure in the tag axle air bags. Regulator pressure is preset at the factory and may require adjustment to obtain the proper weight distribution on all axles. To determine the correct setting of the pressure regulator the motorhome will need weighed after it has been loaded for travel.

All tag axles use oil to lubricate the wheel bearings. The oil is drained and refilled without removing the wheel end assembly. Remove the hubcap to access the bearing cover and drain plug.

**Inspect the oil level before every trip or every 5,000 miles. The motorhome should remain motionless for at least 30 minutes in order to stabilize the oil level before inspecting.**

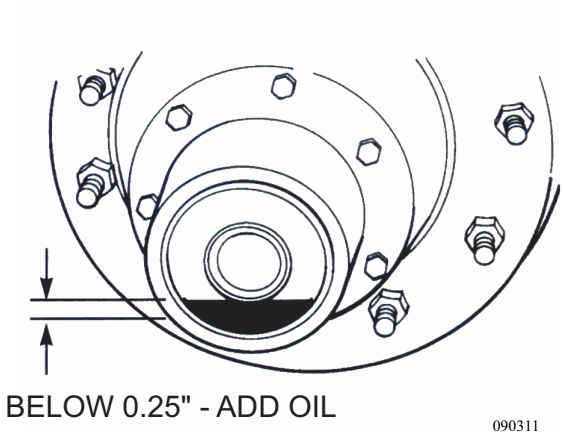


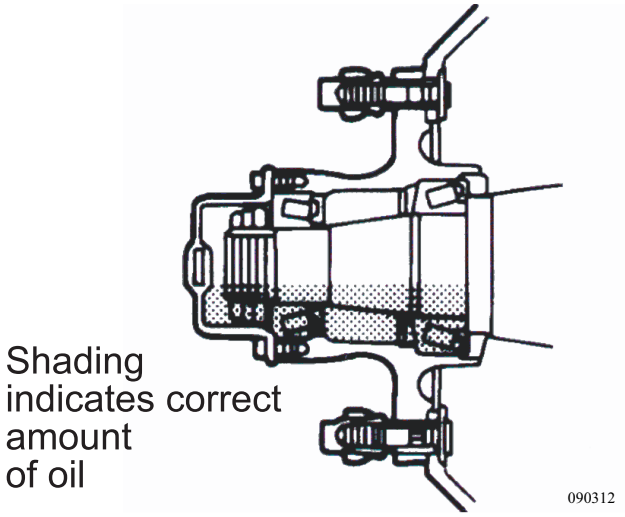


**To inspect the oil level:**
- The motorhome must remain stationary for 30 minutes.
- Remove the chrome hubcap.
- Locate the full and add mark on the outside of the clear plastic cover.
- If the lubricant level is low, add the recommended fluid until full.

## Oil Lube Intervals

The recommended oil change interval is based on operating conditions, speeds and loads. Limited service applications may allow the recommended interval to be increased. Severe applications may require the recommended interval to be reduced. For more information, contact a Dana/Eaton service representative.

**Recommended Interval Change:**
- Change the fluid whenever the seals are replaced, the brakes are relined or at 30,000 miles (48,000km). However, check the lubricant twice a year (spring and fall) for contamination. Change as needed.
- If yearly mileage is less than 30,000 miles, change the fluid twice a year (spring and fall).

**Lubricant Type:**
- Shell Hypoid gear oil, GL-5, S.A.E. 80w/90. Specifications, minimum ambient temperature - 15º F (-26.1º C). There is no maximum ambient temperature. Lubricant temperature must never exceed 250º F (+121º C).

**To Drain:**
- Place a suitable container below the bearing cover and remove the drain plug. If the cover does not have a drain plug, remove the screws retaining the cover plate to drain the lubricant.
- Replace plug or cover plate and fill bearing assembly with the recommended lubricant.

## SHOCK ABSORBER

090315

The shock absorber by definition is a hydraulic device used to dampen suspension/body movement. Road surface irregularities are compensated for by the shock absorber. The roadmaster chassis incorporates the "Bilstein" shock in the design of the exclusive air glide suspension system. This shock absorber is a telescopic, mono tube unit filled with nitrogen gas and hydraulic oil. The result of the mixture is uninterrupted damping for the smallest of wheel deflection.

By design, a self lubricating seal is used which will allow approximately 10% of the total oil capacity to pass onto the piston rod. The gradual process of oil loss does not affect the performance of the shock absorber during the service life. This process will be evident after a long period of service by an oil film on the body of the shock absorber. The appearance of a coating or film on the body or rod is completely normal, it is an indication the shock is functioning normally.

Road holding, handling, balance and braking characteristics all can be contributed to the shock absorber. The operating conditions for which the shock absorber must endure will determine the life span. However, since the only moving part is the piston rod, there are no springs, hinges or pins to wear out, get weak or deteriorate.

## LEVELING - HYDRAULIC (Optional)

A remote control panel located next to the driver seat operates the leveling system. The three point leveling system features a multiple warning system with **Jacks Down** light and a warning bell sounds when any jack is extended between 2 to 6 inches from fully retracted position. The leveling system pump is located in the generator compartment.

**CAUTION: Prior to any leveling procedures it is important that all jacks be in contact with the ground in order to stabilize and support the frame. The hydraulic jack system is designed to reduce sight selection problems and stabilize the motorhome when parked. No single jack should be used solely to level the motorhome. Using an improper leveling process can result in applying excess torsion stress/twist to the chassis, frame and body, resulting in damage to the windshield or entry door malfunction. The leveling jacks are not designed for changing tires. This can cause problems with the suspension system, frame alignment and damage to the windshields. Never use the jacks to elevate any wheel position off the ground.**

**CAUTION: Before leveling the motorhome survey the area around and under the motorhome for obstructions that can damage the motorhome or undercarriage components when the air bags are deflated.**

**CAUTION: Hot asphalt, gravel or dirt may not support the weight that is placed on the hydraulic jack pads. Place thick plywood under the jack pads to help disperse the weight. If blocking up a rear jack pad to gain added clearance when the motorhome is on a slope, place a wheel chock at the opposite set of rear wheels to prevent the motorhome from rolling.**

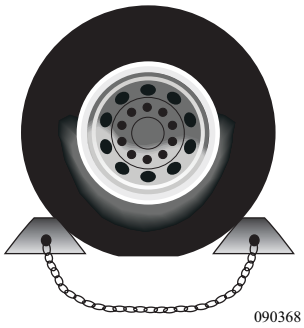


**Leveling System Operation:**

When operating the leveling system, it is important that all jacks are in contact with the ground so the frame is properly stabilized. Once all jacks are in contact with the ground, extend the front jack an additional ½". This allows the front jack to act as a pivot point. Incrementally extend each jack in such a manner as not to apply excessive stress/twist to the frame.

The leveling system was designed to reduce site selection problems. If possible, park the motorhome with the front facing downhill. If additional height or surface support is needed, construct 1' x 1' wooden blocks made from two pieces of ¾" plywood for a total thickness of 1 ½". Drill a hole in one end, and use the awning hook to slide the block under the jack pad.

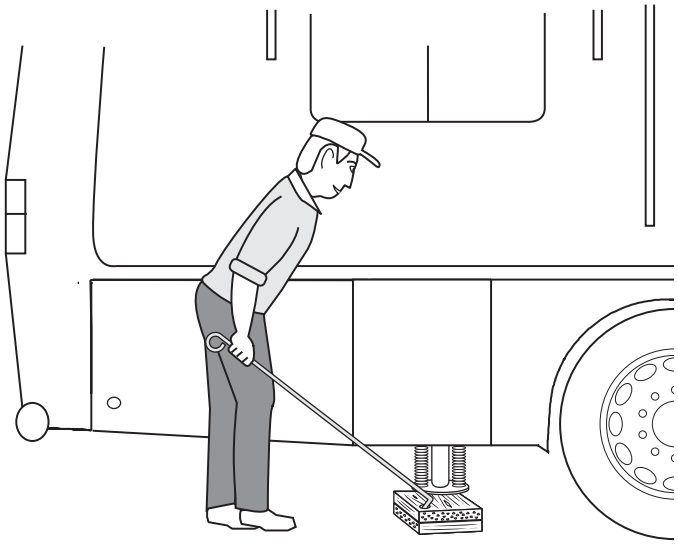


**CAUTION: Ensure the potential jack contact points are clear of obstructions or depressions before operation. Keep all people clear of the motorhome during the leveling system operations. Never expose hands or other parts of the body near hydraulic leaks. Hydraulic lines are under high pressure. Oil leaks may cut and penetrate the skin causing serious injury.**

**CAUTION: Damage to the mud flap may occur if it is located over a raised area when suspension is lowered. DO NOT move the motorhome while jacks are in contact with the ground or extended. Damage to the jacks may occur. DO NOT use jacks to raise wheels off the ground. Damage to the motorhome may occur.**

**Prior to Leveling:**

There are some essential steps to follow prior to operating the leveling system:

- Select a level site if possible. If the site is not level, select another site or park the motorhome with the front facing downhill.
- Lower the air suspension by stepping on the brake several times until system air pressure is below 60 psi. With the ignition on, push and hold the Air Dump switch to lower the suspension. This reduces the amount the jack will need to extend before making contact with the surface.
- Prior to any leveling procedures it is important that all jacks be in contact with the ground to stabilize the frame. This reduces the ability of any one jack to induce excessive stress/twist to the frame as would extending one jack without the others supporting the frame. No single jack should be used to solely level the motorhome.
- If additional height or surface support is needed, construct a 1' x 1' wooden block made from two pieces of ¾" plywood for a total thickness of 1½". Drill hole in corner and use awning wand to slide wooden block under jack pad.
- The Automatic function of the leveling system should only be engaged when the surface is relatively level and solid to prevent excess twist/stress to the frame.
- When operating the system manually, lower the front jack first. The front jack will be the pivot point for the chassis. This reduces stress/twist to the chassis and body of the motorhome. Torsion stress is significantly reduced when operating the system properly. Incrementally extend jacks rather than over-extending a single jack. Damage resulting from improper leveling procedures and excess twist/stress can range from windshield damage to jamming of the entry door.
- The remote control switches will operate with a minimum of 7.5 Volts DC. Optimum requirements for operating the system are voltages above 9.6 Volts DC.

**Leveling System Safety Features:**

The leveling system has safety features to prevent a jack from extending during travel. The control panel will not activate until these safety features are in place.

- Turn the ignition switch to the **Run** position.
- Place the transmission in Neutral.
- Apply the parking brake.

**Warning Features Include:**

- A warning system consisting of flashing lights and a bong alarm when the system is on or a jack is down.
- The bong alarm may activate momentarily when driving over rough roads, or negotiating curves and corners. Usually this indicates low fluid level.

**Remote:**

The remote control panel is compromised of three **Retract/Extend** switches, an **Automatic Leveling** / **Retract All** switch and a power **ON/OFF** switch.

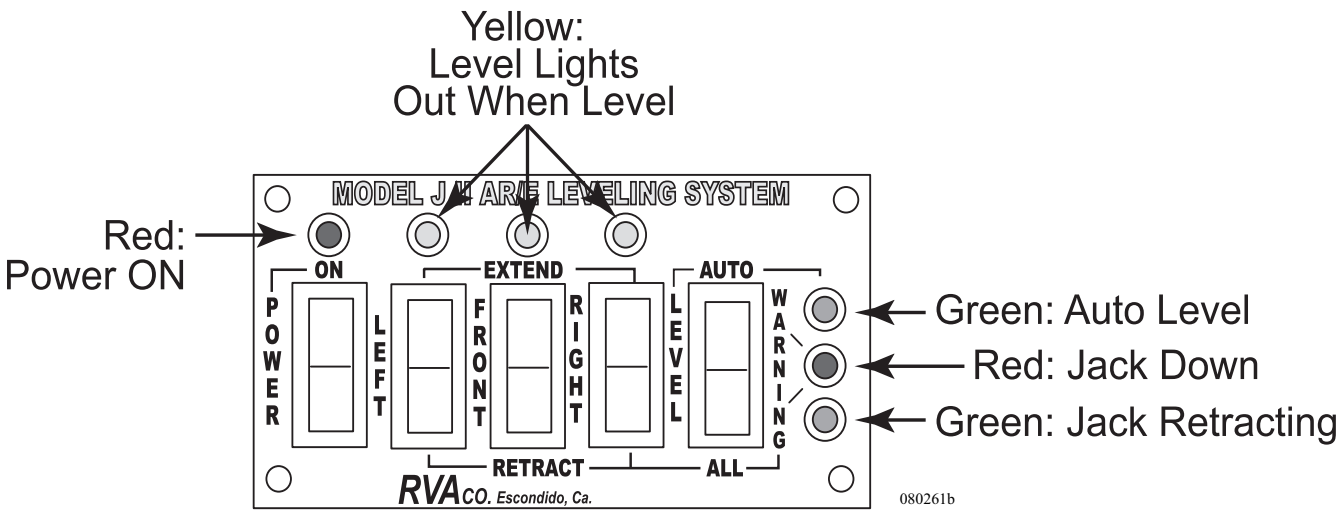


**Indicator Lamps:**

- A **yellow** lamp above any rocker switch indicates a low level condition.
- A flashing **green** lamp indicates the system is in **Automatic Leveling** mode or **Jacks All Retract** mode.

10

## Manual Leveling

**Manual Operation:**

When manually operating the leveling system, it is important that all jacks are in contact with the ground so the frame is properly stabilized. Once all jacks are in contact with the ground, extend the front jack an additional ½". This allows the front jack to act as a pivot point. Incrementally extend each jack in such a manner as not to apply excessive stress/twist to the frame.

- Apply the parking brake.
- Turn the ignition switch **ON**, do not start the engine. Be sure the transmission is in neutral.
- Lower the air suspension by making several brake applications until system air pressure is below 60 psi. With the ignition on, push and hold the **Air Dump** switch to lower the suspension.
- Turn on the jack control **Power** switch.
- Each yellow light and rocker switch combination corresponds to each jack as positioned on the chassis.
- To extend a particular jack, push and hold the corresponding rocker switch to **Extend** until the **yellow** light goes off. That particular jack is in the level position.
- To retract a particular jack, push and hold the corresponding rocker switch until the jack fully retracts.
- Turn **OFF** the **Power** switch.
- Turn **OFF** the **Ignition** switch.

**CAUTION: Damage to the mud flap may occur if the mud flap is located over a raised area when the suspension is lowered.**

**CAUTION: Do not move motorhome while the jacks are still in contact with the ground or extended, damage to the jacks can occur. Do not use the jacks to raise any wheels off the ground. Damage to the motorhome may occur.**

## Automatic Leveling

**Automatic Operation:**

The **All Jacks Retract** mode or **Manual** mode can be engaged at any time during automatic leveling operation. Prior to and during the automatic leveling process, it is essential that there is no movement in the motorhome.

**To begin automatic operation:**

- Apply the parking brake.
- Turn the ignition switch to the **ON** position. Be sure the transmission is in neutral.
- Turn the jack control **Power** switch **ON**.
- Press the **Level** switch to **AUTO**.
- The top **green** light will start blinking. After a ½ second delay, the pump motor will activate and all jacks will extend.
- The system will attempt to complete the leveling process in one operation. The motorhome is level when all **yellow** lights, as well as **green** lights, go out.
- If leveling is unsuccessful on the first cycle the system will attempt to level four subsequent times at seven second intervals.
- If both **green** lights start flashing alternately the system has reached maximum extension on one or more jacks. One or more **yellow** lights will blink, indicating additional height is required under one of the jack pads.
- When the leveling process is complete the **red** warning light will flash, indicating the jacks are down.
- Turn **OFF** the jack control **Power** switch.
- Turn **OFF** the **ignition** switch.

**WARNING: When the jacks are extended, a red Jacks Down warning light will blink and the bong alarm will sound. The alarm will sound if the jacks are down and ignition switch is turned ON.**

**Automatic Retract:**

Prior to retracting the jacks, it is advisable to start engine and build air pressure.

- Turn the **ignition** switch **ON**. Place the transmission in neutral.
- Confirm that the parking brake is applied.
- Turn the jack control **Power** switch **ON**.
- Momentarily press the level switch to **ALL**.
- The **red** warning lamp will stop blinking and the "bong" alarm will silence when all jacks are retracted.

**INSPECTION: Before moving the motorhome always perform a visual inspection to be sure that all jacks have fully retracted. Remove any debris that may be on the jack pad.**

***Retracting Leveling Jacks***

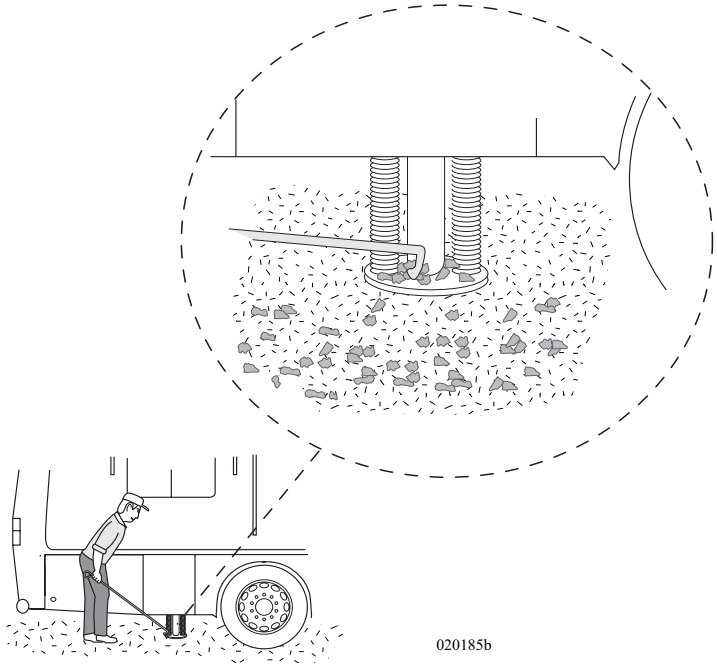

Hydraulic pressure, in all jacks, is automatically released when the **All Jacks Retract** switch is pressed. The jacks retract by the weight of motorhome and the retract springs on each jack. The bottom **green** light will begin blinking and all jacks will retract. This operation is on a four-minute timer. After four minutes, the **green** light will stop blinking and go out.

## *Manual Retract Valves*

The hydraulic pump is located at the curbside front with easy access through the generator compartment. The manifold and valve assembly is mounted on the pump motor, providing access to the manual retract valves.

In case of mechanical or electrical failure that would prevent the leveling jacks from being automatically retracted, the motorhome is equipped with manual emergency retract valves. The manual retract system releases fluid that is under pressure in each jack and allows the fluid to return to the reservoir.

**CAUTION: The motorhome will raise or lower when the manual retract valves are opened. If it becomes necessary to manually retract the jacks, do not crawl under the motorhome to access the valves. Make sure there is sufficient clearance so the valves may be opened safely.**

**To operate the manual system:**

- Turn all three T-handle valves counterclockwise until they stop.
- When the jacks are fully retracted, rotate all the valves fully clockwise. In case one of the jacks is not holding pressure, one of the manual retract valves may not be fully tightened.

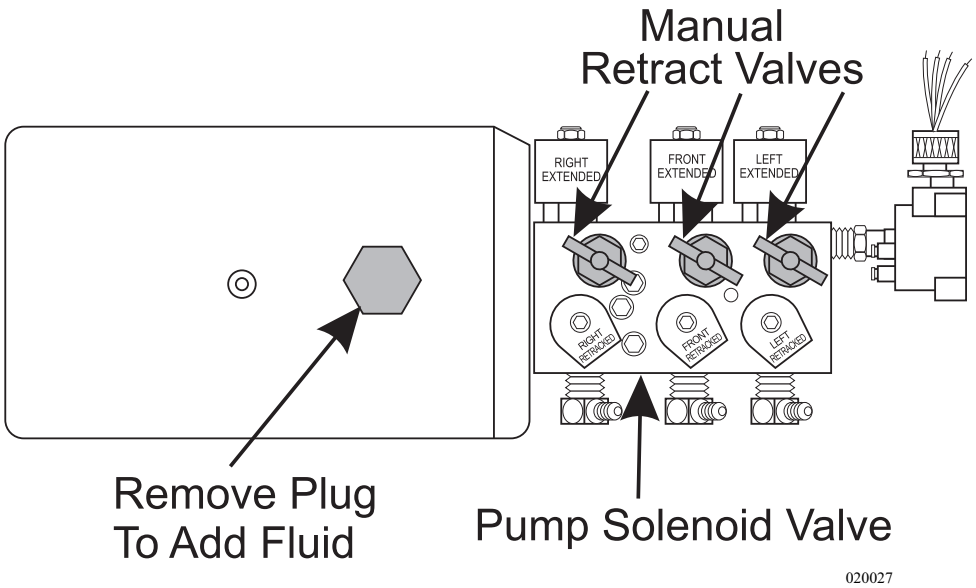

Occasionally, when the jacks are fully extended, wipe off the dirt from the jack rod. This will help lengthen the life of the jacks. How often this is done can vary from the amount and type of usage of the jacks. *Dexron III®* will serve as a solvent, as well as a lubricant. Occasional oil or grease on the extended jack ram is normal and aids in the lubrication of the seals.

**Component Replacement Model JII-45S:**

The system is designed to be self-purging in the event any component of the hydraulic system has been removed or repaired.

**To Purge the System:**

• Fully extend and retract each jack twice.

**Calibration:**

The transmitter module may require calibrating to obtain an accurate level indication. The calibration procedure requires two persons for convenience and accuracy. This should only be performed by qualified service technicians.

**Adding Fluid:**

An indication of a system needing fluid is the bong alarm intermittently sounding when turning corners or the pump whining or gurgling. Use *Dexron III®* automatic transmission fluid to fill the reservoir.

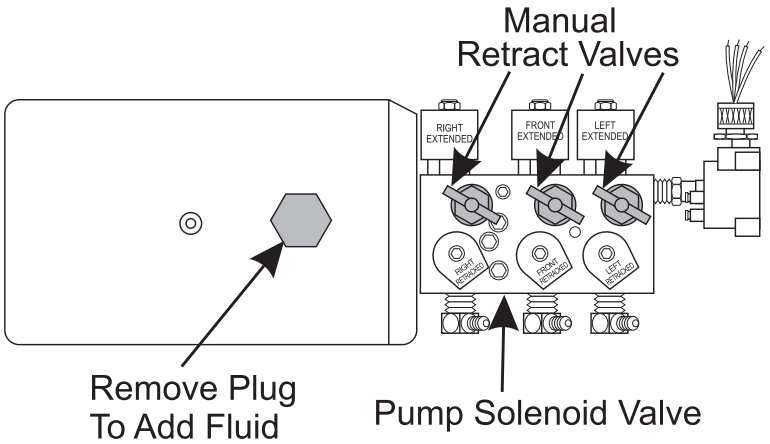


020027

**To Fill the Reservoir:**

1. Turn the **ignition** switch to the **ON** position. Turn the jack control **Power** switch **ON**.
2. Extend any jack six inches from the fully retracted position. All other jacks remain fully retracted.
3. Unscrew the reservoir cap from the top of the reservoir.
4. Open a window or the entry door so the bong alarm is audible from outside the motorhome. Slowly fill the reservoir with fluid until the bong alarm stops sounding.
5. Replace the reservoir cap.
6. To retract the extended jack, push the **RETRACT** button.
7. Turn the jack control **Power** switch **OFF**.
8. Turn **OFF** the **ignition** switch.

## LEVELING - AIR

A touch panel, computer controlled air leveling system uses the air springs to level the motorhome. The system can be set to level the motorhome automatically or the system can be operated manually.

**CAUTION: The ignition must be ON and the system set to travel mode for the air suspension to operate. This is critical to note in the event the motorhome requires emergency towing.**

**Control Panel Buttons:**
Several buttons are located on the control panel.

**Emergency Stop** = Turns the control panel off except when the ignition key is in the on position and the park brake is released.

**Travel Mode** = Places the system in travel mode and turns off the Master Warning lamp. Air system pressure must be at least 80 psi.

**Air** = Park brake must be applied to enable this function. The ignition key must be in the ON position. Press once to set system in manual level mode or press twice to begin auto-level mode.

**Dump** = Pressing this button with ignition key in the on or accessory position will deflate the air in the air springs. System pressure is not affected.

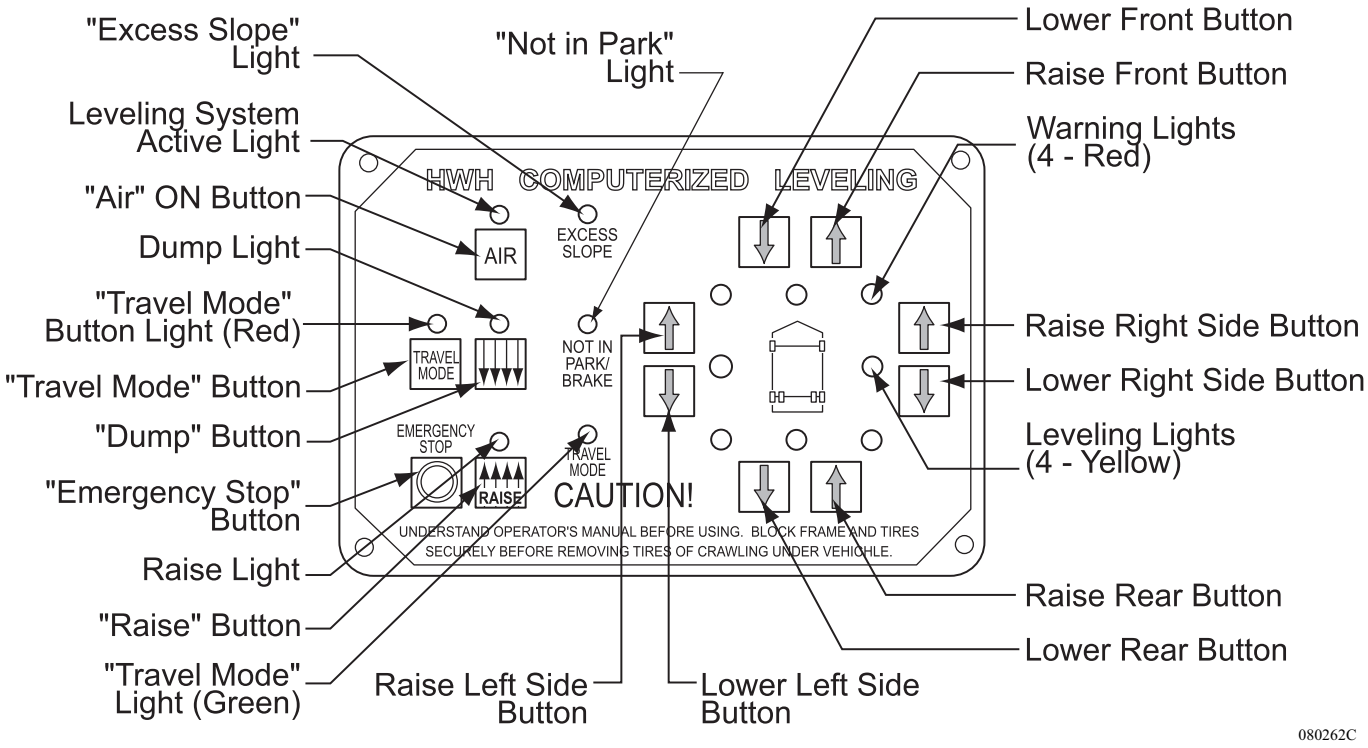

**Raise** = Pressing this button with ignition key in the on or accessory position will inflate the air springs using system air pressure.

**Excess Slope** = Indicates the system has attempted to level the motorhome but the surface the motorhome is parked on is too steep. Select another site.

**Not in Park Brake** = Illuminates when the park brake is not set and the AIR button is being pressed.

**Up arrows** = These buttons are used for manual leveling. Press and hold an up arrow to raise the corresponding side or end of the coach.

**Down arrows** = These buttons are used for manual leveling. Press and hold a down arrow to lower the corresponding side or end of the coach.

**Panel Indicator Lamps:**
**Yellow Level Indicator Lamps** = Illuminated lamp indicates that side, end or corner of the coach is low. The coach is level when all the yellow level lights are out.
**Red Warning Indicator Lamps** = Illuminate when system is set to manual or automatic level mode. Indicates the height control valves (HCV) will not operate.

**Master Warning Lamp:**
The master warning lamp will illuminate for several reasons if the ignition is in the **ON** or **OFF** position.

- When system pressure is below 80 psi.
- When any air bag pressure is below 20 psi.
- When the ignition is on and the system is not in the travel mode.
- When manual or automatic leveling mode is activated.
- When the tag axle (if equipped) is raised. The system will not allow manual or automatic leveling when the tag axle is raised.
- If the reset button is illuminated.
- If the lamp remains lit, check the above items. In some cases, it may be necessary to set the system to back to travel mode by pressing the Travel Mode button or releasing the park brake.

**Reset Button:**

Should the reset button illuminate; it is an indication an error has occurred in the system. Press the button to reset the system. This will turn the panel off. Accidentally pressing the reset button in some modes can cause the Master Warning lamp or Reset Button to illuminate. Press the Emergency Stop button then set the system to Travel Mode. If the lamp remains illuminated, it indicates a fault in the system that may be a blown fuse in the control center. If the lamp remains lit after checking all related fuses, the system will need to be diagnosed by a technician.

**CAUTION: If the reset light is illuminated, the coach will return to ride height if the ignition is in the on position**

**Automatic Leveling**

When set to auto-level mode, the system will attempt to level to the lowest point first. Example: if the rear of the motorhome is low, the yellow level indicator located at the rear of the motorhome icon will be illuminated. The system will dump air from the front air springs until the motorhome is level. If the front air springs fully deflate before the yellow lamp goes out (indicating level), the system will raise the rear of the motorhome until the yellow lamp goes out. If two yellow indicator lamps are illuminated, one on the side and one on the end, the system will level side-to-side first, then end-to-end.

**NOTE: The leveling system will perform best if there is no movement in the motorhome while the system is attempting to auto-level.**

**CAUTION: Several inches of unobstructed downward travel is required when using the leveling system. Look underneath the motorhome for any obstacles that could damage undercarriage components before using the leveling system. Do not move the motorhome when the leveling system is set to manual or automatic leveling mode. Suspension and body damage may result.**

**WARNING: Never engage the leveling system when anybody is located near or underneath the motorhome. Serious injury or death can occur.**

**Automatic Leveling Procedure:**

- Set the parking brake and start the engine. The ignition must be on to operate the leveling system. Ensure the front wheels are pointing straight ahead. Allow the air system to build to full air pressure, approximately 130 psi. The leveling system operates more efficiently using the high-idle feature.
- Press the AIR button once to turn the leveling system on. The Air indicator light and four red warning lights will glow steady.
- Press the AIR button a second time. The Air indicator light will start flashing and automatic leveling will begin. The system will level only when a yellow side or end light illuminates.
- When all yellow lights are out, the leveling process is complete. The Air indicator light will be flickering. The engine may now be turned off.

The Air indicator light will initially flicker for about ten minutes. After ten minutes, the Air indicator light will go out. The system is in "sleep" mode. The system will awaken at approximately 30-minute intervals to check the level sensing inputs. If the system detects a continuous off-level condition from a sensing input for one minute, the system will try to lower the opposite end/side in an attempt to level the motorhome. If the end/side is at its lowest point of travel, the system compressor will activate to inflate the air spring at the low end/corner and level the motorhome. This process will continue until Emergency Stop is pressed or the parking brake is released with the ignition in the on position.

**NOTE: If the system is turned off, the processor will not make any adjustments and an off level condition may occur over time.**

**Excess Slope:**

After approximately 15 to 18 minutes if the system was unable to level motorhome, one or two yellow Level indicator lights will remain on and the Excess Slope light will illuminate. The system will remain on but will not go into Sleep Mode. It is recommended to select another site.

**Preparation for Travel:**

- Follow the procedures listed for "Retracting the Slide-out Rooms" in Section 5.
- Start the engine and allow the air system to fully pressurize (approximately 130 psi).
- Press the Travel Mode button or release the parking brake. The leveling system will turn off automatically. Before travel, the Master Waning lamp must be off and the Travel indicator light must be on. After the leveling system is set to travel mode, it takes about one minute for the suspension system to have sufficient air for travel. DO **NOT** solely rely upon the warning lights to indicate the motorhome suspension is ready for travel.

**System Air Compressor:**

A small air compressor provides the leveling system with air pressure should system air pressure drop below approximately 90 psi when in auto-level mode.

**Manual Air Leveling Operation:**

- Set the parking brake and start the engine. Ensure the front wheels are pointing straight ahead. Allow the air system to build to full air pressure, approximately 130 psi. The leveling system operates more efficiently using the high-idle feature.
- Press the AIR button once to turn the leveling system on. The Air indicator light and four red warning lights will glow steady.
- Pressing the individual Raise or Lower buttons (UP or DOWN arrows) will raise or lower the position indicated in relation to the motorhome icon.
- A yellow light indicates the side, end or corner of the motorhome is low. Lower the opposite side or end of motorhome to achieve level. If a level position cannot be achieved by lowering, then raise the motorhome according to light yellow lights.
- Turn the ignition and control panel off.
- The system will not be in the sleep mode if the coach was leveled in the manual level mode.

**NOTE: Level the motorhome side-to-side before leveling the motorhome front to rear.**

**Dump Button:**

With the engine running, press and hold the Dump button. The system will release air from the air springs lowering the suspension. When the button is released, the suspension will slowly return to normal ride height.

With the engine off, press and hold the Dump button to release all air from the air springs lowering the suspension. Only air in the air springs is released. The air system will remain charged.

**CAUTION: Never lower the suspension and attempt to travel or turn. Body and suspension damage will result.**

**Raise Button:**

With the engine running and the system at full air pressure, press and hold the Raise button. The system will add air to the springs raising the suspension. When the button is released, the suspension will slowly return to normal ride height.

**NOTE: The motorhome will raise approximately 4". This is helpful when negotiating driveways.**

**CAUTION: Do not rely solely upon the travel light. It is the operator's responsibility to make sure the air suspension system is ready for travel.**

**Manual Air Leveling Operation:**

- Set the parking brake and start the engine. Ensure the front wheels are pointing straight ahead. Allow the air system to build to full air pressure, approximately 130 psi. The leveling system operates more efficiently using the high-idle feature.
- Press the AIR button once to turn the leveling system on. The Air indicator light and four red warning lights will glow steady.
- Pressing the individual Raise or Lower buttons (UP or DOWN arrows) will raise or lower the position indicated in relation to the motorhome icon
- A yellow light indicates the side or end of the motorhome is low. Lower the opposite side or end of motorhome to achieve level. If a level position cannot be achieved by lowering, then raise the motorhome according to light yellow lights.
- Turn the ignition and control panel off.

**NOTE: Level the motorhome side-to-side before leveling the motorhome front to rear.**

**Dump Button:**

With the engine running, press and hold the Dump button. The system will release air from the air springs lowering the suspension. When the button is released, the suspension will slowly return to normal ride height.

With the engine off, press and hold the Dump button to release all air from the air springs lowering the suspension. Only air in the air springs is released. The air system will remain charged.

**CAUTION: Never lower the suspension and attempt to travel or turn. Body and suspension damage will result.**

**Raise Button:**

With the engine running and the system at full air pressure, press and hold the Raise button. The system will add air to the springs raising the suspension. When the button is released, the suspension will slowly return to normal ride height.

**NOTE: The motorhome will raise approximately 4". This is helpful when negotiating driveways.**

**CAUTION: Do not rely solely upon the travel light. It is the operator's responsibility to make sure the air suspension system is ready for travel.**

The diesel engine operates differently from the conventional gasoline engine. Gasoline engines control engine speed using a butterfly throttle plate controlling air/fuel mixture inlet flow. As the throttle plate opens, vacuum created by the piston velocity draws the metered fuel/air charge into the combustion chamber, then ignites from a controlled electric ignition source. Closing the throttle plate limits the fuel/air supply, slowing engine speed, increasing intake manifold vacuum.

The diesel engine in the motorhome controls engine speed by varying fuel supply only. No throttle plates are used. An exhaust driven turbine system (turbocharger) compresses the fresh air supply into the engine. The fuel is injected under pressure into the combustion chamber. Ignition of fuel/air charge occurs from heat generated by rapid high compression. The turbo boost gauge registers amount of intake manifold pressure measured in lbs./in$^2$. Therefore, no intake manifold vacuum exists.

Diesel engine RPM (revolutions per minute) operating speeds are generally much lower than that of the gasoline engine. Peak torque and horsepower output values occur at much lower engine speeds. Idle speeds between the two engine types are similar, however maximum engine speeds are quite different. The gasoline engine generally is not regulated to a maximum engine speed. The maximum engine speed on a diesel engine is controlled by an engine speed governor set by the engine manufacturer.

**WARNING: Do not operate a diesel engine where there are or can be combustible vapors. Vapors can be drawn through the air intake system and cause engine acceleration and over-speeding, resulting in fire, explosion and extensive property damage. Numerous safety devices are available, such as air intake shutoff devices, to minimize risk of an engine over-speeding where an engine (due to its application) might operate in a combustible environment, such as fuel spills or gas leaks.**

**INFORMATION: The equipment owner and operator is responsible for safe operation of engine. Consult your engine manufacturers owners manual or authorized repair location for more information.**

## ENGINE DIAGRAM -
***Detroit Diesel***
***(Optional)***

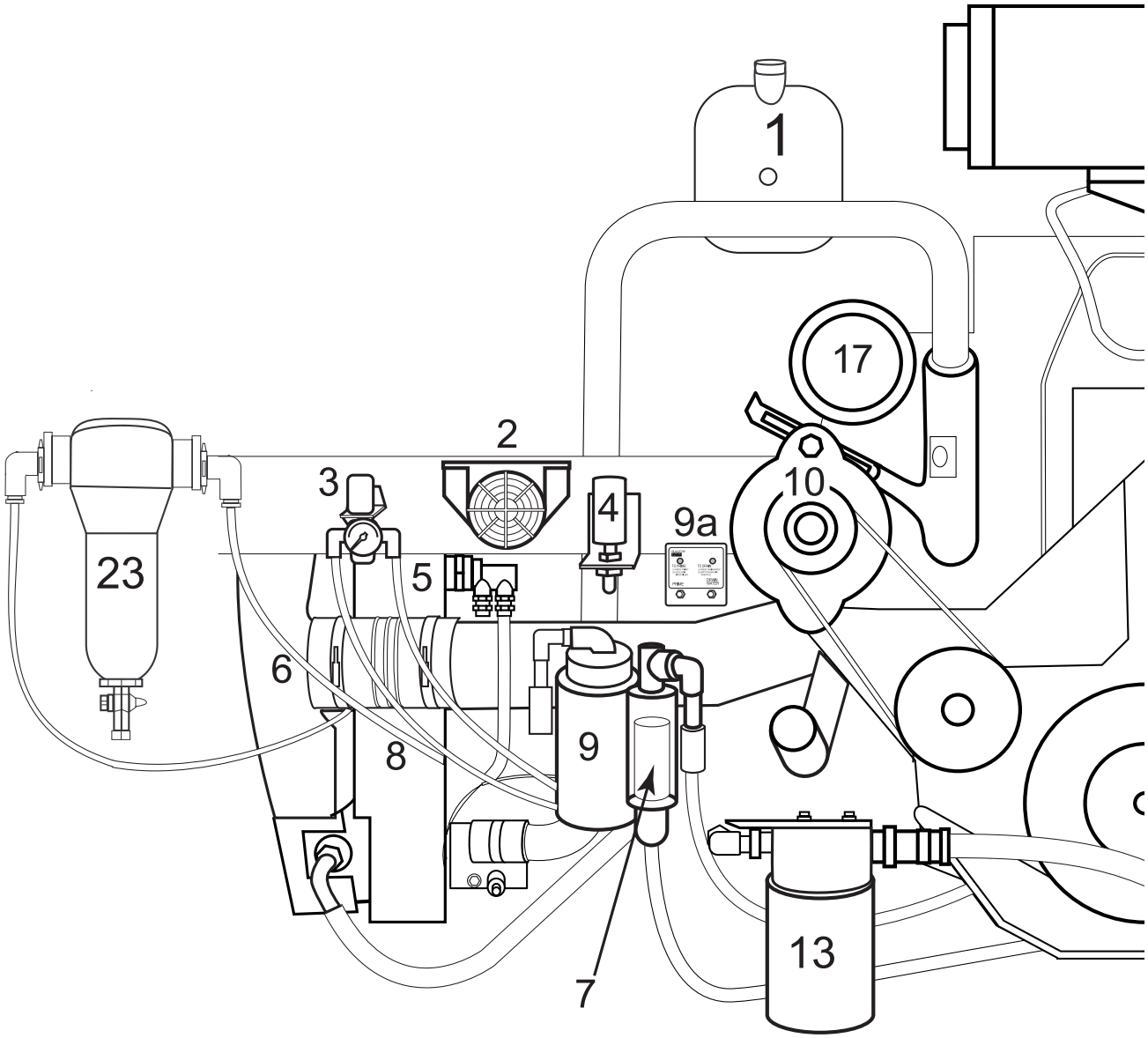


**Engine Call out Data:**
1. Coolant Reservoir
2. Back-up Alarm
3. Tag Axle Regulator
4. Air Filter Minder
5. Thermovalve (for hydraulic fans)
6. Charge Air Cooler
7.Prestrainer: Diesel Fuel
8. Radiator
9. Primary Fuel Filter
9a. Fuel Control Panel
10. Alternator
11. Engine Oil Dipstick
12. Engine Oil Fill Tube

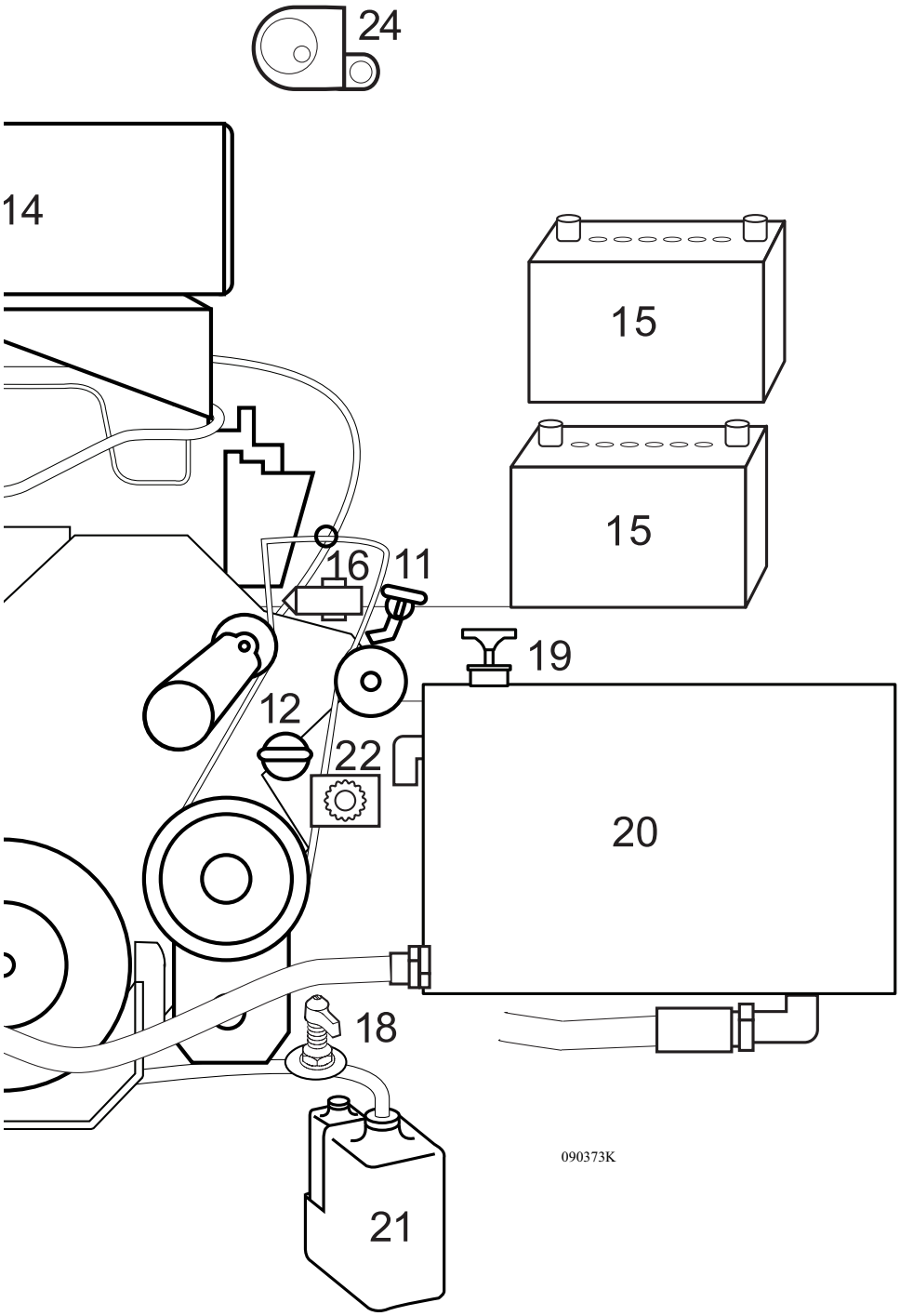


13. Hydraulic Oil Filter
14. Air Filter
15. Chassis Batteries
16. Air Governor
17. Air Conditioning Compressor
18. Chassis Batteries Disconnect
19. Hydraulic Oil Dipstick
20. Hydraulic Oil Reservoir
21. $H^2O$ Purge Overflow Bottle
22. Engine Diagnostic Plug
23. EGR Filter
24. Light Reel - 12 Volt

## *Cummins - I.S.M*

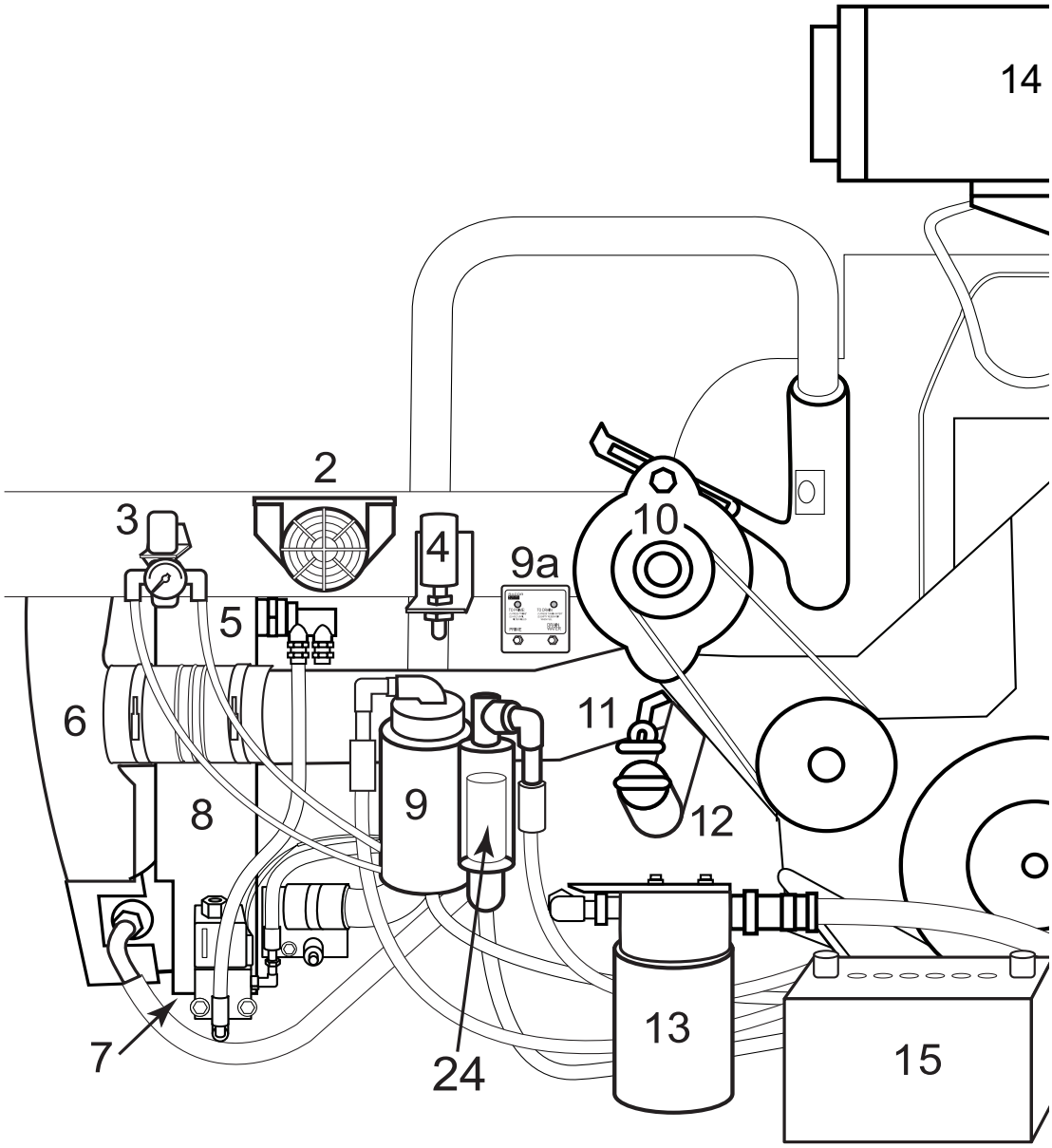


**Engine Call out Data:**

1. Coolant Reservoir
2. Back-up Alarm
3. Tag Axle Regulator
4. Air Filter Minder
5. Thermovalve (for hydraulic fans)
6. Charge Air Cooler
7. Electric Override Valve (for hydraulic fans)
8. Radiator
9. Primary Fuel Filter

9a. Fuel Control Panel

10. Alternator
11. Engine Oil Dipstick
12. Engine Oil Fill Tube

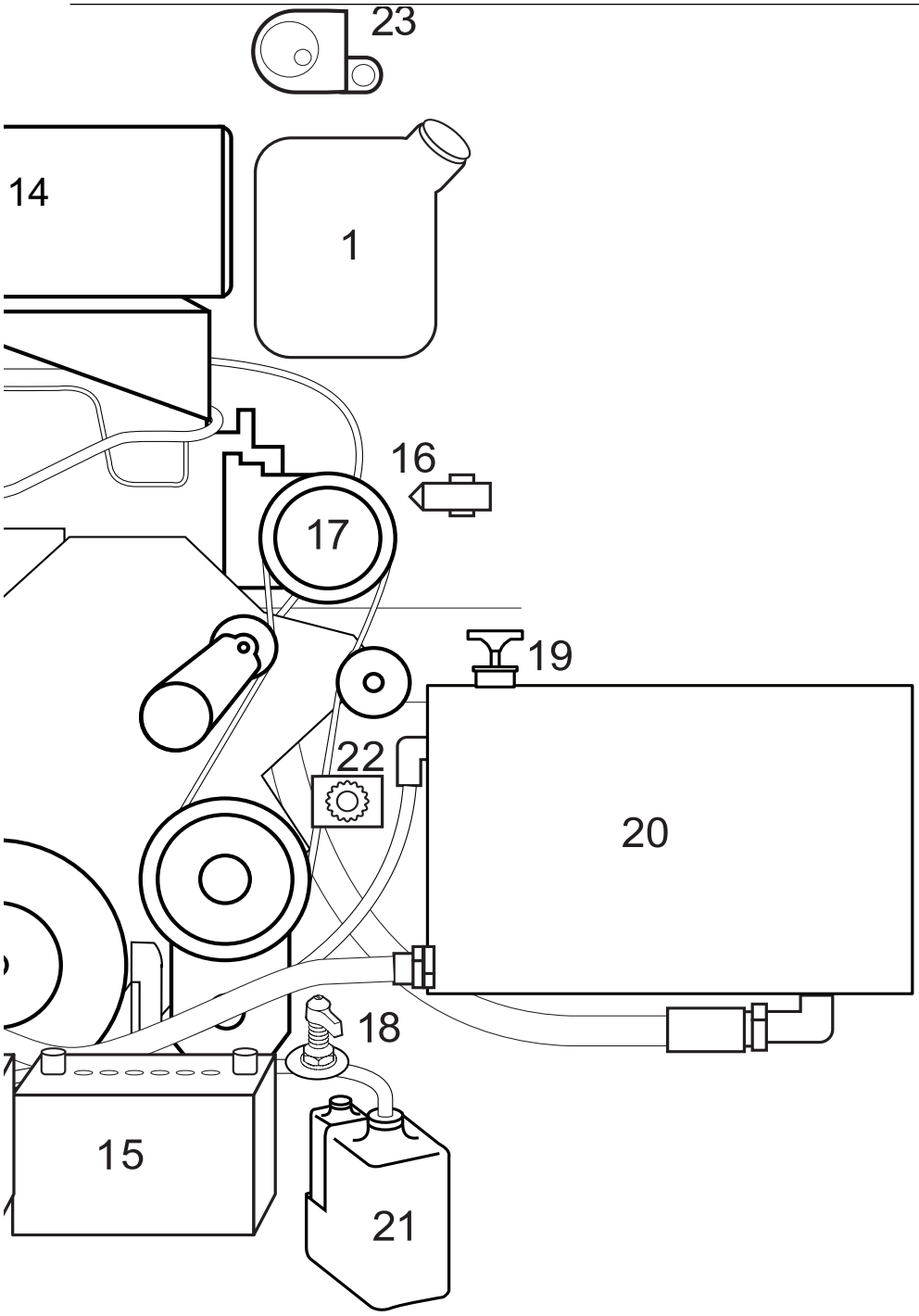


13. Hydraulic Oil Filter
14. Air Filter
15. Chassis Batteries
16. Air Governor
17. Air Conditioning Compressor
18. Chassis Batteries Disconnect
19. Hydraulic Oil Dipstick
20. Hydraulic Oil Reservoir
21. $H^2O$ Purge Overflow Bottle
22. Engine Diagnostic Plug
23. Light Reel - 12 Volt.
24. Pre strainer = Diesel fuel

## STARTING PROCEDURE - *Normal Starting*

With the foot throttle in the idle position, turn the key to the start position. When the engine has started release the key. Allow the engine to idle with no load for three to five minutes. The engine coolant temperature should be up to normal operating range (140º F / 60º C to 212º F / 100º C) before operating the engine under full throttle.

**NOTE: The engine does not have a "wait to start" feature.**

### *Cold Weather Starting*

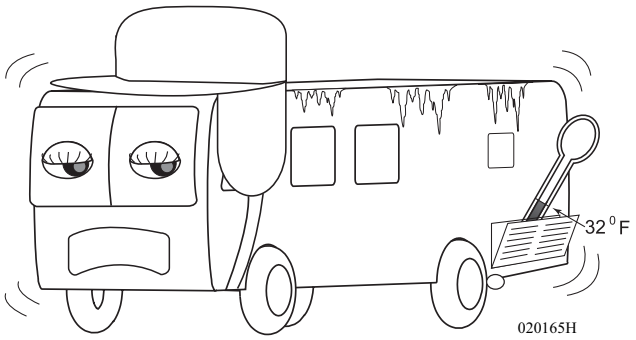


In sub-freezing or extreme cold, engine oil becomes thick and battery output is reduced. Thick oil, combined with less amperage available from the battery, increases difficulty in starting the engine.

Depending on ambient temperature it may be necessary to pre-heat the engine. Located in the coolant passage in the engine is a heating unit that operates from 120 Volt AC. If it is necessary to pre-heat the engine due to ambient temperature, it is recommended to activate the block heater the night before, allowing several hours for the block heater to warm the engine.

Another method to preheat the engine is to use the Aqua-Hot. The Aqua-Hot engine heat function will heat engine coolant and heat the interior. An indication of 100º F or higher of the engine temperature gauge should be sufficient for the engine to start.

**NOTE: The engine is filled with 15-40w multi-viscosity oil from the factory. Generally this will start the engine in temperature down to 15º F. If the engine has normalized to a temperature below 15º F it will be necessary to pre-heat the engine before starting.**

**CAUTION: Upon cranking an engine in cold temperature, the starter may rapidly engage and disengage. If this occurs STOP attempting to crank the engine as starter damage may occur. Pre-heat the engine before making any more attempts to start the engine.**

**Block Heat:**

The switch labeled **Block Heat** operates the receptacle for the block heater cord. The block heater, depending on engine size, is rated between 850 and 1500 watts. For efficiency hook to shore power, because more than likely it will be difficult to start the generator. An auxiliary method is to plug the block heater cord to a separate power cord, as long as the power cord is rated for 15 Amps and the outlet used must be GFCI protected rated at 20 Amps. The engine may require several hours of pre-heating before it will start. It is recommended to start pre-heating the engine the night before departure. Remember to turn **OFF** the Block Heater switch or unplug the separate power cord.

**To Use the Block Heater:**

- Hook to shore power and plug in block heater cord to the receptacle.
- Turn on the Block Heat switch.

**Engine Heat:**

The diesel burner inside the Aqua-Hot heats an internal engine coolant loop. When the Engine Heat switch is turned on, an engine coolant pump inside the Aqua-hot circulates heated coolant through the engine. The time it takes for the Aqua-Hot to pre-heat the engine depends on ambient temperature. Allow at least three hours of pre-heating before attempting to start the engine.

**To Use the System:**

- Turn the Aqua-Hot switch to the **ON** position.
- Turn the Engine Heat switch to the **ON** position. This activates the engine pump inside the Aqua-Hot.

**Tips:**

1. When operating below 32º F, an engine block heater or other means to warm the engine can enhance engine starting. This will ease cranking and help prevent engine misfiring and white smoke during starting.
2. Always follow the recommended oil, fuel, and coolant specifications as outlined in the OEM Engine Manual. Proper oil viscosity and coolant concentration eases engine starting and helps to avoid engine damage.
3. Allow the engine to idle until it warms sufficiently for operation. Utilize the fast idle feature to quicken the process. Wait to operate the vehicle for at least three minutes or until the coolant temperature begins to move.
4. Check the air inlet and filter daily, or as necessary, when driving in snow conditions.
5. The demand on batteries increase during winter; check and service the batteries frequently to help ensure trouble-free starts.
6. Start out slowly with the motorhome to allow the transmission and axle lubricants time to circulate and warm before putting them under full load.

**WARNING: Do not use ether cold starting aids to start the engine as damage may occur.**

## ENGINE OIL - *Cummins Engine Requirements*

The maintenance guidelines in the Cummins Operation & Maintenance Manual are the recommendations for the engine to extend the engine life and improve performance, resulting in cost efficient operations. A good maintenance schedule begins with a daily awareness of the engine and its various systems.

A high grade 15W-40 multiviscosity heavy duty lubricating oil meeting Cummins Engineering Specification CES 20071 or CES 20076, American Petroleum Institute (API) specification CH-4 which can be used as an alternative to CES 20071 is recommended. Lubricating oils meeting API CG-4 specifications may be used at a reduced drain interval. The engine uses Pennzoil 15W-40 heavy duty engine lubricating oil that meets Cummins specifications. A critical factor in maintaining engine performance and durability is the use of high grade multigrade lubricating oil and strict adherence to the maintenance service intervals.

A straight weight or monograde lubricating oil is not recommended. Shortened drain intervals may be required as determined by a close monitoring of the lubricating oil condition by means of an oil sampling program. The use of oil analysis to extend drain interval is not recommended. There are numerous variables which is the basis of the recommendation.

Synthetic oils API category III specifications are recommended for extreme cold temperatures only. Low viscosity oils, used for winter operations, will aid in starting. Synthetic oils, or oil with adequate low temperature properties used for Arctic operations where the engine cannot be kept warm when shut down, will aid in starting. The use of synthetic oils should not be used to extend drain intervals. Extended oil change intervals can decrease engine life and possibly affect the engine warranty.

Oil additives should not be used unless the oil supplier or oil manufacturer has been consulted and provided positive evidence or data establishing satisfactory performance in the engine.

**NOTE: The engine does not require a “break-in” procedure.**

## Detroit Engine Requirements

The maintenance guidelines in the Detroit Diesel Engine Operators Guide are the recommendations for the engine to extend the engine life and improve performance, resulting in cost efficient operations. A good maintenance schedule begins with a daily awareness of the engine and its various systems.

A high grade 15W-40 multiviscosity heavy duty lubricating oil meeting Detroit Diesel requirements, American Petroleum Institute (API) specification CI-4 is recommended for EGR equipped Engines. Lubricating oils meeting API CI-4 or CH-4 may be used in engines without EGR system. A critical factor in maintaining engine performance and durability is the use of high grade multigrade lubricating oil and strict adherence to the maintenance service intervals. At temperatures below -20F 5W-XX and 10W-XX oils may be used provided they are API CI-4 rated for EGR equipped engines. Low viscosity oils, used for winter operations, will aid in starting.

**Caution: Do not use a straight weight or monograde lubricating oil is not recommended.**

**Caution: Do not use oil analysis to extend drain intervals.**

Synthetic oils may be used in Detroit Diesel engines provided they are API licensed and meet the performance and chemical requirements of non-synthetic oils outlined in the Detroit Diesel Engine Operators Guide. Synthetic oils can improve low temperature flow properties and high temperature oxidation resistance. Synthetic oils, or oil with adequate low temperature properties used for Arctic operations where the engine cannot be kept warm when shut down, will aid in starting. The use of synthetic oils should not be used to extend drain intervals. Extended oil change intervals can decrease engine life and possibly affect the engine warranty.

Oil additives should not be used in the Detroit Diesel engines. Lubricants meeting the Detroit Diesel specifications outlined in the Operators Guide contain a balanced additive treatment. Supplemental additives are generally not necessary and can be harmful.

**NOTE: Engine damage resulting in the use of supplemental oil additives is not covered by Detroit Diesel Corporation warranty.**

**NOTE: The engine does not require a "break-in" procedure.**

**Function of Engine Oil:**

If a lubricating oil is to work in an engine it must be capable of performing various functions. Lubrication of the moving parts is the primary function. The lubricating oil should be able to form a film between metal surfaces preventing metal to metal contact and reducing friction. When there is a metal to metal contact, friction heat is generated. Welding of the part can occur and metal transfer will result in scuffing or seizing. The film of oil contacting the surfaces will provide cushioning and shock dampening as well.

Cleaning is another function. The oil should perform as a cleaner in the engine by flushing contaminates from critical components. These contaminates should be removed in the filtration system or during the course of an oil change. Oil will provide a protective barrier to prevent corrosion of non-like metals.

Internal components of the engine require cooling. The primary coolant system cannot provide this cooling. Oil will transfer heat by contacting the various components then transferring to the primary cooling system at the oil cooler.

The uneven surfaces in the combustion chamber are filled to act as a combustion seal within the cylinder liner and other internal components.

**Synthetic Engine Oil:**

In extreme environments, where ambient temperatures can be as low as 45º C (-50º F), a petroleum based oil will not perform satisfactorily in diesel engines. Synthetic oils were developed for these type applications. These synthetic oils are blend from ether and/or hydrocarbon based oils. These base oils are produced by chemically reacting lower molecular weight materials to manufacture lubricants of desired properties. All synthetic based oils must meet the API category III classifications and SAE viscosity grades of the engine manufacturer.

**NOTE: Synthetic oils and petroleum based oils should never be mixed.**

**Viscosity:**

Viscosity is simply a measure of resistance of molecule layers moving relative to an adjacent layer. All fluid viscosity is affected by temperature. A multigrade lubricating oil tends to be less sensitive to temperature changes due to formulation. Lubricating oils are generally selected for use with viscosities appropriate for the expected operating temperature. The correct selection of a lubricating oil of correct viscosity is critical for optimum performance. Some effects of incorrect viscosity when the oil is too thick range from difficulty in starting, to increasing fuel consumption and reduced power output. When the oil is too thin, oil consumption is increased as well as wear from the metal to metal contact. This will also increase engine noise.

Low temperature viscosity specifications are identified by a "**W**" (winter). High temperature viscosity that meets the 100º C (212º F) requirements have no suffix. When a lubricating oil meets both high and low temperature requirements they are-classified as multi-viscosity or multigrade.

**Oil Maintenance Schedule:**

1. Check oil level daily.
2. Replace oil filter at every oil drain interval.
3. Cummins Engine Company, Inc. recommends the use of high quality, API (American Petroleum Institute) licensed CH-4 or CES20071, 15W-40, multiviscosity oil or premium oil.
4. Detroit Diesel Recommends API Licensed CI-4 15w-40 multi viscosity premium oil.
5. The recommended oil drain interval is defined by the API oil performance classification and the engine duty cycle.

**INFORMATION: Refer to the *Engine Manufacturers* Owner's Manual for complete details.**

To change oil start with the motorhome at normal operating temperature. Park on a level surface and stop the engine. Remove the crankcase drain plug to allow the oil to drain. Install the drain plug back into the oil pan and tighten to 35 ft-lbs. Remove the oil filter(s).

**NOTE: It is recommended that the used oil filter be opened and the element examined for excessive wear particles.**

Wipe the filter base sealing surface and ensure that the old gasket is removed. Apply clean engine oil to the gasket of the new filter and install the filter until the gasket contacts the filter base. Tighten the filter an additional ¾ turn. Do not over-tighten. Remove the oil filler cap. Fill the crankcase with the amount of oil determined by dipstick readings (about 36 quarts).

Allow time for the oil to drain into the sump and start the engine. Observe the engine for proper oil pressure. Run the engine at low idle for three minutes while observing engine and filter for leaks. Stop the engine and allow the oil to settle for five minutes. Check the level of the engine oil with the dipstick. Correct the level as necessary.

- Recommended oil drain interval is defined by the API oil performance classification and the engine duty cycle.

**INFORMATION: Refer to the *Manufacturers Owner's* Manual for complete details.**

### *Cold Weather - Oil*

It is possible to operate diesel engines in extremely cold environments. The engine should be properly prepared and maintained. The correct lubricants, fuels and coolant MUST be used for the cold weather range for which the motorhome is being operated. Cold weather operation can be defined in two categories: Winter and Arctic.

**WINTER (32º to -25º F) (0º to -32º C):** Use a 50% antifreeze to 50% water coolant mixture, use multi-viscosity oil meeting manufacturers specifications and fuel to have maximum cloud pour points 10º F (6º C) lower than the ambient temperature in which the motorhome operates.

**ARCTIC (-25º to -65º F) (-32º to -52º C):** Use a 60% antifreeze to 40% water coolant mixture. Use oil meeting manufacturers specifications and fuel to have maximum cloud pour points 10º F (6º C) lower than the ambient temperature in which the motorhome operates.

**INFORMATION: Refer to the manufacturers Owner's Manual for more detailed information.**

## COLD WEATHER STARTING - *Detroit*

At ambient temperatures below -4ºf F the use of 5W-XX and 10W-XX, where XX is 30 or 40, will improve the starters ability to turn the Engine fast enough to start. This is allowed, provided they are API CI-4, have demonstrated field performance in DDC engines and possess an HT/HS of 3.7 minimum.

The DDEC engine is equipped with an electronically controlled fuel injection system. This system helps reduce cold starting time and increase initial idle speed for fast engine warm-up. DDEC III improves cold starting by sensing oil, coolant and air temperatures and adjusting the injection and timing automatically. This lets the Series 60 start at 20 to 25 degrees lower outside temperature than a mechanically governed engine. At high elevations and cold temperatures, the engine may require a couple of 15 second cranking periods before the cylinders start firing.

**NOTE: The starter requires a 15 second rest period for every 15 second cranking period.**

**NOTE: Winter Fronts should only be used when ambient temperature remains below 10º F and should never cover more than ¾ of the grille while driving.**

**NOTE: The engine may require the use of a cold weather starting aid if the ambient temperature is below 40º F.**

**Cold Weather Operating Aids**

| Temperature | Starting Aid | Coolant Heater | Oil Heater | Under-Hood Heater | Fuel Heater | Battery Heater | Radiator Shutters | Engine Enclosure | Winter Front | Thermatic Fan |
|---|---|---|---|---|---|---|---|---|---|---|
| 50 to 32 F / 10 to 0 C | | | | | | | | | | |
| 32 to -10 F / 0 to -32 C | Required | Required | Required | Required | Required | Required | Required | Required | Required | Required |
| -10 to -25 F / -23 to -32 C | Required | Required | Required * | Required | Required * | Required | Required | Required | Required | Required |
| -25 to -65 F / -32 to -54 C | Required | Required | Required | Required | Required | Required | Required | Required | Required | Required |

* Required dependant upon viscosity/pour point

Coldopaidschart01.eps

10

## ENGINE SHUTDOWN

General guidelines for shutting the engine down are fairly simplistic. Allow the engine to idle three to five minutes after a full load operation. This allows adequate cool down of pistons, cylinders, bearings and turbocharger components. Under normal driving conditions, exiting the highway is generally lighter engine operation and the need for the three to five minutes is not necessary.

### *Extended Engine Shutdown*

When the motorhome has been sitting for extended periods, 30 days or more, verify all the fluid levels are correct. Follow the normal starting procedures. If the oil pressure gauge does not register within 15 seconds, shut off the engine immediately to avoid damage. Consult the Manufacturers Owner's Manual for guidelines on troubleshooting low oil pressure, or contact a qualified service technician. Allow the engine to idle for five minutes before operating under a load.

## COOLANT

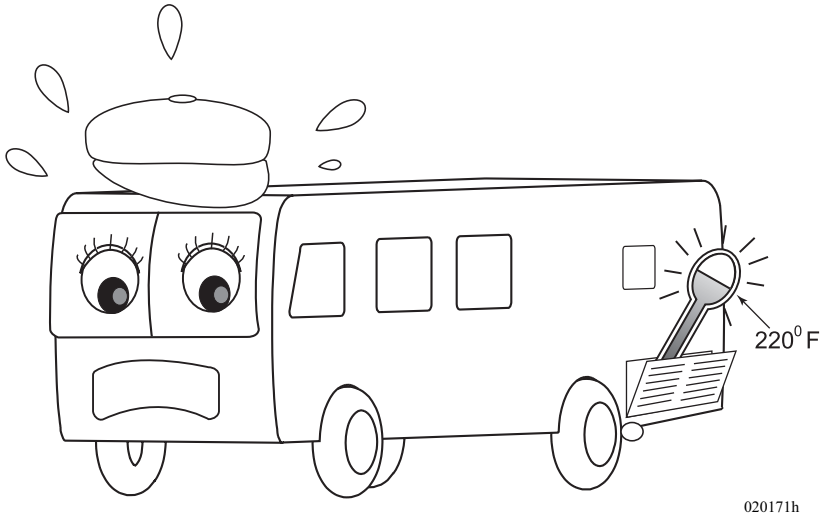


A fully formulated antifreeze or coolant containing a precharge of Supplemental Coolant Additives (SCA) is recommended to significantly simplify coolant system maintenance. The difference between a fully formatted antifreeze and a fully formatted coolant is the percentage of water. Both contain balance amounts of antifreeze, SCA, buffering compounds and a percentage of good clean quality water. The antifreeze of coolant must meet ethylene glycol or propylene glyco recommendations.

A good clean quality water in a 50/50 ratio (40 to 60% working range) mixed with fully formatted antifreeze will provide protection from -34º F to 228º F. The 50/50 mix ratio must be premixed prior to being put in the system. Placing antifreeze and water in the cooling system is not recommended. Consult the manufacturers Owner's Manual for more details.

**NOTE: An over concentration of antifreeze, or the use of high silicate antifreeze, can cause damage to the coolant system and engine. Antifreeze is essential in every climate.**

**WARNING: Do not continue engine operation when engine temperature rises above 220º F. At 220º an engine warning light will illuminate and the engine will begin to de-rate in power output. Continued operation will result in engine damage.**

**Cummins Engine:**

The coolant level and fluid freeze point should be checked with every oil change interval, at 15,000 miles, 500 hours or six months, whichever comes first. Also change the coolant filter at the same interval unless SCA concentration is over three units. The coolant should be drained and flushed at 6,000 hours or two years of service, whichever comes first.

**Detroit Diesel Engine (Series 60):**

The coolant level and fluid freeze point should be checked with every oil change interval, 15,000 miles. Proper maintenance includes using Power Trac 3-way test strips and the addition of SCA, as indicated by the test strip. With proper maintenance coolant can be operated 2 years, 300,000 miles, or 4,000 hours, whichever comes first.

**NOTE: Consult the engine manufacturers owners guide for more detailed information.**

**Engine Coolant Reservoir (Cummins):**

The engine coolant reservoir is connected to the radiator by a hose. When the motorhome is driven, coolant heats and expands. A portion of fluid displaced by expansion flows from the radiator into the reservoir tank. When the engine is stopped, the coolant cools and contracts. Coolant is drawn back in the radiator by a vacuum. Thus, the radiator is kept filled with coolant to the desired level at all times resulting in increased cooling efficiency. The coolant level should be at, or slightly above, the appropriate mark on the reservoir tank when the system is cold.

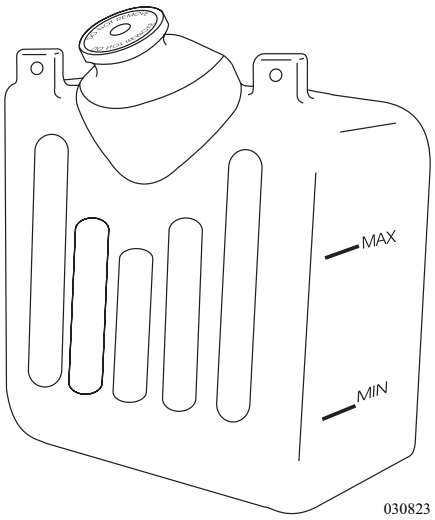

*Cummins Engine Coolant Reservoir*

**CAUTION: To avoid scalding hot steam or coolant from being released from the engine cooling system, never remove the reservoir cap while the engine is running or hot. Failure to follow this warning may result in damage to the engine's cooling system and possibly cause severe personal injury.**

- Check the coolant level daily or when refueling.
- Drain and flush the coolant system every 240,00 miles or two years, and refill with a heavy-duty coolant (50/50 mix of water and anti-freeze).
- If the coolant is below the MIN mark, the low coolant alarm will sound and the low coolant light will appear on the dash.
- The coolant level remains between the MAX and MIN level in the reservoir.

**INSPECT: Stop the motorhome and inspect the coolant level before continued operation.**

**Routine Maintenance Recommendations (Cummins):**

1. Check the SCA concentration level every 15,000 miles/6 months.
2. Change the coolant filter every 15,000 miles/6 months.
3. Drain and flush the system every 240,000 miles/2 years, and refill with a heavy-duty coolant (50/50 mix of water and antifreeze).
4. Always use antifreeze. In addition to freeze protection, antifreeze is essential for overheat and corrosion protection.
5. The supplemental coolant additive (SCA) is required.
6. Freeze point should be measured every 15,000 miles/6 months.

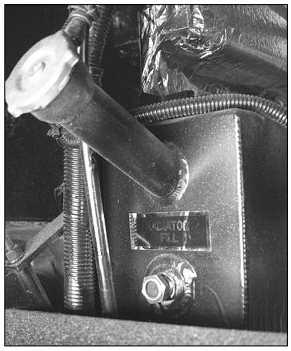

naudet12.tif

**Engine Coolant Reservoir (Detroit):**

The engine coolant reservoir is connected to the radiator by a hose. When the motorhome is driven, coolant heats and expands. A portion of fluid displaced by expansion flows from the radiator into the reservoir tank. When the engine is stopped, the coolant cools and contracts. Coolant is drawn back in the radiator by a vacuum. Thus, the radiator is kept filled with coolant to the desired level at all times resulting in increased cooling efficiency. The coolant level should be at the sight glass on the reservoir tank when the system is cold.

**CAUTION: To avoid scalding hot steam or coolant from being released from the engine cooling system, never remove the reservoir cap while the engine is running or hot. Failure to follow this warning may result in damage to the engine's cooling system and possibly cause severe personal injury.**

- Check the coolant level when refueling.
- Drain and flush the coolant system every 300,000 miles or two years, or 4000 hours, whichever comes first, and refill with a heavy-duty coolant (50/50 mix of water and anti-freeze) and SCA additives.
- If the coolant is below the minimum level, the low coolant alarm will sound and the low coolant light will appear on the dash.
- The coolant level in the reservoir is visible in sight glass as green.

**INSPECT: Stop the motorhome and inspect the coolant level before continued operation.**

**Routine Maintenance Recommendations (Detroit):**

1. Check the SCA concentration level every 15,000 miles
2. Change the coolant filter as indicated by test strip.
3. Drain and flush the system every 300,000 miles/2 years, 4000 hrs and refill with a heavy-duty coolant (50/50 mix of water and antifreeze).
4. Always use antifreeze. In addition to freeze protection, antifreeze is essential for overheat and corrosion protection.
5. The supplemental coolant additive (SCA) is required.
6. Freeze point should be measured every 15,000 miles.

## Coolant Additives - SCA (Cummins)

Fully formulated products contain SCA and are required to protect the cooling system from fouling, solder blooming and general corrosion. The coolant filter is required to protect the coolant system from abrasive materials, debris and precipitated coolant additives.

Supplement coolant additives, or equivalent, are used to prevent cylinder liner pitting, corrosion and scale deposits in the cooling system. Use the correct Fleetguard coolant filter to maintain the recommended SCA concentration in the system. Maintain the correct concentration by changing the service filter at each oil drain interval.

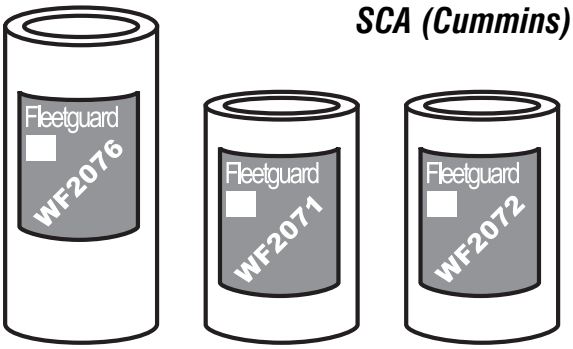


090331

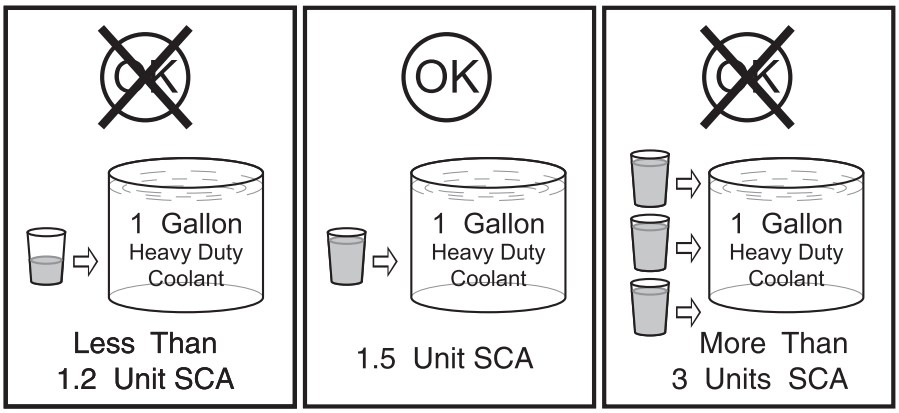


090331

**NOTE: The correct filter is determined by the total cooling system capacity and oil drain interval. Refer to the Coolant Capacity Specifications in this section.**

**CAUTION: Insufficient concentration of the coolant additives will result in cylinder liner pitting and engine failure. The SCA concentration must not fall below 1.2 units or exceed 3 units per gallon of cooling system capacity.**

Use the correct Fleetguard coolant filter to maintain the recommended SCA concentration in the system. Maintain the correct concentration by changing the service coolant filter at each oil drain interval. The oil pressure gauge, temperature gauge, warning lamps and other safety lamps should be checked daily to ensure proper operations.

**NOTE: The correct filter is determined by the total cooling system capacity. Refer to the *Cummins* manual for additional information.**

## Coolant Additives - SCA (DDC Series 60)

Powercoolfilter.tif

*Coolant Additive Filter. Power Cool by DDC 15 MOS/150,000 Mi/3000hrs/ PN23516489*

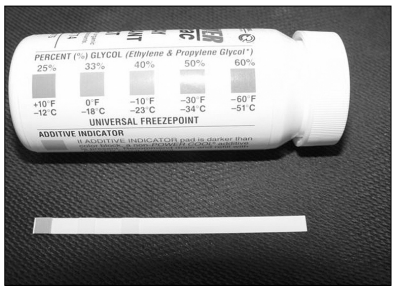


Powertracstrips3.tif

Fully formulated products contain SCA and are required to protect the cooling system from fouling, solder blooming and general corrosion. The coolant filter is required to protect the coolant system from abrasive materials, debris and recipitated coolant additives.

Supplement coolant additives, or equivalent, are used to prevent cylinder liner pitting, corrosion and scale deposits in the cooling system. Use the correct Power Cool coolant filter to maintain the recommended SCA concentration in the system. Maintain the correct concentration by changing the service filter and replacing filter according to test strip results, not to exceed filter life specs of 15 MOS, 150,000 Mi, 3000 hrs, whichever comes first.

| *Power Cool* 3000 Coolant Concentration Limits | |
|---|---|
| Boron | 125 - 500 PPM |
| Nitrite | 900 - 3200 PPM |
| Nitrate | 0 - 1000 PPM |
| Silicone | 50 - 250 PPM |
| Phosphorous | 0 PPM |
| pH | 8.0 - 11.0 |

**Table 27 Power Cool 3000 Concentration Limits (5% Power Cool 3000/ 95% Water)**

| | Maximum Allowable | |
|---|---|---|
| | Parts per Million | Grains per Gallon |
| Chlorides | 40 | 2.5 |
| Sulfates | 100 | 5.8 |
| Total Dissolved Solids | 340 | 20 |
| Total Hardness - Magnesium and Calcium | 170 | 10 |

**Table 28 Satisfactory Water Limits - Make-Up Water Only**

**NOTE: The correct filter is Power Cool by DDC PN23516489.**

**CAUTION: Insufficient concentration of the coolant additives will result in cylinder liner pitting and engine failure. The SCA concentration must not fall below or exceed the manufactuerers recommendations as determined by 3-way test strip check.**

Use the correct Power Cool coolant filter to maintain the recommended SCA concentration in the system. Maintain the correct concentration by changing the service coolant filter as indicated by the test strip result at every oil change. The oil pressure gauge, temperature gauge, warning lamps and other safety lamps should be checked daily to ensure proper operations.

**NOTE: The correct filter is determined by Detroit Diesel Corporation. Refer to the *Detroit Diesel Operators Guide* for additional information.**

When performing maintenance, it is also necessary to **inspect** other components of the cooling system.

Have an **inspection** performed of the surge tank cap seal and have the cap pressure tested, at each oil change. Replace the Thermostat,Gasket and Seal every 240,000 miles. The charge air cooler and radiator also requires an **inspection** for cracks, broken welds, secure mounting, and general cleanliness.

It may be necessary to clean the radiator and external coolers more often under certain conditions. Leaves, twigs, road debris and other contaminants can block the radiator and cooler fins resulting in reduced cooling system performance. Blockage can vary depending on road conditions, climate, and regional conditions. Check the radiator and external coolers weekly for any blockage and clean as required. To clean the radiator and external coolers, compressed air is recommended. In the event that road grime, oil, or inadequate cleaning with compressed air is encountered, a high pressure washer and degreaser may be used with caution, as excessive pressure can bend the radiator fins.

Please refer to the *Detroit Diesel Owners Guide* for detailed information regarding the 24 month/60,000 mile maintenance interval. This service includes draining the engine coolant, flushing/cleaning the cooling system, **inspecting** the water pump standpipe, replacing the thermostat, gasket and seal, and replacing the coolant and SCA element.

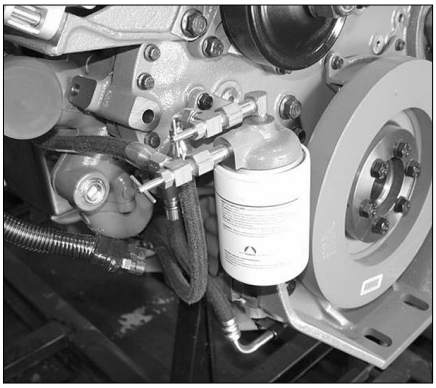

*Series 60 SCA Filter* Detsca3.tif

To replace the SCA element (located in the Engine Compartment of the motorhome), park the motorhome and stop the engine. Close both the inlet and outlet valves at the element mounting base. Remove the element from the base and discard properly. Clean the element base and ensure that the old gasket is removed.

Apply a thin film of clean engine oil to the new element gasket and install it onto the element head until the gasket contacts the base. Tighten the element an additional ¾ turn. Open the inlet and outlet valves. Remove the surge tank cap and run the engine until the coolant level stabilizes. Add premixed coolant/water to the system if necessary to bring the coolant to the proper level. **Inspect** the fill cap gasket and replace if damaged. Install the fill cap.

**Coolant Hoses:**

Rotten, swollen and worn hoses, as well as loose connections, are frequent causes of coolant system problems. Overheating can be caused by a collapsed hose or a clog caused by rubber shedding from a rotton hose. Replace any hose found to be cracked, swollen or damaged. Connections should be **inspected** periodically and hose clamps tightened.

**Every 12 months - Inspect** all hoses, clamps, and fittings for leaks due to cracking, softness, and loose clamps/fittings. Look for signs of fluid leaks, damaged end fittings, ballooning, chafed, kinked, or crushed hoses, and loose clamps and fittings. Correct any deficiencies found.

**Coolant Overheated:**

If the engine is overheated, never pour cold coolant into a hot engine. The sudden change in temperature may crack the cylinder head or block. If the engine is hot, fill slowly to prevent rapid cooling and distortion of engine castings.

**Coolant Changing:**

**24 months/60,000 miles - Inspect** and clean the cooling system and charge air systems to promote system cleanliness and to enhance engine cooling. Stop the engine and allow it to cool. Remove the cap from the surge tank and place a large container beneath the drain valve on the radiator. Open the drain valve and allow the cooling system to drain. With the drain valve open, flush the cooling system with clean water to remove debris. Dispose of the old coolant mixture appropriately. Close the drain valve and fill the cooling system with a mixture of clean water and sodium carbonate. One pound of sodium carbonate is needed for every six gallons of water. Operate the engine for five minutes at temperature above 176 º F. Stop the engine and allow the system to cool. Open the radiator drain valve to allow the system to drain. Fill the system with high quality water. Again, operate the engine for five minutes at temperature above 176 º F. Flush the system with clean water until the draining water is clear. Completely drain the cooling system. **Inspect** the water pump standpipe for blockage.

Replace the thermostat. Loosen the hose clamps and remove the hose assembly from the radiator to thermostat housing assembly. Remove the thermostat housing assembly from the cylinder head. Remove the thermostat and gasket from the housing, along with the seal in the housing. Install the new thermostat, seal and gasket into the housing. Re-install the thermostat housing and connect the hose assembly. Tighten the hose clamps. Ensure that the drain valve for the radiator is closed. Fill the cooling system with the recommended coolant / water / coolant additive mixture. Start the engine with the surge tank cap removed and allow the coolant to warm and the thermostat to open. Add coolant mixture until the coolant level in the surge tank is between MIN and MAX or is visible in sight glass. Replace the surge tank cap. Allow the engine to warm to operating temperature while observing for coolant leaks. Stop the engine.

**Inspect** the radiator core and CAC for dirt and debris build-up. Wash any accumulations using high-pressure water, being careful not to damage the fins from excessive pressure. Any grease or oil build-up should first be treated with a non-caustic degreaser to ensure a thorough cleaning.

**Coolant System - Thawing:**

If the coolant system becomes frozen solid, the motorhome must be towed. Place the motorhome in a warm area until completely thawed. If the engine is operated when the cooling system is frozen it will result in engine overheating due to insufficient coolant circulation. Once thawed, check engine, radiator and related components for damage caused by expansion of frozen coolant.

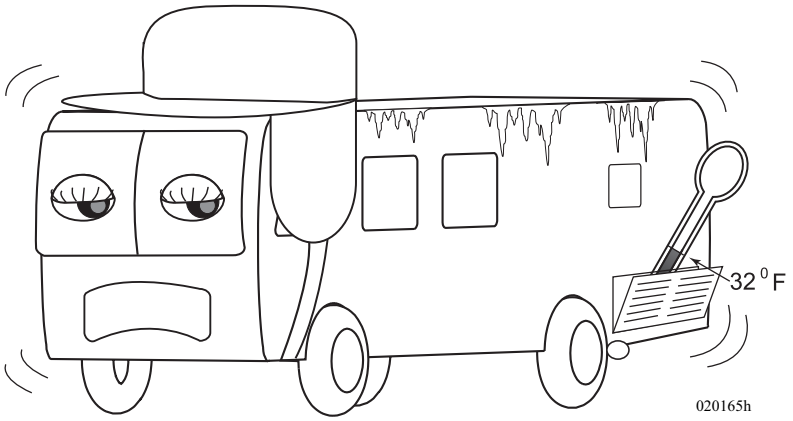


## CHARGE AIR COOLER

The diesel engine uses compression to ignite the fuel/air charge. To increase compression inside the combustion chamber (resulting in increased power output) a turbocharger is added to the engine. The turbocharger is a paired housing assembly with impellers inside each housing connected by a common shaft. One impeller is propelled by the engine exhaust, which drives the other impeller. The function of the other impeller is to increase compression inside the combustion chamber by forcing air into the intake manifold. This process works well, however, the intake air charge is heated two different ways. Through convection by the exhaust gases driving the turbocharger and any time air is compressed heat is produced. This has a negative effect inside the combustion chamber resulting in lost power potential. Therefore, a Charge Air Cooler (CAC) is installed to cool the intake air before it enters the engine. The CAC may be mounted to either the top or side of the radiator. The CAC performs the same function as a radiator, cooling air instead of liquid. Ambient air passing through the CAC will cool the engine's intake air charge.

After leaving the turbocharger, intake air is compressed and heated to approximately 300º to 375º F., depending on the engine load and throttle position. Before air enters the intake manifold, the CAC cools the intake air temperature to the engine manufacturer's specifications. Lower intake air temperatures reduce exhaust emissions, improve fuel economy and increase horsepower. The CAC will continually expand and contract up to ¼" as throttle increases and decreases.

Visually inspect the charge air cooler, every six months, for dirt and debris that may be blocking the fins. If the motorhome develops an oil leak, there is a possibility that the oil will coat the fins of the CAC. Dust will adhere to the oil film and eventually clog the fins, greatly reducing cooling efficiency. When the oil leak is repaired, the CAC must be thoroughly cleaned.

During each oil change **inspect** the engine side of the radiator/CAC assembly for foreign objects that may be causing restriction.

Spraying degreaser on the charge air cooler, as well as using a steam cleaner, will not damage the CAC. **However, pressure washer and steam cleaner nozzles placed too close to the CAC can bend the fins.** The recommended cleaning procedure for the CAC and the radiator, is to use a bucket of mild soap and water. Carefully wash with a bristle brush then rinse using a garden hose, with minimum water pressure, standing back a distance to avoid bending the fins.

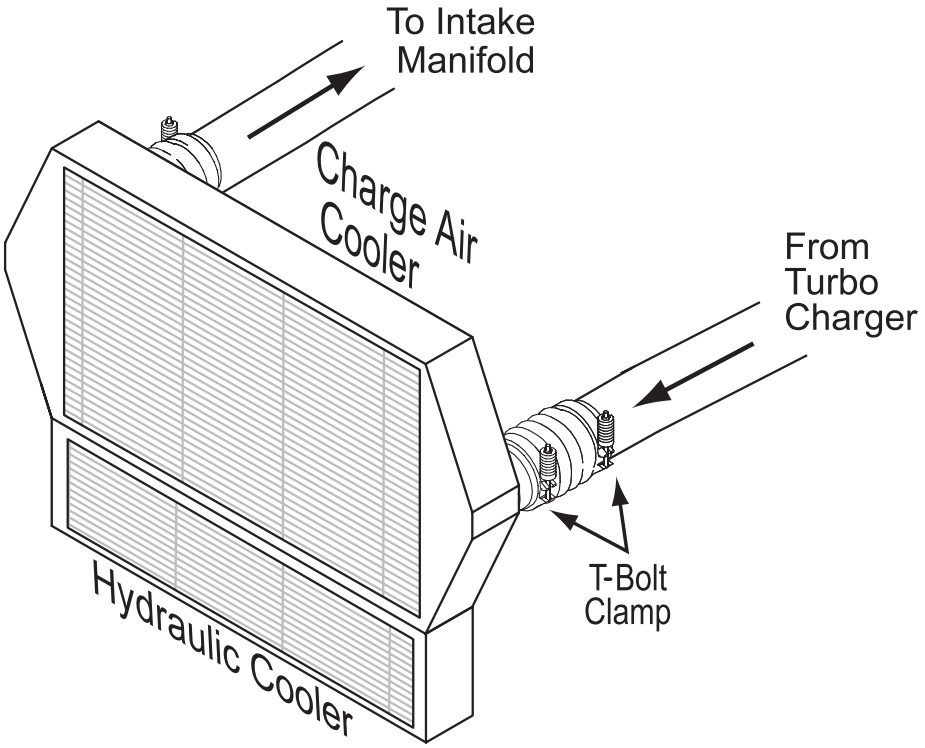

## BRAKE - AUXILIARY

Auxiliary braking systems are designed to supplement the standard wheel braking system. These devices are not designed to bring the motorhome to a complete stop; however, they can assist in controlling the speed of the motorhome. Use of the engine braking system can extend the life of pads, shoes, rotors and drums, saving on costly service brake repairs.

## BRAKE - ENGINE

The "Jake" brake is an engine-braking device that operates on a different principle than an exhaust brake. An engine brake functions by releasing the engine's compression. The effect of the engine brake increases with engine speed. When the engine brake is activated the Allison transmission automatically downshifts, utilizing the gear selected and maximizing the engine braking effect.

When the engine brake activates, an electrical signal is sent to the engine's ECM (electronic control module). The ECM controls a hydraulic circuit that opens the exhaust valves near the end of the compression stroke. The potential engine braking power depends on turbocharger boost pressure, engine speed, compression ratio, injector timing and when the exhaust valves open.

Located on the driver's left console is a **HI/LOW** switch. The **HI/LOW** switch allows for the selection of different levels of engine braking power. Selecting "**LOW**" activates the engine brake on three cylinders. Selecting the "**HI**" setting activates the engine brake on six cylinders. The center position is OFF.

**The engine brake will not be enabled when:**

- The cruise control is active.
- The engine speed goes below 850 RPM.
- An electronic fault code is active.

Applying the service brakes will disengage the cruise control or activating the Jake Brake foot switch will disengage the cruise control and activate the engine brake and brake lights. Use the engine brake when traveling down a hill, on the freeway or exiting the off ramp. The engine brake will allow the engine temperature to decrease while going downhill.

**NOTE: Idle the engine three to five minutes at approximately 1000 RPM to warm the engine before activating the engine brake. Do not operate the engine brake until the engine oil temperature is above 30º C (86º F).**

**WARNING: The engine brake is designed to assist the motorhome service brakes. Not for stopping.**

## TRANSMISSION - *Shift Selector*

The Allison World transmission incorporates the World Transmission Electronic Control (WTEC) system. The system is compromised of five major components connected by a wiring harness: the electronic control unit (ECU), engine throttle position sensor, three speed sensors, remote shift selector (keypad) and the control module. The ECU processes information received from the throttle position sensor, speed sensor, pressure switch and shift selector to activate solenoids on the control module in the transmission. The solenoids control oncoming and off going clutch pressure to provide closed loop shift control. This is accomplished by matching transmission and engine RPM during a shift to establish a desired shift profile within the ECU.

The system is monitored for the first 30 seconds of each engine start. This is referred to as "auto-detect." Auto-detect searches for presence of data inputs of transmission components. Auto-detect enables the ECU functions and diagnostics to respond to items that are detected.

Another feature of the transmission is the ability to "learn" or "adapt." The electronic control system optimizes shift quality by using "Adaptive Shifting." A wide variety of varied shift conditions is required before optimizing shift quality. Generally, five typical shifts of a consistent shift type is needed to optimize shift quality.

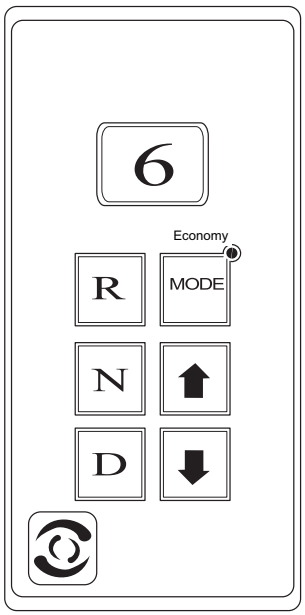

trans shifter w mode light.eps

The range selection is accomplished via the remote push button selector. The controls are **R**, **N**, **D**, arrow **UP**, arrow **DOWN**, **MODE** button and a digital display window. Under normal operation press the **D** button and the digital display shows the highest forward range attainable for shift selection in use. The digital display window will also indicate codes for abnormal conditions, and can even be a useful troubleshooting aid. When the ignition is turned **ON**, the display should be visible. This display indicates the presence of neutral start command. If the display indication is not visible, there is no power to the selector and the transmission will not allow the engine to start. This is an indicator of electrical problems with the engine batteries, ECU on shift selector keypad.

The window displays gear selection, various transmission modes, oil level and transmission fault codes.

**Keypad Functions:**

- Select the **REVERSE** gear by pressing **R**.
- Select **NEUTRAL** by pressing **N**. The area around the **N** button has a raised ridge so the driver can orient his hand to the push buttons by touch, without looking at the display.
- Select **DRIVE** range by pressing **D**. The highest forward gear appears in the display and the transmission will shift to first gear though 6 is displayed.

- The **UPSHIFT** and **DOWNSHIFT** arrow buttons are used to select a higher (if not in "**D**") or lower (if not in "**1**") forward range. These buttons are not functional in **NEUTRAL** or **REVERSE**. One press changes the gear range selected by one. If the button is held continuously, the selected range will continue to change up or down until the button is released or until the highest/lowest possible range of gears is selected.
- The **MODE** button enables a secondary shift point to be selected. This is commonly referred to as "**Economy**." It is further used by the service technician to access diagnostic codes when troubleshooting. The diagnostic circuitry must be enabled to display.
- When the Auxiliary Braking device (Jacob or Exhaust brake) is used, the display changes to a default reading of **2** or **3**. This default is pre-selected at the factory and can only be reprogrammed by an authorized Allison Service Center. The transmission is not in second or third gear. This is only a reference for the transmission downshift points to optimize the engine braking effect.
- Engine temperature may rise when ascending long grades using full throttle. Towing a load will increase the demand on the engine. If this occurs, manually shift the transmission down to the next lower gear and use less throttle. The engine will use less fuel and RPM should increase.

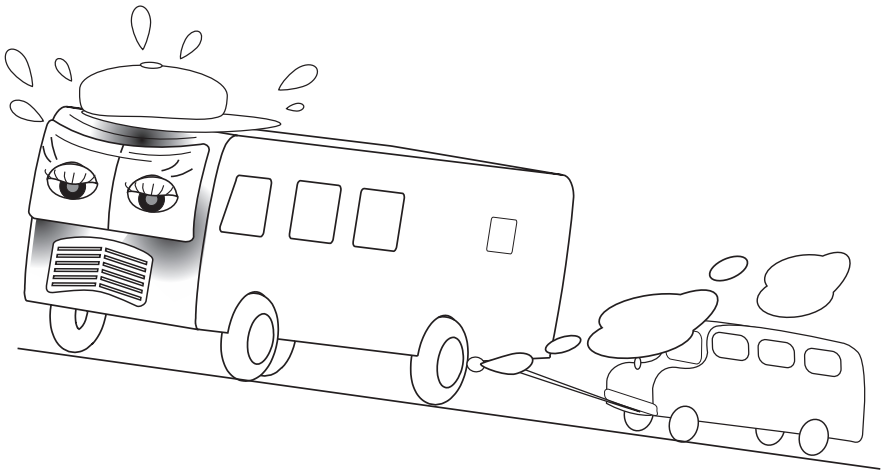

020168C

**NOTE: The transmission will not accept a manually selected gear change to occur if the gear selected is out of the specified operating range.**

**NOTE: The transmission will not shift into gear if the engine RPM is at or above 900. The display will flash "6" indicating the engine RPM is excessive. Select "N" and lower the engine RPM.**

## Transmission Check Light

The electronic control system of the transmission is programmed to inform the operator of a problem with the transmission system and reacts automatically to protect the operator, motorhome and transmission. When the Electronic Control Unit (ECU) detects a **DO NOT SHIFT** (DNS) condition the ECU restricts shifting, turns on the **CHECK TRANS** light in the instrument panel and registers a fault code.

**NOTE: For some problems, fault codes may be registered without the ECU activating the CHECK TRANS light. An Allison Transmission authorized service outlet should be consulted whenever there is a transmission related concern. They have the equipment to check diagnostic codes and correct problems which may arise.**

Each time the engine is started the **CHECK TRANS** icon will light, then turn off after a few seconds. This momentary lighting is to indicate that the status light circuit is working properly. If the **CHECK TRANS** light does not illuminate during start up, or if the light remains on after start up, the transmission system should be checked immediately.

Continued illumination of the **CHECK TRANS** light during vehicle operation (other than start up) indicates that the ECU has signaled a diagnostic code. Illumination of the **CHECK TRANS** light is accompanied by a flashing display from the shift selector. The shift selector display will show actual range attained and the transmission will not respond to shift selector requests.

Indications from the shift selector are provided to inform the operator that the transmission is not performing as designed and is operating at reduced capabilities. Before turning the ignition off, the transmission may be operated for a short time in the selected range in order to “limp home” for service assistance. Service should be performed immediately in order to minimize potential damage to the transmission.

When the Check Trans icon illuminates the keypad will not respond to command and the transmission generally will downshift to 4th gear. The torque converter will not "lock-up" and engine speed is automatically reduced. Direction changes (i.e. forward to reverse) will not be allowed. Locate a safe secure place to park the motorhome. If the engine is shut off, then engaged after a Check Trans indication, the transmission remains in Neutral until the fault causing the Check Trans light has been corrected.

**Diagnostic Codes:**

The diagnostic codes are numerical representations of malfunctions in the transmission operations. Each code is a two digit main code and a two digit sub code. The codes, when detected, are logged in the ECU memory. These codes will fall in two classes: active and inactive. Active codes are codes currently effecting the ECU process. Inactive codes are retained but may not effect the ECU process. The diagnostic mode must be entered. A maximum of five codes, **D1** to **D5**, may be listed at one time. The highest priority code will be listed in **D1**. The **MODE** button will enable selection of sequential codes.

**To Enable Diagnostic Code Selection Display:**

- Stop the motorhome at a safe location.
- Apply the parking brake.
- Simultaneously press the **UP** and **DOWN** arrows twice to enter the stored codes. The first time the arrows are pressed will indicate the oil level display. Press the **UP** and **DOWN** arrows again.
- The codes will display one digit at a time.
- The mode button is pressed to scroll through the codes.
- Any code obtained should be noted and reported to an Allison Service Center for evaluation and possible repair.
- Inactive codes can be cleared by holding the **MODE** button for approximately three seconds. Some codes are self clearing while others will require service or ignition on/off cycles to clear.

## *Periodic Inspections*

The Allison MH Series requires minimum maintenance. Careful attention to the fluid level and the connections for the electronic and hydraulic circuits is very important.

For easier **inspection** the transmission should be kept clean. Make periodic checks for loose bolts and leaking fluid lines. Check the condition of the electrical harnesses regularly. Check the engine cooling system occasionally for evidence of transmission fluid which would indicate a faulty oil cooler. Report any abnormal condition to an Allison dealer.

**Prevent Major Problems:**

Help the WTEC III control system oversee the operation of the transmission. Minor problems can be kept from becoming major problems if an Allison Transmission distributor or dealer is notified when one of these conditions occur:

1. The shifting feels odd.
2. The transmission leaks fluid.
3. There are unusual transmission-related sounds (changes in sound caused by normal engine thermostatic fan cycling, while climbing a long grade with a heavy load, have been mistaken for transmission-related sounds).
4. The **CHECK TRANS** light comes on frequently.

**The Importance of Proper Fluid Levels:**

Transmission fluid cools, lubricates and transmits hydraulic power. Proper fluid levels must be maintained at all times. If fluid level is too low, the converter and clutches do not receive an adequate supply of fluid. If fluid level is too high, the fluid can aerate. Aerated fluid can cause the transmission to shift erratically or overheat.

The MH Series oil level sensor (OLS) allows the operator to obtain an indication of sensor fluid level from the keypad shift selector. Frequently check for the presence of oil level diagnostics in the transmission. If the OLS has not been detected, troubleshooting of the OLS circuit is required. This will have to be performed by an Allison Service Center. After the OLS circuit is repaired, ensure that reset of the “auto-detect” or manual selection of the OLS function by using a Pro-Link transmission diagnostic center.

**Fluid Level Check with the Keypad:**

To Enter Oil Level Sense Mode:

- Park the motorhome on a level surface. Place the transmission in "**N**" and set parking brake.
- The transmission temperature must be at least 140º F./60º C, otherwise an error code will appear.
- The motorhome must be stationary and in **Neutral** for approximately two minutes to allow the fluid to settle in the sump.
- The engine must be idling lower than 800 RPM.
- Simultaneously press the **Up** and **Down** buttons once.

The transmission is now in **Oil Level Sense** mode. The display will indicate one character at a time. An "**o**" followed by "**L**" represents **oil level check** mode. One of the following will be indicated:

- "**o K**" represents the level is okay.
- "**Lo**" represents a low fluid level followed by a numeric indication of the number of quarts needed fill the sump.
- "**HI**" represents an overfull condition followed by a numeric indication of the number of quarts the sump is overfull.
- A countdown of flashing numbers indicate the fluid is still settling. When the fluid has stabilized in the sump the true level will be indicated.
- If an "**o**" "**L**" "**-**" followed by a number displays, the oil level sensor could not read the level due to one of conditions listed in the “Common Oil Level Fault Codes” chart.

**Common Oil Level Fault Codes:**

| Display | Cause of Code |
|---|---|
| o,L - O,X | Setting time too short |
| o,L - 5,0 | Engine speed (RPM) too low |
| o,L - 5,9 | Engine speed (RPM) too high |
| o,L - 6,5 | Neutral must be selected |
| o,L - 7,0 | Sump fluid temperature too low |
| o,L - 7,9 | Sump fluid temperature too high |
| o,L - 8,9 | Output shaft rotation |
| o,L - 9,5 | Sensor failure |

**To Exit Oil Level Sense Mode:**

• Press **Neutral**, **Reverse** or **Drive**.

**NOTE: Reading between the Oil Level Sensor and the dipstick may not agree because the OLS compensates for fluid temperatures.**

**NOTE: To correctly check the transmission fluid level using the dipstick, the transmission fluid must be at operating temperature. The oil level sensor method of checking the fluid level compensates for transmission fluid temperature between 60º C - 104º C (140º F - 220º F). Any temperature below 60º C (140º F) or above 104º C (220º F) will result in an error code.**

## TRANSMISSION LUBRICATING FLUID

Transmission performance, reliability and durability are dependent on the type of lubricating fluids used. From the factory, the transmission has been filled with *TranSynd*™ synthetic transmission fluid. *TranSynd*™ synthetic transmission fluid extends the service intervals. A small tag has been attached to the dipstick identifying that the transmission is filled with *TranSynd*™ synthetic transmission fluid. The dipstick/oil fill is located between the engine and transmission underneath the engine access door in the bedroom.

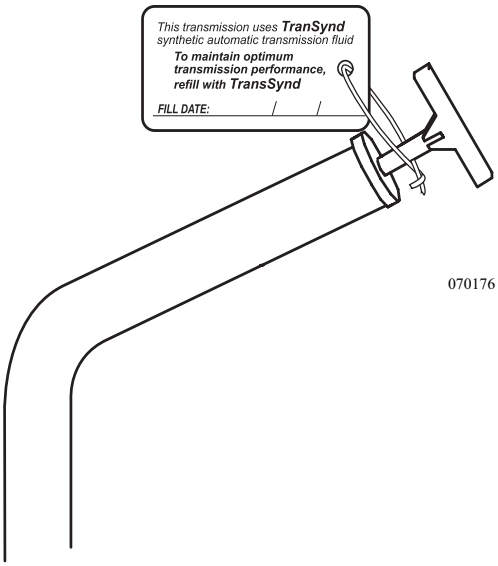


**CAUTION Do not mix *Dexron III*® transmission fluid with TranSynd™ Synthetic transmission fluid.**

**Fluid and Internal Filters Change Interval:**

Fluid and internal filters may require changing earlier depending on the severity of operating conditions. Fluid must also be changed whenever there is evidence of dirt or high temperature operation as indicated by discoloration, strong odor or fluid analysis. Local conditions, severity of operation or duty cycle will dictate more or less frequent service intervals.

**INFORMATION: Refer to the Allison transmission owner's manual or contact an authorized Allison service center for change intervals.**

10

### *Fluid Levels - Cold Check*

**Cold Check - Manual Check Procedures:**

The concept of a cold check is to determine adequate fluid level for safe operating until a hot check can be performed.

*Transmission Oil Level Dipstick.*

**To Check the Fluid When Cold:**

- Park the motorhome on a level surface. Set the parking brake.
- With the engine operated at a low idle, put the transmission in **N** (Neutral).
- Chock the wheels to prevent the motorhome from moving.
- Allow the engine to run at idle (500-800 RPM) for one minute.
- Apply the service brakes and shift to **D** (Drive), then to **N** (Neutral) and next to **R** (Reverse) to fill the system. Finally shift to **N** (Neutral) and release the service brakes. Allow the engine to continue to run at idle (500-800 RPM).
- Remove the dipstick and wipe clean. Reinsert the dipstick fully into the tube and remove to check fluid level. Repeat this to verify the reading if needed.
- Safe operating level is anywhere within the **COLD CHECK** band on the dipstick. The fluid level is sufficient enough to operate until a **HOT CHECK** can be performed.
- If the level is not within this band, add or drain the fluid as necessary to put the level to the middle of the **COLD CHECK** band.
- Perform the **HOT CHECK** at the first opportunity after reaching normal operating temperatures (160º - 200º F/71º - 93º C).

**CAUTION: Low or high fluid level can cause overheating and irregular shift patterns. These conditions can damage the transmission if not corrected.**

## *Fluid Levels - Hot Checks*

- Fluid level rises as temperature increases. Fluid must be hot to ensure an accurate check.
- Be sure fluid has reached normal operating temperature (160º - 200º F/71º - 93º C). If a transmission temperature gauge is not present, check the fluid level when the engine water temperature gauge has stabilized and the transmission has been operated under the load for at least one hour.
- Park the motorhome on a level surface and shift to **N** (Neutral). Apply the parking brake and allow the engine to idle (500 - 800 RPM).
- After wiping the dipstick clean, check the fluid level. Safe operating level is anywhere within the **HOT RUN** band on the dipstick.
- The width of the **HOT RUN** band is approximately one quart of fluid at normal temperature range.
- If the level is not within this band, add or drain the fluid as necessary to put the level within the **HOT RUN** band.
- Be sure that the fluid level checks are consistent. Check the level more than once. If the readings are not consistent, ensure that the transmission breather is clean and not clogged. If the readings are still not consistent, contact the nearest Allison distributor or dealer.

Low sulfur #2 diesel fuel or #1 and #2 commercial winter blend diesel fuels are the most common commercially available and recommended for use.

The use of #2 diesel fuel will result in optimum engine performance.

Try to obtain fuel from sources that are serviced often such as large truck service facilities. The fuel supply is fresh and the possibility of introducing contaminants or water into the fuel system is reduced. It is important to not accidentally run the engine out of fuel. The fuel system on the engine is sensitive to air. If the engine is allowed to run out of fuel, the fuel system will need to be thoroughly primed before the engine will start. Refer to Fuel Filters article for priming instructions.

**WARNING: Do not mix gasohol with diesel fuel. This mixture can cause an explosion.**

**NOTE: If the engine has run out of fuel it will need to be primed. Refer to Fuel Filter for instructions on priming the fuel system.**

**NOTE: Due to the precise tolerances of diesel injection systems, it is extremely important that fuel be kept clean and free of dirt or water. Dirt or water in the system can cause severe damage to both the fuel pump and the fuel injector. Fuel additives for lubricity are not recommended. There are numerous diesel fuel additives to help remove moisture from fuel, prevent microbe growth and to prevent gelling during cold weather. Before adding any type of fuel additive or extender, consult the *Manufacturer's* Owner's Manual.**

## *Fuel Tank*

The diesel fuel tank is made of aluminum. Pick-up and return lines are placed at opposite ends of the tank inhibiting fuel aeration. The engine pickup tube is cut at a 45° angle to allow optimum flow to the engine. The generator and Aqua-Hot intake tubes are set to approximately ¼ of a tank. This will prevent depleting the fuel supply while dry camping.

The bottom of the tank is made in a “V” configuration allowing the engine pick-up tube access to almost all available fuel in the tank. Internal baffles slow fuel slosh. A check valve placed at the bottom of the baffle, at the end of the tank with the pick-up tube, prevents fuel starvation through long corners when fuel supply is low.

**NOTE: Fill the fuel tank if the motorhome is going to be stored for any length of time full. This will reduce the amount of condensation that can form. After storage check the vent tube for blockage. It is not uncommon for insects to plug the vent tube. If pressure or vacuum exists when the fuel cap is removed, the vent tube may be blocked. The end of the vent tube is located on the curbside of the fuel tank, near the bottom.**

## *Fuel Sender*

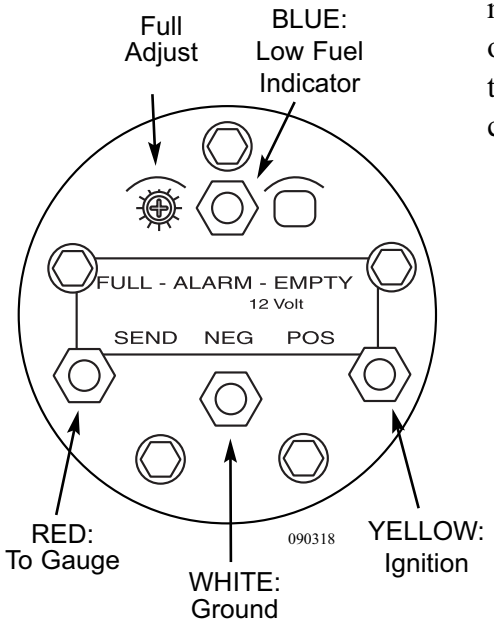


*Fuel Sending Unit.*

The "Centroid" fuel sender has no moving parts and works by measuring capacitance (electrical property) between its inner and outer tubes in the tank. The more fuel between the tubes, the higher the reading. Electronics in the "hockey-puck" head of the sender convert the capacitance to current to drive the fuel gauge.

**Connections:**
**The "Centroid" sender has four connections:**

**1 & 2 - Positive (POS) and Negative (NEG):** Battery voltage to run the electronics in the sender head.

**3 - SEND:** Connects to the SEND terminal of the gauge on the dash.

**4 - ALARM:** Makes a connection internally to the negative (NEG) terminal when the low fuel alarm level is reached (when the fuel gauge is reading about 1/8 tank). This turns on the fuel indicator light on the dash and is not adjustable.

**Adjustments:**
**The "Centroid" sender has two adjustments:**

**1 - EMPTY:** Adjusts for length of sender. It has been set at the factory, covered with a sealant and should not be changed.

**2 - Full Adjustment (FULL):** The full adjustment can be used to correct for slight differences between fuel meters. During installation, it has been calibrated for your meter and should not need readjustment.

The correct adjustment technique, with a full tank of fuel, is to start with the full adjustment screw completely clockwise. This should cause the reading to be above full. Adjust slowly, rotate counterclockwise, until the full mark on the gauge is reached. The intent is to always adjust downscale rather than upscale.

**Troubleshooting:**

**A. Electronic Output:** The sender has a transistorized output to prevent an ohmmeter from getting a correct reading of its output resistance.

**B. Fuel Only:** The sender will not work correctly in conducting fluids such as water (it will read above full all the time in water). One possibility is that when there is a constant above-full reading there may be water in the bottom of the fuel tank.

**C. Contact Centroid:** Probably 90% of the return Centroid tests work okay on the bench. If you have incorrect readings contact Centroid (**telephone: 800-423-3574,** or preferably, **fax: 386-423-3709**) with the symptoms. A short,"fill in the blanks" troubleshooting test is provided to test the sender. It is easier to find the problem that way than after the sender has been removed from the system, since the problem is not necessarily with the sender.

## *Fuel Lines & Hoses*

Make a visual check for fuel leaks at all engine-mounted fuel lines, connections and at the fuel tank pick-up and return lines. Leaks in this area may best be detected by checking for accumulation of fuel under the tank. Engine performance and auxiliary equipment is dependent upon the ability of flexible hoses to transfer lubricating oil, air, coolant and fuel. Maintenance of hoses is an important step in ensuring efficient, economical and safe operation of the engine and related equipment.

**INSPECTION: Check hoses daily as part of the pre-start inspection. Examine hoses for leaks. Check all fittings, clamps and ties carefully. Make sure the hoses are not touching shafts, couplings or heated surfaces, including exhaust manifolds, sharp edges or other obvious hazardous areas. Over time, vibration from the engine and road can move or fatigue clamps and ties. To ensure continued proper support, inspect fasteners frequently and tighten or replace them as necessary.**

## Rear Start Switches

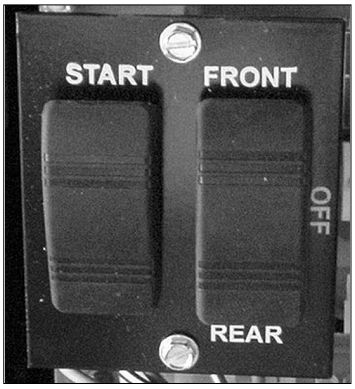

rearstartswitches.tif

The rear start switches are for safety and convenience. The front/rear switch has three positions:

1. Front - In this position, the motorhome will only start with the ignition key.
2. Rear - In this position, the motorhome can only be started with the rear start switch.

**Note: The Ignition switch must also be in the "on" position.**

3. Off - In this position, the starter will not engage with either ignition key or rear start switch. It will also turn the engine off if it is already running.

The "start" switch engages the starter when the front/rear switch is set to "rear" and the ignition switch is "on."

## Fuel Filters

Three filters are used for the engine: a reusable pre-filter, primary and a secondary filter. The reusable pre-filter and primary filter are located in the engine compartment. The secondary filter is located on the engine. Prime the fuel system when filters are changed or if the engine has run out of fuel.

**Filter Maintenance Intervals:**

- Change the primary fuel/water separator filter every six months or every 15,000 miles.
- Refer to the ***Manufacturers Guide*** for service intervals of the secondary fuel filter.

**NOTE: It is recommended to wear gloves and old clothing when working with diesel fuel. Avoid getting any fuel into the interior of the motorhome. Wash clothes separately.**

**Primary Filter System:**

The primary filter system filters the fuel, detects water that may be present in the filter and is used to prime the fuel system. The fuel goes through the reusable pre-filter before entering the primary filter.

When changing the filter, a suitable container will be needed to catch the waste fuel. Properly dispose of waste fuel. **Do not reuse fuel.** This will introduce contaminants into the system.

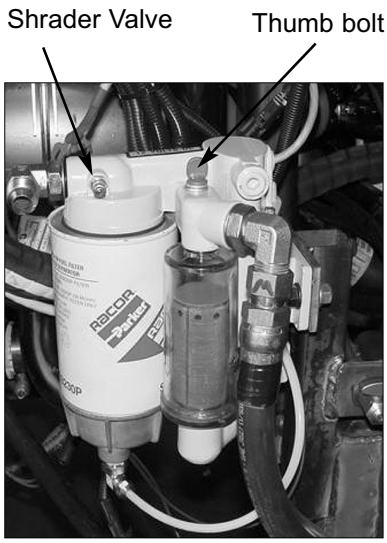


Raycor01.tif

1. Remove the thumb bolt, washer and top housing. Remove the bowl, pre-filter and O-rings.
2. Wear safety goggles when cleaning pre-filter and bowl in a solvent bath or use compressed air as necessary.
3. Inspect the O-rings for cuts or damage. Replace if needed.
4. Lube O-rings with motor oil or clean fuel.
5. Install pre-filter onto bottom block. Install bowl with arrow pointing down. Replace the top housing making sure O-rings are properly seated.
6. Replace thumb bolt and tighten by hand. Using pliers, turn the bolt three-quarter turn to firmly seat the O-ring seals.
7. Remove bottom discharge line and primary filter. Drain fuel from filter into container.
8. Lube O-ring on new filter with motor oil or clean fuel. It is not necessary to fill the filter with fuel.
9. Install filter onto housing. Tighten an additional three-quarter to one full turn after seat contacts base. Install discharge line to bottom of filter.

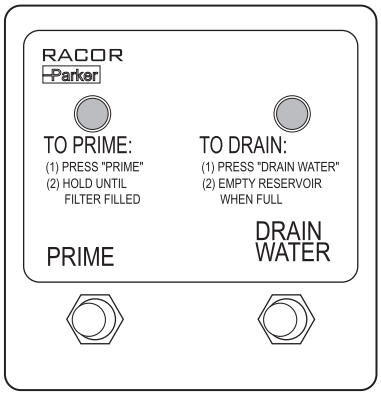


090261B

**NOTE: Over tightening may result in damage to the unit.**

10

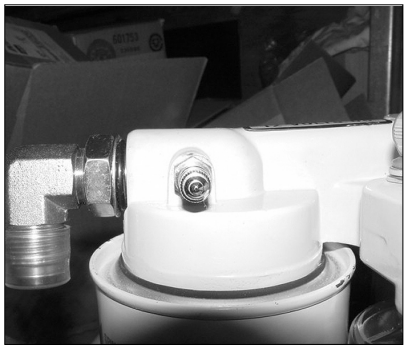

*Schrader Valve* raycor8.tif

**To Prime the Fuel System:**

1. Turn the ignition key on. **Do not attempt to start the engine.**
2. Remove the dust cap from the Schrader valve. (looks like Valve Stem on a tire). Simultaneously press and hold the **Prime** button while holding the Schrader valve open with finger or object. Hold **Prime** button until filter is full. Stand clear as fuel will spray from Schrader valve.
3. After the fuel purges from Schrader valve, release the valve. Continue to hold the **Prime** button one additional minute. This should allow the engine to start.
4. Install the dust cap to the Schrader valve. Start and operate the engine at high idle for about 3 minutes. If the engine fails to readily start, initiate one or two additional purge cycles.

**NOTE: The engine may run rough for a short period until all remaining air, if any, is forced through the fuel system.**

**NOTE: It is normal for the pre-filter bowl not to be full of fuel while the engine is running.**

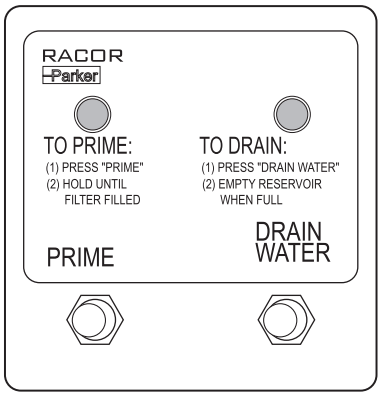


090261b

**Water in Fuel ($H^2O$) Light:**

If the Water in Fuel light illuminates on the dash, the primary filter has detected water in the fuel. Do Not continue engine operation as fuel contaminated with water can damage fuel injectors. Water is heavier than fuel so a discharge line is located at the bottom of the primary filter. Purge water from the filter using the **$H^2O$ purge** button on the filter control panel. Contaminated fuel will be purged from the bottom of the filter into a holding bottle located below the engine on the curbside.

**To Remove Water from the Filter:**

1. Turn the ignition key on. **Do not start the engine.** The **Drain** indicator lamp on the filter control panel should illuminate when the **Drain** button is pressed. The electronics in the control panel will not allow the system to drain if the system has not detected water.
2. Press and hold the **Drain** button. The system will purge water from the filter into the storage container located in the curbside engine compartment. Change the fuel filter at the earliest convenience. Empty the storage container at the same time.

**NOTE: The Drain function will operate only when water is detected in the primary fuel filter.**

**NOTE: Always carry an extra Racor element as one tank full of excessively contaminated diesel fuel can plug a filter.**

## HYDRAULIC SYSTEM

The motorhome uses an engine driven hydraulic pump to operate both the power steering system and the engine hydraulic cooling fan system. The hydraulic system uses the same fluid for both systems, sharing one common reservoir. The hydraulic fluid used is an automatic transmission fluid (*Dexron III®*) which has a wide ambient temperature operating range.

**CAUTION: If ambient temperatures approach 0º F, Pennzoil Arctic Blue hydraulic fluid, or equivalent hydraulic fluid, should be used. Using incorrect hydraulic system fluid weights in cold or arctic temperatures will raise the hydraulic system operating pressure and may damage the hydraulic cooler.**

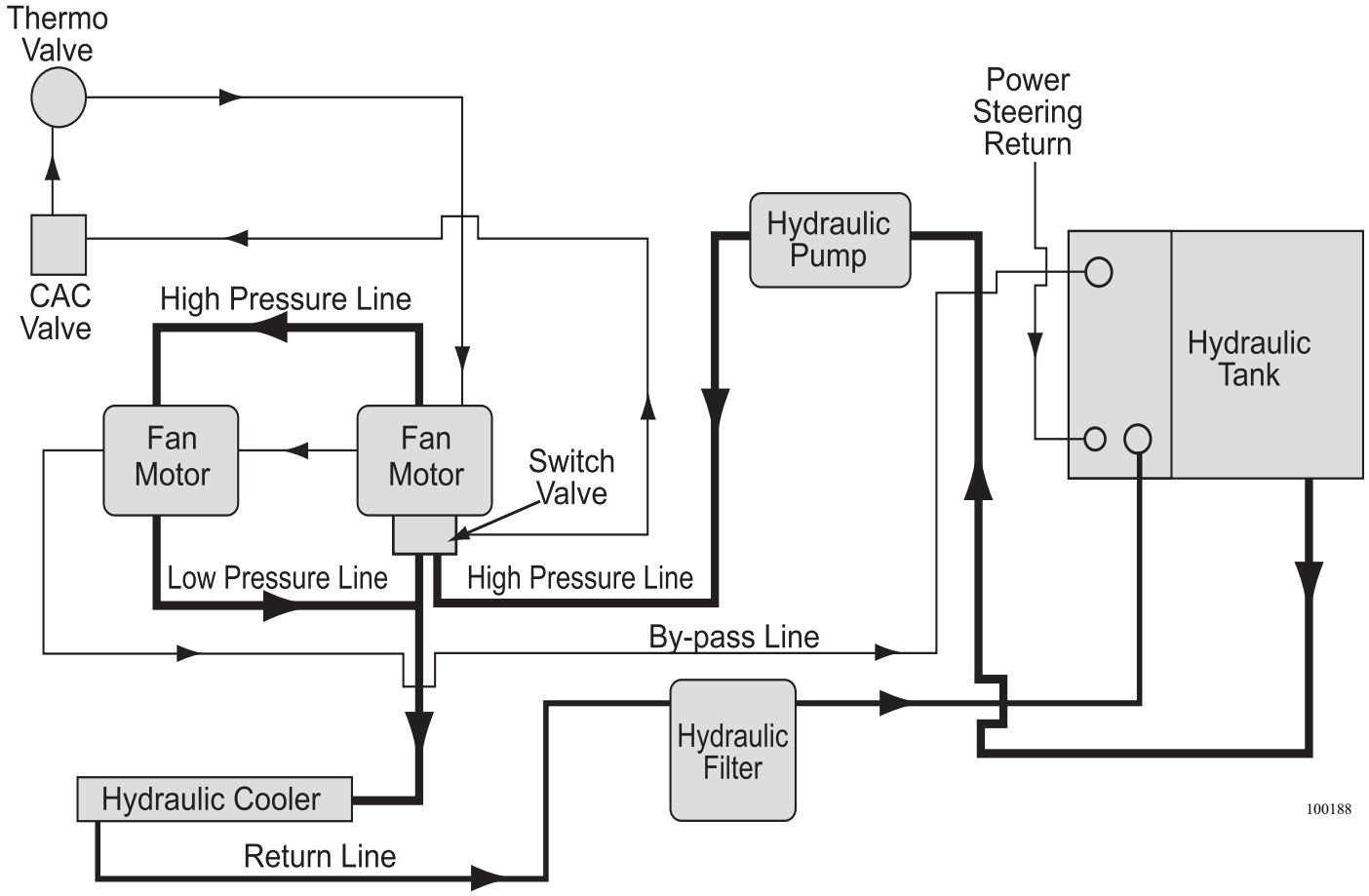


*Typical System: May vary with engine type.*

10

## Hydraulic Pump

The hydraulic pump creates pressure by meshing sets of gears together inside a close tolerance housing. A filtered supply of hydraulic fluid from the hydraulic reservoir enters the intake side of the pump. The meshing gear assembly "squeezes" the oil through the pump to the output side delivering pressurized fluid to the switching valve mounted on the hydraulic fan motor. The ISM engine uses a two-part hydraulic pump assembly. One side of the pump drives the hydraulic fan motors; the other side is used for the power steering. The ISX and Series 60 engines uses a transmission-mounted hydraulic pump for the fan motors. The power steering pump is mounted behind the compressor on the ISX, and directly to the accessory drive on the Series 60. Each pump type is equipped with internal by-pass pressure relief valves. If hydraulic pressure should exceed specification, the internal by-pass valve will be forced open to lower fluid pressure and maintain the pressure at the specified rating. Hydraulic pressure is generally not rated in psi but in the term Bar. One bar is equivalent to approximately 14.5 psi. Hydraulic pressures with a system at no load may be as low as eight bars on the output side of the pump. When a load is placed on the hydraulic pump, such as fan speed ramping up, hydraulic fluid flow slows from hydraulic fluid restriction and pressure increases.

This may be understood as a faucet with a garden hose attached. Crimping the hose with the faucet on will create pressure from the restriction. This principle applies to the hydraulic system. The hydraulic pump is the supply; the load would be the hydraulic fan motors. Hydraulic system pressure at full load can exceed 130 bar or 2000 psi. Hydraulic system pressure falls dramatically after the load. The return line pressure may be as low as six to eight bars. The fluid enters the hydraulic cooler where the heat is dissipated.

## Hydraulic Cooler

The hydraulic cooler is an important part in the hydraulic system. This helps keep the hydraulic fluid from overheating. When a load is placed on the hydraulic system, heat is created in the fluid. The hydraulic pump builds pressure that creates heat in the fluid. The restriction from the loads applied also creates heat. This heat must be dissipated to keep the hydraulic fluid from overheating and breaking down. After cooling, the fluid is filtered before returning to the reservoir.

Care must be used when starting an engine in very cold or arctic climates. As with any oil, lower temperatures thicken the oil. Hydraulic system pressure increases due to the viscosity of the fluid. Although the hydraulic pump is equipped with pressure relief valves, the thick oil on the return line can exceed the operating pressure of the hydraulic cooler.

## Hydraulic Fan System

The hydraulic fan drive system cools the radiator, charge air cooler, hydraulic fluid cooler, transmission cooler and the dash air conditioning condenser. The components of the hydraulic fan system are: hydraulic reservoir, filter, pump, hydraulic fan motor(s), hydraulic switching valve and thermovalve. Cooling fan speed is proportional to engine speed and coolant temperature. When coolant temperature rises above 185º F, the thermovalve slowly closes off the bypassing hydraulic fluid from the switching valve. As coolant temperature rises, a spool valve begins to move in the switching valve. The spool valve directs the pressurized hydraulic fluid to the fan motors. The higher the coolant temperature, the further the spool valve is moved in the switching valve, providing a higher volume of pressurized hydraulic fluid to the fan motors. Fan motor speed is increased to meet the demand for cooling. The action of the thermovalve is designed to move the spool in the switching valve to ramp up fan motor speed. This design saves horsepower and increases fuel mileage by precise control of hydraulic fan motor speed. The fan motors will increase in speed when the motorhome is ascending long hills or operating in high ambient temperatures. It is normal for the fans to "roar" when they are operating. Fan motor speed and engine RPM are approximately the same with the switching valve at full engagement.

## Thermovalve

The wax filled thermovalve is mounted at the top of the radiator sensing coolant temperature. The thermovalve controls the action of the switching valve. When the radiator is cool, the hydraulic fluid is allowed to flow through the inlet and outlet ports of the thermovalve and return to the hydraulic reservoir. As the coolant temperature inside the radiator rises to approximately 185º F, the wax inside the thermovalve begins to melt and expand. This begins to restrict hydraulic fluid flow through the thermovalve. The restricted hydraulic fluid pressure then begins to move the internal spool valve of the switching valve. This process will continue until coolant temperature inside the radiator reaches approximately 199º F. At this temperature hydraulic fluid flow through the thermovalve is stopped, moving the spool valve to full open position.

### Switching Valve

The switching valve is mounted to the fan motor. This valve controls direction of high pressure hydraulic fluid flow. High pressure hydraulic fluid comes from the hydraulic pump to the switching valve before returning to the reservoir. Either the thermovalve or the electric override valve directs the fluid to the spool in the switching valve. When the radiator is cool, pressurized hydraulic fluid will bypass the fan motors and return to the fluid reservoir. As radiator temperature rises, the thermovalve signal is slowed or stopped to the switching valve. High pressure fluid is then directed to the fan motors, cooling the radiator.

### Electric Override (ISM only)

Motorhomes are equipped with an electric over hydraulic override control valve. The override valve is located at the lower rear corner of the radiator package. This valve is a normally closed valve which is plumbed parallel with the thermovalve and performs the same hydraulic signal function as the thermovalve, but is electrically controlled by the engine computer.

The engine computer monitors intake manifold temperature. The electronics of the engine control a relay located in the rear run box. When intake manifold operating temperatures are normal, the electronic engine energizes the coil of the relay. This energizes the coil of the override valve and the hydraulic fluid signal flows through the override valve to the thermovalve. If the engine electronics detect an over temperature condition of the intake manifold, the coil of the 87a relay is deactivated. Power to the override valve is removed, hydraulic fluid flow signal is stopped and internal spool of the switching valve moves to full open position. The high pressure fluid is directed to fan motors cooling the radiator.

### Fan Motor

The fan motors are driven by hydraulic fluid pressure from the switching valve. The fan motors work on the same mechanical principle as a hydraulic pump only the mechanical principle when applied to fan motors is reversed. Instead of creating hydraulic pressure by meshing gears together in a close tolerance housing, the fan motor(s) receive hydraulic pressure. The hydraulic fluid drives the fan motor's internal gear assembly, spinning the fan motor and attached fan blades.

The switching valve is mounted to one fan motor. Fluid is directed to the input of that motor first. The output of the first motor is hooked to the input of the second motor (ISM only). The hydraulic fluid is then cooled and filtered before returning to the reservoir.

## Hydraulic Filter

The hydraulic filter system, located in the engine compartment, has special features to protect the precision tolerance hydraulic components. The filter head assembly has a built in sight gauge that indicates fluid flow through the filter. A specially designed media filter absorbs harmful contaminants such as moisture and dirt. When the engine is running, use the sight gauge to check the filtering process. The green zone indicates the hydraulic fluid is being properly filtered and flowing unrestricted through the filter and head assembly back to the reservoir. As the filter traps harmful debris and contaminants, the indicator will move into the red zone. When the indicator is in the red zone, it is indicating filter is clogged and fluid is bypassing the element returning to the reservoir. The filter head is equipped with a built in bypass valve. This prevents a clogged filter from developing a leak due to excess hydraulic fluid pressure inside a clogged filter.

The filter is rated at ten micron*. Change the filter before the built in sight gauge is operating in the red zone. This will ensure the hydraulic fluid is properly filtered.

**Filter number: Parker IN HC 5720 (ten micron)**
***One micron is one millionth of one meter.**

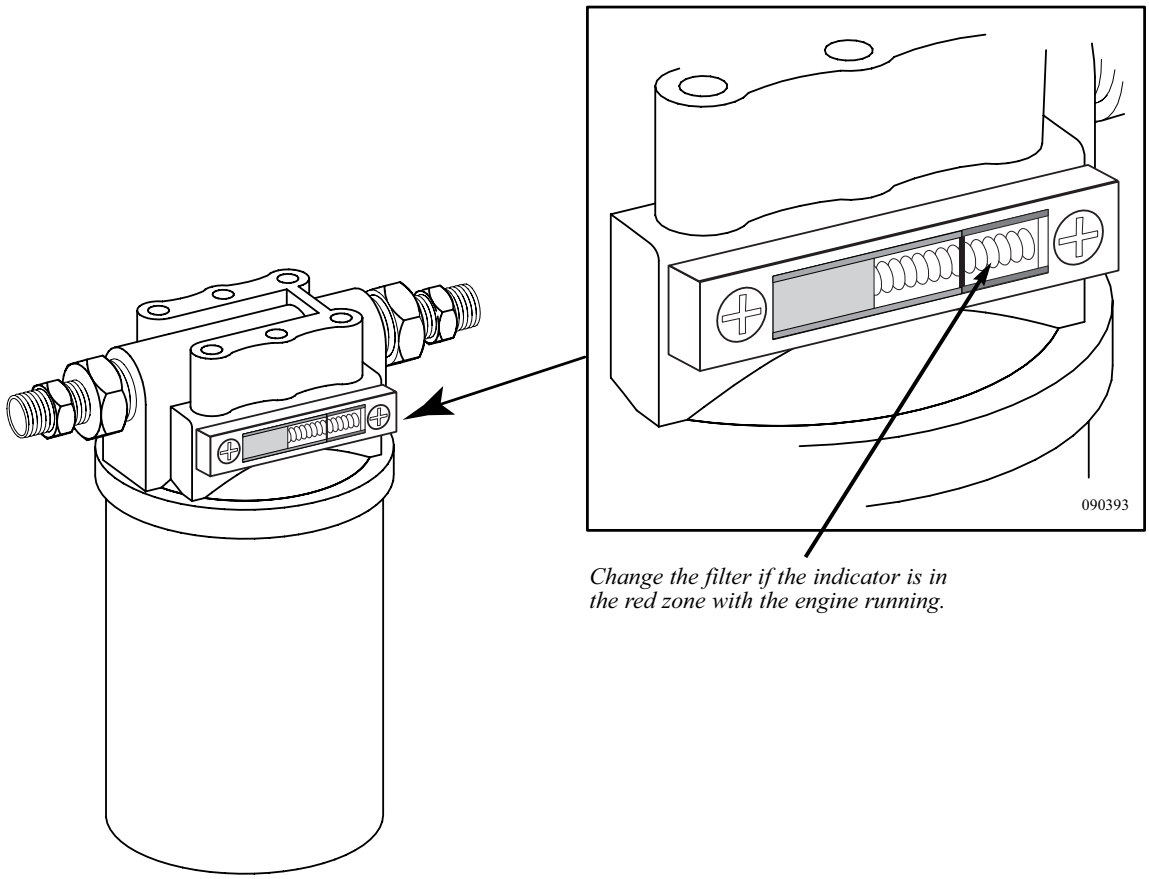


*Change the filter if the indicator is in the red zone with the engine running.*

10

### *Hydraulic Reservoir*

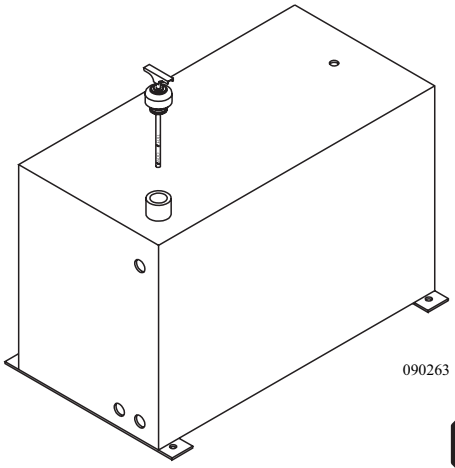


*Steering/Fan Reservoir*

The hydraulic reservoir, located in the engine compartment, is made from aluminum so the tank will not be affected by moisture that may condense. The oil level in the reservoir should be checked when the hydraulic fluid is at operating temperature. This should be done every 6,000 miles or three months. The oil dipstick/oil fill is located on top of the reservoir. The oil level should be kept between the full and add marks on the dipstick. When performing fluid level checks, inspect fittings and hoses for signs of leakage. Look underneath the motorhome for any signs of fluid leakage. Avoid untimely and costly failures by having leaks repaired. Change the hydraulic oil filter every 15,000 miles or once a year.

**NOTE: Use *Dexron III*® transmission fluid when adding oil.**

## AIR FILTER

### *Changing the Filter*

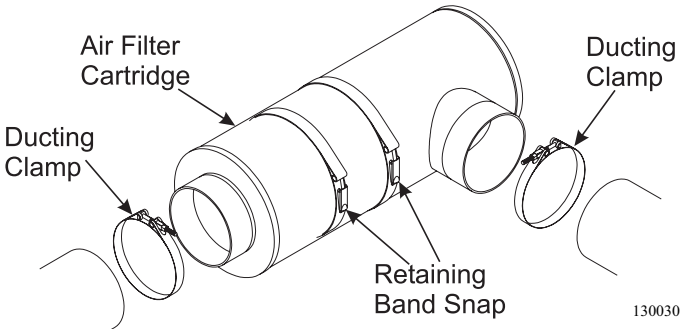


When the air filter needs to be changed, the entire air filter cartridge is discarded and replaced by loosening the inlet and outlet ducting clamps and releasing the retaining band snaps. The air filter is located in the rear engine compartment.

### *Air Filter Minder*

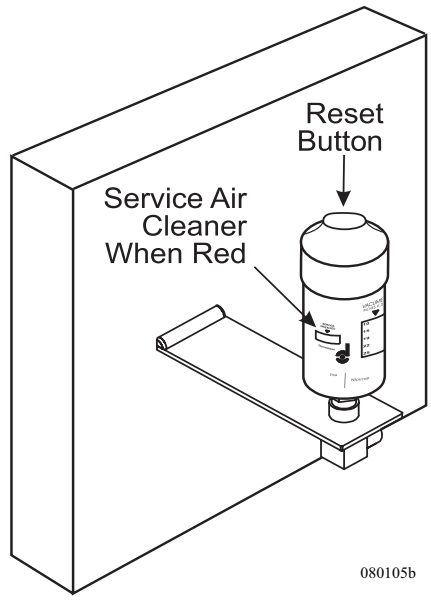


The air filter minder is a precision overflow restriction gauge designed to take the guesswork out of air cleaner replacement.

The air filter minder is located in the rear engine compartment. Operation is simple and virtually foolproof. As dirt captured by filter cartridge slowly builds up, vacuum between the filter and charge air cooler increases as indicated by the filter minder on an easy to read scale. The indicator locks at the point of maximum restriction so readings can be taken with or without the engine running.

When the desired change-out point is reached, the air filter should be replaced and the service indicator is easily reset by pushing the **Reset** button on the top of the minder.

## EGR FILTER (DETROIT ONLY)

The PuraGuard filter is used to remove oil from the air supply for the EGR valve system. Oil in pneumatic valves can cause them to operate sluggishly or not at all. Removing the oil from the air supply for the EGR system helps to ensure longevity of the valves. The filter should be drained monthly and replaced annually. When performing maintenance, always dispose of drainage and filters properly.

**Caution: Discharge air system before removing filter.**

*EGR Filter* DSC07197.Tif

10

## LUBRICATION CHARTS -
*Cummins*

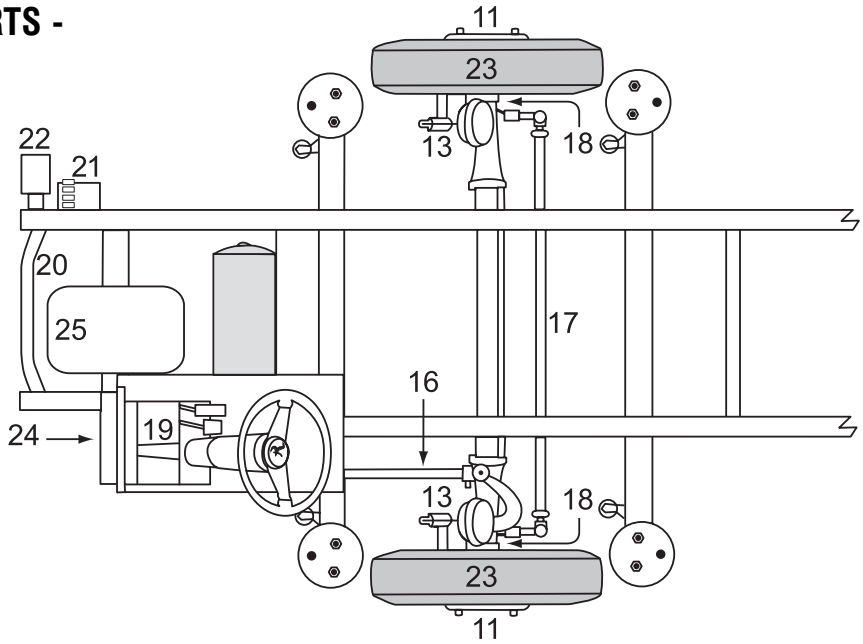


070173g

| | Component: | Action: | When: | Code-Refer to Chart: |
|---|---|---|---|---|
| 1. | Engine Oil | Keep to Full Mark | Before Each Trip + Daily Enroute | EO |
| 2. | Engine Oil Filter | Replace | At Oil Change | OEM |
| 3. | Transmission | Keep to Full Mark | Refer to OEM Manual | TS |
| 4. | Engine Coolant | Replace | Refer to OEM Manual | AF |
| 5. | Hydraulic Fluid Reservoir | Keep to Full Mark | Monthly | TF |
| 6. | Hydraulic Filter | Replace | 15,000 or Annually | TF |
| 7a. | Filter Fuel/Water Separator (Primary) | Replace | 15,000 or 6 Months | FF |
| 7b. | Filter Fuel (Secondary) | Replace | Refer to OEM Manual | OEM |
| 8. | Air Dryer Filter | Replace | 2 -3 Years | - |
| 9. | Radiator/Charge Air Cooler | Inspect | Weekly | - |
| 10. | Coolant Filter | Replace | Refer to OEM Manual | OEM |
| 11. | Wheel Bearings | Re-pack | 30,000 or Annually | HT |
| 12. | Rear Differential | To Filler Plug | 250,000 or 3 Years | MP |
| 13. | Slack Adjusters/S-Cams | Grease-2 Fitting | 10,000 or 3 Months | CBL |
| 14. | Drive Shaft Universal Joints | Grease-2 Fittings | 10,000 or Annually | CL |
| 15. | Drive Shaft Slip Yoke | Grease-1 Fitting | 10,000 or Annually | CL |
| 16. | Drag Link | Grease-1 Fitting | 5,000 or 6 Months | CL |
| 17. | Center Link | Grease-2 Fittings | 5,000 or 6 Months | CL |
| 18. | Spindles/Kingpins | Grease-2 Fittings ea. | 5,000 or 6 Months | CL |
| 19. | Steering Driveshaft | Grease-3 Fittings | 30,000 or Annually | CL-4 |
| 20. | Air Tank Drains | Drains | Monthly | - |
| 21. | HWH Reservoir | Keep to Full Mark | 6,000 or 3 Months | TF |
| 22. | RVA Reservoir | Keep to Full Mark | 6,000 or 3 Months | TF |
| 23. | Tire Pressure | Check | Before Each Trip + Daily Enroute | - |
| 24. | Steering Box | Grease-1 Fitting | Twice a Year | CL |
| 25. | Generator | Refer to Service Manual | Refer to OEM Manual | OEM |
| 26. | Batteries | Inspect | Bi-Monthly | DW |
| | | Apply | 10,000 or Quarterly | P |

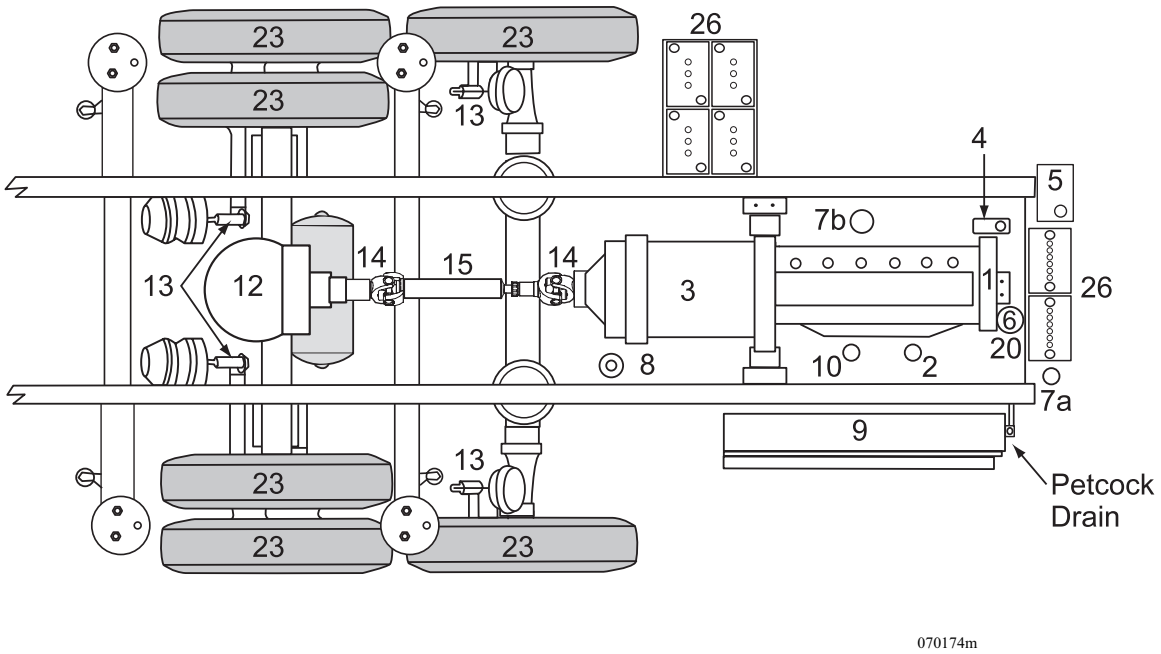


**Lubrication Code Chart:**

| | |
|---|---|
| CL-4 | U-Joints located inside coach under steering cover. |
| EO | Engine oil as recommended by engine manufacturer. |
| OEM | Refer to the Original Equipment Manufacturer's manual. |
| MP | API GL-5 or MT-1 type gear lubricant - Pennzoil Gear Plus SUPER-EW 75W-90, Synthetic. |
| GO | EP-SAE 90 gear oil. |
| CL | Chassis lubricant should be a high quality non corrosive multi-purpose lithium soap base lubricant that is water resistant and designed to withstand extremely high operating temperatures. |
| TF | Transmission fluid. Use *Dexron III*® transmission fluid only. |
| AF | Consult ***Cummins* Owner's Manual** for antifreeze type. |
| BF | Dot-3 Brake fluid. |
| FF | Fuel Filter. |
| CBL | Clay-based Lubricant. |
| HT | High Temperature Bearing Grease |
| TS | TranSynd™ |
| DW | Distilled Water |
| P | Petroleum Jelly |

**NOTE: Service must be performed every twelve (12) months, regardless of actual mileage, to protect seals, bearings and gaskets from drying out and failing. The motorhome must be started and driven for at least 20 miles bi-monthly. It is important to remember the generator maintenance interval is based on hours of usage. Consult the *Cummins* Owner's Manual for the generator service interval.**

## *Detroit Diesel Series 60*

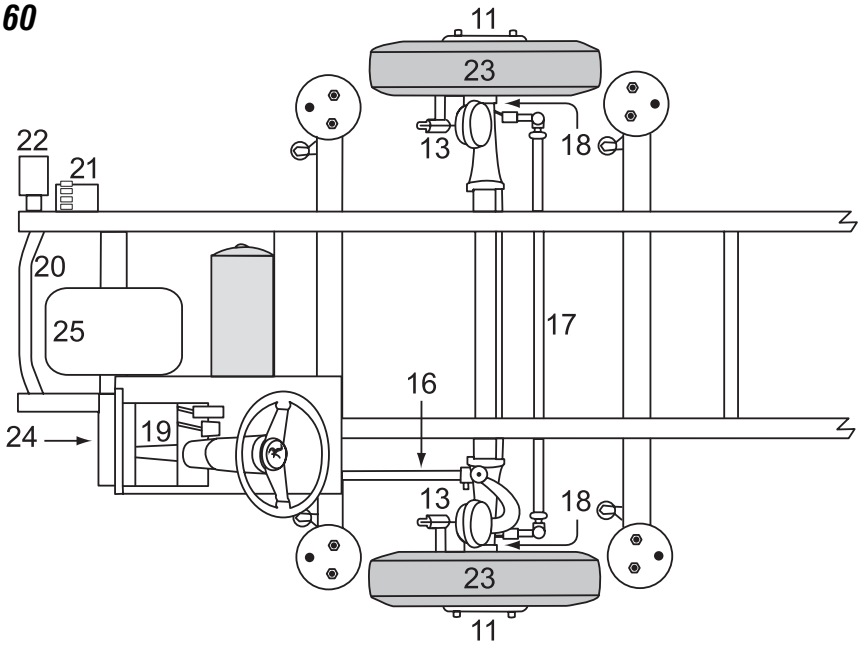


070173g

| | Component: | Action: | When: | Code-Refer to Chart: |
|---|---|---|---|---|
| **1.** | Engine Oil | Keep to Full Mark | Before Each Trip + Daily Enroute | EO |
| **2.** | Engine Oil Filter | Replace | At Oil Change | OEM |
| **3.** | Transmission | Keep to Full Mark | Refer to OEM Manual | TS |
| **4.** | Engine Coolant | Replace | Refer to OEM Manual | AF |
| **5.** | Hydraulic Fluid Reservoir | Keep to Full Mark | Monthly | TF |
| **6.** | Hydraulic Filter | Replace | 15,000 or Annually | TF |
| **7a.** | Filter Fuel/Water Separator (Primary) | Replace | 15,000 or 6 Months | FF |
| **7b.** | Filter Fuel (Secondary) | Replace | Refer to OEM Manual | OEM |
| **8.** | Air Dryer Filter | Replace | 2 -3 Years | - |
| **9.** | Radiator/Charge Air Cooler | Inspect | Weekly | - |
| **10.** | Coolant Filter | Replace | Refer to OEM Manual | OEM |
| **11.** | Wheel Bearings | Re-pack | 30,000 or Annually | HT |
| **12.** | Rear Differential | To Filler Plug | 250,000 or 3 Years | MP |
| **13.** | Slack Adjusters/S-Cams | Grease-2 Fitting | 10,000 or 3 Months | CBL |
| **14.** | Driveline Universal Joints | Grease-2 Fittings | 10,000 or Annually | CL |
| **15.** | Driveline Slip Yoke | Grease-1 Fitting | 10,000 or Annually | CL |
| **16.** | Drag Link | Grease-1 Fitting | 5,000 or 6 Months | CL |
| **17.** | Center Link | Grease-2 Fittings | 5,000 or 6 Months | CL |
| **18.** | Spindles/Kingpins | Grease-2 Fittings ea. | 5,000 or 6 Months | CL |
| **19.** | Steering Driveline | Grease-3 Fittings | 30,000 or Annually | CL-4 |
| **20.** | Air Tank Drains | Drains | Monthly | - |
| **21.** | HWH Reservoir | Keep to Full Mark | 6,000 or 3 Months | TF |
| **22.** | RVA Reservoir | Keep to Full Mark | 6,000 or 3 Months | TF |
| **23.** | Tire Pressure | Check | Before Each Trip + Daily Enroute | - |
| **24.** | Steering Box | Grease-1 Fitting | Twice a Year | CL |
| **25.** | Generator | Refer to Service Manual | Refer to OEM Manual | OEM |
| **26.** | Batteries | Inspect | Bi-Monthly | DW |
| **27.** | EGR Filter | Apply | 10,000 or Quarterly | P |
| | | Drain / Replace | Monthly/Annualy | OEM |

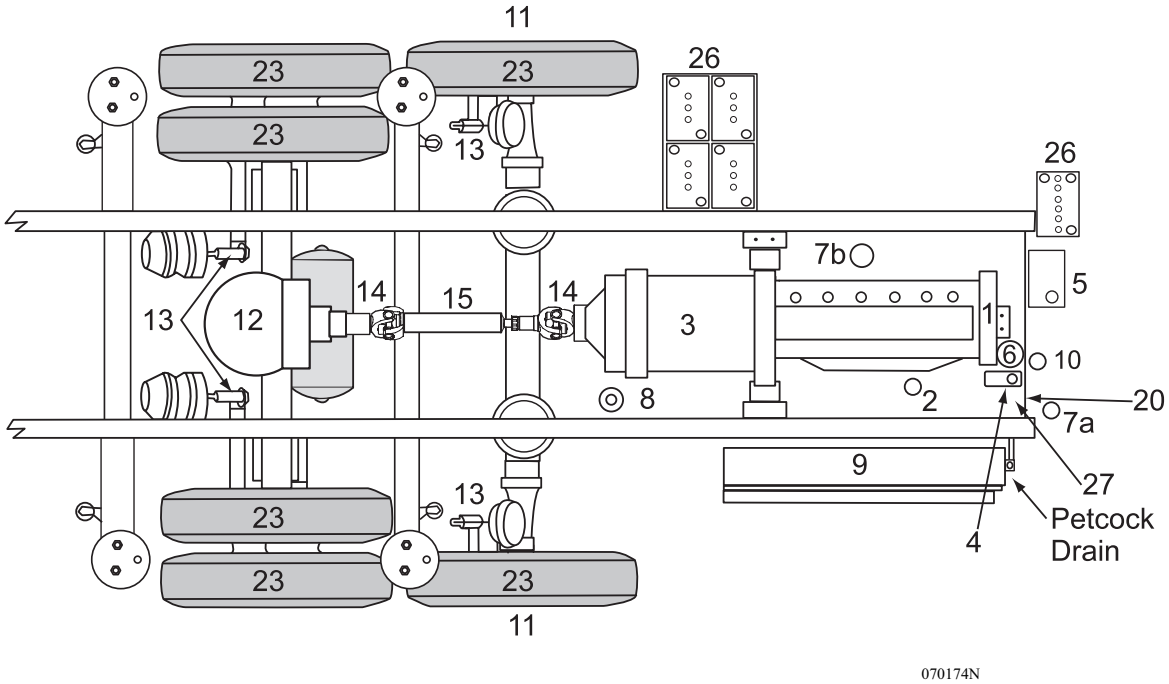


**Lubrication Code Chart:**

| | |
|---|---|
| CL-4 | U-Joints located inside coach under steering cover. |
| EO | Engine oil as recommended by engine manufacturer. |
| OEM | Refer to the Original Equipment Manufacturer's manual. |
| MP | API GL-5 or MT-1 type gear lubricant - Pennzoil Gear Plus SUPER-EW 75W-90, Synthetic. |
| GO | EP-SAE 90 gear oil. |
| CL | Chassis lubricant should be a high quality non corrosive multi-purpose lithium soap base lubricant that is water resistant and designed to withstand extremely high operating temperatures. |
| TF | Transmission fluid. Use *Dexron III*® transmission fluid only. |
| AF | Consult ***Detroit Diesel Operators Guide*** for antifreeze type. |
| BF | Dot-3 Brake fluid. |
| FF | Fuel Filter. |
| CBL | Clay-based Lubricant. |
| HT | High Temperature Bearing Grease |
| TS | TranSynd™ |
| DW | Distilled Water |
| P | Petroleum Jelly |

**NOTE: Service must be performed every twelve (12) months, regardless of actual mileage, to protect seals, bearings and gaskets from drying out and failing. The motorhome must be started and driven for at least 20 miles bi-monthly. It is important to remember the generator maintenance interval is based on hours of usage. Consult the *Cummins* Owner's Manual for the generator service interval.**

## PARTS - COMMON SOLENOIDS & SENDERS

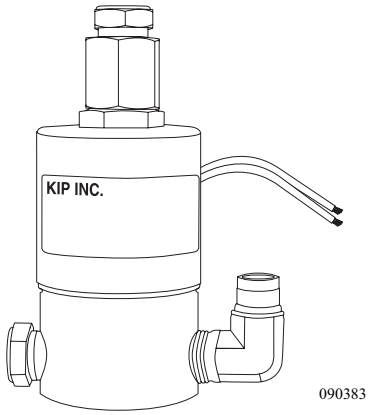


**Front Bag Dump or Tag Axle Solenoids:**
- Used on hydraulic level and tag axle units.
- Dumps air in front air bags and is used to raise or lower tag axle.
- Located in the generator compartment on the curbside.
- Type- MAC 225B-601BAAA

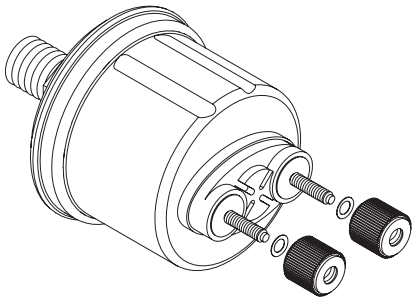


**Oil pressure Sending Unit:**
- One post is used for the oil pressure gauge and one post is for the warning light.
- Type- VDO 360 0238NDO 0-100 Ohm

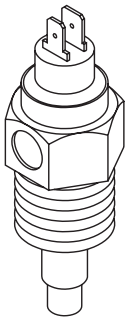


**Water Temperature Sending Unit:**
- One post is used for the water temperature gauge and one post is used for the warning light.
- Type- VDO 323 0998

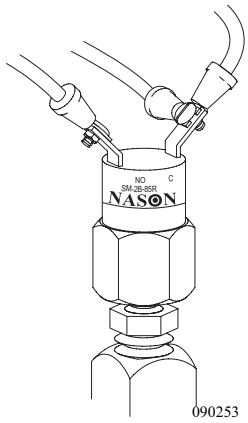


**Low Air Switch:**
- 1/8-27 NPT thread.
- Normally closed until approximately 65 psi.
- Located behind dash panel.
- Type- Masson sm-2B-85R, MP# 16616389

**Transmission Sending Unit:**
- Located on the bottom of the tailshaft housing, between hoses.
- Type- VDO 323 0868

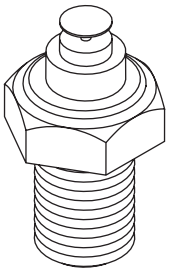

090260

**House Disconnect Solenoid:**
- Two 105 Amp continous duty solenoids, controlled by switch at entry door.
- Solenoid interrupts House battery power to interior 12 Volt fuse panel and the front run panel.
- Four post solenoid with isolated coil.
- Located on the Rear Run Plate.
- Vendor # 01-00055-002

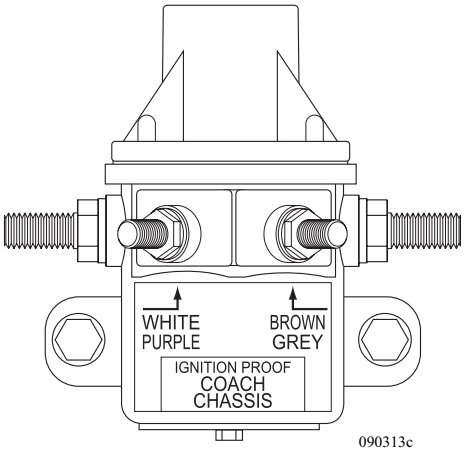


090313c

**Link Assembly:**
- Located on ends of connecting rod between axles and ride height valve.
- Secures connecting rod with hose clamp.
- Type Hadley Products HPB450-3.
- MP# 2057.

link copy

10

## SPECIFICATIONS - DIMENSIONS CHART

| 2004 Navigator Specifications | 38PST | 40PBD | 40PBDD | 40PBT | 42SBW | 43PKD | 43PBQ | 45DCDS | 45PBDD | 45PBT |
|---|---|---|---|---|---|---|---|---|---|---|
| **Weights** | | | | | | | | | | |
| Gross Vehicle Weight Rating | 47,600 | 47,600 | 47,600 | 47,600 | 47,600 | 47,600 | 47,600 | 47,600 | 47,600 | 47,600 |
| Gross Combined Vehicle Weight Rating | 57,600 | 57,600 | 57,600 | 57,600 | 57,600 | 57,600 | 57,600 | 57,600 | 57,600 | 57,600 |
| Front Gross Axle Weight Rating | 14,600 | 14,600 | 14,600 | 14,600 | 14,600 | 14,600 | 14,600 | 14,600 | 14,600 | 14,600 |
| Rear Gross Axle Weight Rating | 23,000 | 23,000 | 23,000 | 23,000 | 23,000 | 23,000 | 23,000 | 23,000 | 23,000 | 23,000 |
| Tag Axle Weight Rating (lbs.) | 10,000 | 10,000 | 10,000 | 10,000 | 10,000 | 10,000 | 10,000 | 10,000 | 10,000 | 10,000 |
| **Measurements** | | | | | | | | | | |
| Wheelbase **(Shorten wheel base 18" on 45' units)** | 236.5" | 245" | 245" | 245" | 269.5" | 281.5" | 281.5" | **283.5"** | **283.5"** | **283.5"** |
| Overall Length | 38'-10" | 40' 10" | 40' 10" | 40' 10" | 42' 4" | 43' 4" | 43' 4" | 45' | 45' | 45' |
| Overall Height (with A/C) | 12' | 12' | 12' | 12' | 12' | 12' | 12' | 12' | 12' | 12' |
| Interior Height | 79" | 79" | 79" | 79" | 79" | 79" | 79" | 79" | 79" | 79" |
| Interior Width | 96" | 96" | 96" | 96" | 96" | 96" | 96" | 96" | 96" | 96" |
| Exterior Width | 100.5" | 100.5" | 100.5" | 100.5" | 100.5" | 100.5" | 100.5" | 100.5" | 100.5" | 100.5" |
| **Tank Capacity** | | | | | | | | | | |
| Water Heater (gal) | 10 | 10 | 10 | 10 | 10 | 10 | 10 | 10 | 10 | 10 |
| Gray Tank (gal) | 60 | 60 | 60 | 60 | 60 | 60 | 60 | 60 | 60 | 60 |
| Black Tank (gal) | 40 | 40 | 40 | 40 | 40 | 40 | 40 | 40 | 40 | 40 |
| Fresh Tank (gal) | 100 | 100 | 100 | 100 | 100 | 100 | 100 | 100 | 100 | 100 |
| Fuel Tank (gal) | 150 | 150 | 150 | 150 | 150 | 150 | 150 | 150 | 150 | 150 |
| **LP Tank (gal)*** | 38 | 38 | 38 | 38 | 38 | 38 | 38 | 38 | 38 | 38 |

*** Actual filled LP capacity is 80% of listing due to safety shut off required on tank.**

**NOTE: All tank capacities are estimated based upon calculations provided by the tank manufacturers and represent approximate capacities. The actual "usable capacity" may be greater or less then the estimated capacities based upon fabrication and installation of the tanks.**

**NOTE: The actual overall length of the recreational vehicle may differ from that indicated due to variances in the manufacturing process and/or installed components. The actual length may be greater or less than that indicated.**

| CHASSIS LIQUID CAPACITIES | ISM | Series 60 |
|---|---|---|
| Engine Oil | 38 Qts. | 40 QTs |
| Transmission Oil (initial amount) | 32 Qts. | 32 |
| Transmission Oil (with service) | 36 Qts. w/ filter | 36 w/Filter |
| Radiator Coolant (initial amount) | 50 - 55 Qts. | 50-55 QTs. |
| A/C Refrigerant (initial amount) | 4 lbs. 134 A | 4lbs. 134 A |
| Hydraulic Oil | 50 - 55 Qts. (Aluminum Tank) | 50-55 QTs |

| ENGINE SPECIFICATIONS | ISM | SERIES 60 |
|---|---|---|
| Cubic Inch Displacement | 10.8 L/661 CI | 14.0 |
| Engine HP | 500 HP @1800 RPM | 525 @ 2100 RPM |
| Engine Torque | 1,550 lbs./ft. @1200 RPM | 1650 @ 1200 RPM |
| Governed Speed | 1800 RPM | 2100 RPM |
| Firing Order | 153624 | |
| Rear Axle Ratio | 4:30:1 | 4:30:1 |
| Alternator Amp Size | 200 Standard/270 All Electric | 200 AMP STD/270 All Electric |

**NOTE: This chart reflects product specifications available at the time of printing. Therefore any floor plans introduced thereafter may not be reflected in the chart. All other information contained throughout the manual will still apply.**

10 & 12.5 Kw

SERVICE INFORMATION

Refer to operator's manual for maintenance specifications and adjustments.

| | | |
|---|---|---|
| Air Cleaner | _ | 140-3071 |
| Oil Filter | _ | 187-1000 |
| Fuel Filter | _ | 149-2513 |
| Oil Capacity | _ 6.7 | Qts w/oil filter |
| API Designation | _ CE | |

| Temp | SAE Viscosity |
|---|---|
| 5° - 120°F | 15W-40 |
| (-13°F) - 68°F | 10W-30 |
| (-40°F) - 68°F | 5W-30 |

If service/parts are needed the Onan distributor can be located in the yellow pages under Generators-Electric. In the USA or Canada call 1-800-888-Onan

DC Fuss & Radiator Cap Under Cover.

*Generator Specifications* 060148

## FILTER & BELTS CHART

| Filters & Belts | Manufacturer | Part Number |
|---|---|---|
| **ISM 500** | | |
| Coolant Filter | Fleetguard | WF 2071 |
| Oil Filter | Fleetguard | LF 9001 |
| Fuel Filter (Primary) | Parker | 200200 (25 Micron) |
| Fuel Filter (Secondary) | Fleetguard | FS 1000 |
| Alternator Belt | Cummins | 3028521 |
| A/C Belt | Dayco | 3401283 |
| **Series 60** | | |
| Coolant Filter | Power Cool | 23516489 |
| Oil Filter x2 | Power Guard | 23527033 |
| Fuel Filter (Primary) | Power Guard | 23518481 |
| Fuel Filter (Secondary) | Power Guard | 23518482 |
| Alternator Belt | Detroit Diesel | 23520613 |
| A/C Belt | Same Belt for A/C and Alternator | |
| **Common Parts** | | |
| AquaHot Fuel Filter | Raycor | R2TRA000T (10 Micron) |
| Hydraulic Filter | Parker | IN HC 5720 (10 Micron) |
| Air Filter | Donaldson | P53744802 (MP2329) |
| Air Dryer Filter | Meritor Wabco | R950011 |
| Transmission Filter | Allison | 29526889 |
| A/C Filter Dryer | | MP 05400001* |
| *MP = Manufacturers Part Number | | |

**NOTE: Filter and belt numbers were correct at the time of printing. Verify the numbers at time of removal. The manufacturer will not be responsible for incorrect filter or belt usage. Please refer to the engine manufacturer's operating instructions for specific maintenance information.**

## METRIC/U.S. CONVERSION CHART

| U.S. Customary to Metric | | | Metric to U.S. Customary | |
|---|---|---|---|---|
| Measurement | Multiplied By | Equals/Measurement | Multiplied By | Equals |
| **Length** | | | | |
| inches (in) | 25.4 | millimeters (mm) | 0.03937 | inches (in) |
| inches (in) | 2.54 | centimeters (cm) | 0.3937 | inches (in) |
| feet (ft) | 0.3048 | meters (m) | 3.281 | feet (ft) |
| yards (yd) | 0.9144 | meters (m) | 1.094 | yards (yd) |
| miles (mi) | 1.609 | kilometers (km) | 0.6215 | miles (mi) |
| **Area** | | | | |
| square inches ($in^2$) | 645.16 | square millimeters ($m^2$) | 0.00155 | square inches ($in^2$) |
| square inches ($in^2$) | 6.452 | square centimeters ($cm^2$) | 0.15 | square inches ($in^2$) |
| square feet ($ft^2$) | 0.0929 | square meters ($m^2$) | 10.764 | square feet ($ft^2$) |
| **Volume** | | | | |
| cubic inches ($in^3$) | 16387.0 | cubic millimeters ($mm^3$) | 0.000061 | cubic inches ($in^3$) |
| cubic inches ($in^3$) | 16.387 | cubic centimeters ($cm^3$) | 0.06102 | cubic inches ($in^3$) |
| cubic inches ($in^3$) | 0.01639 | liters (L) | 61.024 | cubic inches ($in^3$) |
| fluid ounces (fl oz) | 29.54 | milliliters (mL) | 0.03381 | fluid ounces (fl oz) |
| pints (pt) | 0.47318 | liters (L) | 2.1134 | pints (pt) |
| quarts (qt) | 0.94635 | liters (L) | 1.0567 | quarts (qt) |
| gallons (gal) | 3.7854 | liters (L) | 0.2642 | gallons (gal) |
| cubic feet ($ft^3$) | 28.317 | liters (L) | 0.03531 | cubic feet ($ft^3$) |
| cubic feet ($ft^3$) | 0.02832 | cubic meters ($m^3$) | 35.315 | cubic feet ($ft^3$) |
| **Weight/Force** | | | | |
| ounces (av) (oz) | 28.35 | grams (g) | 0.03527 | ounces (av) (oz) |
| pounds (av) (lb) | 0.454 | kilograms (kg) | 2.205 | pounds (av) (lb) |
| U.S. tons (t) | 907.18 | kilograms (kg) | 0.001102 | U.S. tons (t) |
| U.S. tons (t) | 0.90718 | metric tons (t) | 1.1023 | U.S. tons (t) |
| **Torque/Work Force** | | | | |
| inch-pounds (lbf.in) | 11.298 | Newton-centimeters (N.cm) | 0.08851 | inch-pounds (lbf.in) |
| foot-pounds (lbf.ft) | 1.3558 | Newton-meters (N.m) | 0.7376 | foot-pounds (lbf.ft) |
| **Pressure/Vacuum** | | | | |
| inches of mercury (inHg) | 3.37685 | kiloPascals (kPa) | 0.29613 | inches of mercury (inHg) |
| pounds per square inch (psi) | 6.895 | kiloPascals (kPa) | 0.14503 | pounds per square inch (psi) |

| Measurement | Subtract | Divide By | Equals/Measurement | Multiply By | Add | Equals |
|---|---|---|---|---|---|---|
| **Temperature** | | | | | | |
| degrees Fahrenheit (ºF) | 32 | 1.8 | degrees Celsius (ºC) | 1.8 | 32 | degrees Fahrenheit (ºF) |

## MAINTENANCE RECORDS

After scheduled services are performed, record the date, odometer reading and who performed the service in the boxes provided after the maintenance interval. Any additional information from "Owner Checks and Services" or "Periodic Maintenance" can be added on the following record pages. **In addition, retain all maintenance receipts.** The owner information portfolio is a convenient place to store them.

### LUBRICATION SERVICE RECORD

KEY TO SERVICES

A -- Lubrication & Inspection
A1 -- Motor Oil & Filter Change
A2 -- Transmission Oil Change
A3 -- Drive Axle Oil Change
A4 -- Wheel Bearing Service
B -- Prescribed Service
C -- Prescribed Service
D -- Prescribed Service
E -- Prescribed Service

| MILEAGE | SERVICES | | | | | | | | | JOB PERFORMED | | MILEAGE | SERVICES | | | | | | | | | JOB PERFORMED | |
|---|---|---|---|---|---|---|---|---|---|---|---|---|---|---|---|---|---|---|---|---|---|---|---|
| | A | A1 | A2 | A3 | A4 | B | C | D | E | DATE | BY | | A | A1 | A2 | A3 | A4 | B | C | D | E | DATE | BY |
| 1 | | | | | | | | | | | | 31 | | | | | | | | | | | |
| 2 | | | | | | | | | | | | 32 | | | | | | | | | | | |
| 3 | | | | | | | | | | | | 33 | | | | | | | | | | | |
| 4 | | | | | | | | | | | | 34 | | | | | | | | | | | |
| 5 | | | | | | | | | | | | 35 | | | | | | | | | | | |
| 6 | | | | | | | | | | | | 36 | | | | | | | | | | | |
| 7 | | | | | | | | | | | | 37 | | | | | | | | | | | |
| 8 | | | | | | | | | | | | 38 | | | | | | | | | | | |
| 9 | | | | | | | | | | | | 39 | | | | | | | | | | | |
| 10 | | | | | | | | | | | | 40 | | | | | | | | | | | |
| 11 | | | | | | | | | | | | 41 | | | | | | | | | | | |
| 12 | | | | | | | | | | | | 42 | | | | | | | | | | | |
| 13 | | | | | | | | | | | | 43 | | | | | | | | | | | |
| 14 | | | | | | | | | | | | 44 | | | | | | | | | | | |
| 15 | | | | | | | | | | | | 45 | | | | | | | | | | | |
| 16 | | | | | | | | | | | | 46 | | | | | | | | | | | |
| 17 | | | | | | | | | | | | 47 | | | | | | | | | | | |
| 18 | | | | | | | | | | | | 48 | | | | | | | | | | | |
| 19 | | | | | | | | | | | | 49 | | | | | | | | | | | |
| 20 | | | | | | | | | | | | 50 | | | | | | | | | | | |
| 21 | | | | | | | | | | | | 51 | | | | | | | | | | | |
| 22 | | | | | | | | | | | | 52 | | | | | | | | | | | |
| 23 | | | | | | | | | | | | 53 | | | | | | | | | | | |
| 24 | | | | | | | | | | | | 54 | | | | | | | | | | | |
| 25 | | | | | | | | | | | | 55 | | | | | | | | | | | |
| 26 | | | | | | | | | | | | 56 | | | | | | | | | | | |
| 27 | | | | | | | | | | | | 57 | | | | | | | | | | | |
| 28 | | | | | | | | | | | | 58 | | | | | | | | | | | |
| 29 | | | | | | | | | | | | 59 | | | | | | | | | | | |
| 30 | | | | | | | | | | | | 60 | | | | | | | | | | | |

# LUBRICATION SERVICE RECORD

KEY TO SERVICES

A -- Lubrication & Inspection
A1 -- Motor Oil & Filter Change
A2 -- Transmission Oil Change
A3 -- Drive Axle Oil Change
A4 -- Wheel Bearing Service
B -- Prescribed Service
C -- Prescribed Service
D -- Prescribed Service
E -- Prescribed Service

| MILEAGE | SERVICES | | | | | | | | | JOB PERFORMED | |
|---|---|---|---|---|---|---|---|---|---|---|---|
| | A | A1 | A2 | A3 | A4 | B | C | D | E | DATE | BY |
| 1 | | | | | | | | | | | |
| 2 | | | | | | | | | | | |
| 3 | | | | | | | | | | | |
| 4 | | | | | | | | | | | |
| 5 | | | | | | | | | | | |
| 6 | | | | | | | | | | | |
| 7 | | | | | | | | | | | |
| 8 | | | | | | | | | | | |
| 9 | | | | | | | | | | | |
| 10 | | | | | | | | | | | |
| 11 | | | | | | | | | | | |
| 12 | | | | | | | | | | | |
| 13 | | | | | | | | | | | |
| 14 | | | | | | | | | | | |
| 15 | | | | | | | | | | | |
| 16 | | | | | | | | | | | |
| 17 | | | | | | | | | | | |
| 18 | | | | | | | | | | | |
| 19 | | | | | | | | | | | |
| 20 | | | | | | | | | | | |
| 21 | | | | | | | | | | | |
| 22 | | | | | | | | | | | |
| 23 | | | | | | | | | | | |
| 24 | | | | | | | | | | | |
| 25 | | | | | | | | | | | |
| 26 | | | | | | | | | | | |
| 27 | | | | | | | | | | | |
| 28 | | | | | | | | | | | |
| 29 | | | | | | | | | | | |
| 30 | | | | | | | | | | | |
| 31 | | | | | | | | | | | |
| 32 | | | | | | | | | | | |
| 33 | | | | | | | | | | | |
| 34 | | | | | | | | | | | |
| 35 | | | | | | | | | | | |
| 36 | | | | | | | | | | | |
| 37 | | | | | | | | | | | |
| 38 | | | | | | | | | | | |
| 39 | | | | | | | | | | | |
| 40 | | | | | | | | | | | |
| 41 | | | | | | | | | | | |
| 42 | | | | | | | | | | | |
| 43 | | | | | | | | | | | |
| 44 | | | | | | | | | | | |
| 45 | | | | | | | | | | | |
| 46 | | | | | | | | | | | |
| 47 | | | | | | | | | | | |
| 48 | | | | | | | | | | | |
| 49 | | | | | | | | | | | |
| 50 | | | | | | | | | | | |

## BATTERY RECORD

| MAKE | TYPE | DATE INSTALLED | REPAIRS | DATE REPLACED | SERVICE | |
|---|---|---|---|---|---|---|
| | | | | | MONTHS | MILES |
| | | | | | | |
| | | | | | | |
| | | | | | | |
| | | | | | | |
| | | | | | | |
| | | | | | | |
| | | | | | | |
| | | | | | | |
| | | | | | | |
| | | | | | | |
| | | | | | | |
| | | | | | | |
| | | | | | | |
| | | | | | | |
| | | | | | | |
| | | | | | | |
| | | | | | | |
| | | | | | | |
| | | | | | | |
| | | | | | | |
| | | | | | | |
| | | | | | | |
| | | | | | | |
| | | | | | | |
| | | | | | | |
| | | | | | | |
| | | | | | | |

## TIRE RECORD

| MAKE | TYPE | PLY | DATE INSTALLED | REPAIRS | DATE REPLACED | SERVICE | |
|---|---|---|---|---|---|---|---|
| | | | | | | MONTHS | MILES |
| | | | | | | | |
| | | | | | | | |
| | | | | | | | |
| | | | | | | | |
| | | | | | | | |
| | | | | | | | |
| | | | | | | | |

10

# TECHNICAL PUBLICATIONS

**Manager** Vance Buell
**Editing** Technical Publications

## OPERATIONS

### *TECHNICAL WRITERS*

Robert Buckholtz - OR
William Birch - OR
John Banks - Or
James Magee - OR
Fran Weisenstein - IN

### *CREATIVE DESIGNERS*

Kelly Stroble - OR
Aaron Graham - OR
Julie Slagle - IN

### *TECHNICAL ILLUSTRATIONS*

Judy Pressler, Kelly Stroble, Rena Koffler, Aaron Graham
Wes Bogan

**Navigator 2004 Technical Writer** John Banks
**Navigator 2004 Layout** Aaron Graham
**Navigator 2004 Cover Design** Kelly Stroble

### *PRINTING*

Holiday Graphics - IN

## ONLINE

**CORPORATE SITE**
www.monaco-online.com

**ONLINE TOURS**
www.monaco-tours.com

# Index

# A


**ABS/ATC System (Anti-lock Brakes) . . . . . 483**
**Air Conditioning - Roof . . . . . 209**
Auto Temp Start . . . . . 212
Heat Pump . . . . . 211
Operation . . . . . 210
Return Air Filters . . . . . 211
**Air Dryer . . . . . 474**
Air Dryer Cycle . . . . . 476
Desiccant Cartridge . . . . . 475
Desiccant-Type Air Dryer . . . . . 476
**Air Filter . . . . . 558**
Air Filter Minder . . . . . 558
Changing the Filter . . . . . 558
**Air Springs . . . . . 477**
Air Bag Inspections - Checklist . . . . . 477
**Air Supply System . . . . . 471**
Air Coupler - Universal . . . . . 472
Air Governor . . . . . 472
Air Storage Tanks . . . . . 472
Air System - Charging (External) . . . . . 473
**Aladdin™ Engine Display . . . . . 462**
**Aladdin™ System . . . . . 311**
Measurements & Calibration (Water Tanks) . . . 311
**All Electric (Opt) . . . . . 417**
Alternator . . . . . 422
House Batteries . . . . . 420
Main Battery Disconnect . . . . . 421
Meters . . . . . 418
Overview . . . . . 417
Remotes . . . . . 418
Wiring Systems Interfaced . . . . . 422
**Alternator . . . . . 432**
Alternator Testing Procedure . . . . . 433
**Appliances - Introduction . . . . . 175**
**Aqua-Hot (Opt) . . . . . 221**
Aqua-Hot Overall View . . . . . 225
Bay Thermostat . . . . . 223
Coolant Tank . . . . . 223
Filter/Water Separator . . . . . 224
**Automatic Appliance Selector . . . . . 204**
**Awnings . . . . . 258**
Carefree Automatic Awning (Opt) . . . . . 266
Front Door Awning . . . . . 258
Girard Awning (Opt) . . . . . 262
Patio Awning . . . . . 259
Slide - Out Awning . . . . . 268
Slide - Out Cover . . . . . 271
Tips . . . . . 265
Window Awning - Girard . . . . . 270


# B


**Backing Up A Motorhome . . . . . 59**
**Battery . . . . . 404**
Battery Charge Time & Consumption Rate . . . . 410
Battery Maintenance . . . . . 406
Battery Trays . . . . . 405
Battery Voltage & Current . . . . . 409
Deep Cycle Battery . . . . . 405
How It Works . . . . . 404
Reasons Why Batteries Fail . . . . . 408
Starting Battery . . . . . 404
Testing the Battery . . . . . 406
**Battery - Chassis . . . . . 428**
**Battery Cut-Off Switch . . . . . 365**
**Battery Disconnect - Chassis . . . . . 427**
**Battery Disconnect - House . . . . . 364**
**Battery Specifications Chart - Chassis . . . . . 429**
**Battery Specifications Chart - House . . . . . 412**
**Bay Freezer (Opt) . . . . . 189**
**Brake - Auxiliary . . . . . 539**
**Brake - Engine . . . . . 539**
**Brake Systems . . . . . 480**
Air Brakes . . . . . 480
Brake Adjustment/Slack Adjuster . . . . . 481
Brake Systems - Back-Up . . . . . 482
Park & Emergency Brake Systems . . . . . 480
**Breaking Camp . . . . . 68**
**Bulb Usage - Interior . . . . . 416**
**Bulb Usage Chart - Exterior . . . . . 463**


# C


**Carbon Monoxide Detector . . . . . 112**
Alarm . . . . . 114
Cleaning . . . . . 115
Operation . . . . . 114
Testing . . . . . 115
Troubleshooting . . . . . 115
**Ceiling . . . . . 148**
Ceiling Mirror . . . . . 148
**Cell Phone Antenna . . . . . 290**
**Charge Air Cooler . . . . . 537**
**Chassis - Introduction . . . . . 469**

**Citizen Band Radio (CB) . . . . . 286**
CB Components . . . . . 286
Operating Procedures . . . . . 287
Standing Wave Radio . . . . . 289
Transmission . . . . . 288
Weather Alerts . . . . . 290
**Cold Weather Conditions . . . . . 331**
Cold Weather Storage . . . . . 331
**Cold Weather Starting . . . . . 529**
Detroit . . . . . 529
**Console . . . . . 438**
Leveling Controls . . . . . 439
Parking Brake . . . . . 439
Transmission Shift Selector . . . . . 438
**Cooktop . . . . . 204**
Care & Cleaning . . . . . 206
**Cooktop - All Electric (Opt) . . . . . 207**
**Coolant . . . . . 530**
Coolant Additives - SCA (Cummins) . . . . . 533
Coolant Additives - SCA (DDC Series 60) . . . . 534
Maintenance Procedures . . . . . 536
**Countertops . . . . . 152**
Solid Surface . . . . . 152
**Customer Relations . . . . . 18**

## D

**Dash . . . . . 440**
Gauges . . . . . 442
Indicator Lamps . . . . . 440
Switches . . . . . 444
**Dash Air Conditioner & Heater Controls . . . . . 449**
About Refrigerants . . . . . 455
**Diagnostic Plug Location . . . . . 460**
Diagnostic Bracket (Engine) . . . . . 461
**Dinette Bed Conversion (Opt) . . . . . 276**
**Dishwasher (Opt) . . . . . 232**
**Distribution Panel - House 110 . . . . . 399**
Circuit Breaker . . . . . 400
**Distribution Panel - House 12 Volt . . . . . 402**
**Door - Sliding . . . . . 274**
**Drive Axle & Drive Shaft . . . . . 496**
Lubrication Maintenance . . . . . 499
U-Joint Angles, Phasing & Driveline Balance . 499
**Driving & Safety . . . . . 41**
Driving Tips . . . . . 46
Familiarize Yourself . . . . . 41
Inspections . . . . . 41
Mirror Adjust (Manually) . . . . . 41
Safety Seat Belts . . . . . 43
**Dry Camping . . . . . 63**

## E

**EGR Filter (Detroit Only) . . . . . 559**
**Egress Exit Window . . . . . 116**
**Electric Baseboard Heater (Opt) . . . . . 226**
**Electrical Chassis - Introduction . . . . . 427**
**Emergency Procedures - Roadside . . . . . 70**
In Case of Flat Tire . . . . . 70
Jump Starting . . . . . 73
Light - Retractable . . . . . 72
Low Fuel - Priming the Fuel System . . . . . 72
OnStar® System (Optional) . . . . . 71
**Engine - General Information . . . . . 517**
**Engine “No Start” - Flow Chart . . . . . 464**
**Engine Diagram . . . . . 518**
Cummins - I.S.M . . . . . 520
Detroit Diesel (Opt) . . . . . 518
**Engine Oil . . . . . 524**
Cold Weather - Oil . . . . . 528
Cummins Engine Requirements . . . . . 524
Detroit Engine Requirements . . . . . 525
Oil Maintenance . . . . . 527
**Engine Shutdown . . . . . 530**
Extended Engine Shutdown . . . . . 530
**Entertainment Systems . . . . . 291**
Hook-ups - TV Cable, Computer & Television . 291
Television (Front) w/Lock-Out Feature . . . . . 291
**Entry Door . . . . . 242**
Door Bell . . . . . 244
Latch Adjustments . . . . . 242
Screen Door - Adjusting . . . . . 243
Screen Door - Changing the Glass . . . . . 243
Screen Door - Removing the Screen . . . . . 243
**Entry Step . . . . . 237**
Adjustments . . . . . 241
Operation . . . . . 237
Stepwell . . . . . 240
Tips . . . . . 238
**Equipment - Introduction . . . . . 237**

**Exterior Care** . . . . . **127**
Aluminum Wheels . . . . . 129
Bright Metal . . . . . 130
Corrosion . . . . . 127
Drying . . . . . 128
Tire Care . . . . . 129
Washing . . . . . 127
Waxing . . . . . 128
**Exterior Maintenance** . . . . . **130**
Roof Care & Seal Inspections . . . . . 131

# F

**Fabrics** . . . . . **134**
Fabric Cleaning Codes . . . . . 134
Fabric Specifications Charts . . . . . 136
Leather . . . . . .141
Vinyl . . . . . .139
Ultra-Leather . . . . . .143
Ultrasuede® . . . . . .142
**Fans** . . . . . **272**
Bathroom Fan . . . . . 272
Exhaust Fan . . . . . 272
**Faucets** . . . . . **322**
**Filter & Belts Chart** . . . . . **567**
**Fire Extinguisher** . . . . . **116**
**Floors** . . . . . **144**
Carpet Cleaning . . . . . 144
Tile Floors . . . . . 145
**Front Axle** . . . . . **487**
Alignment . . . . . 488
Center Link . . . . . 493
Control Arm Bushings . . . . . 494
Drag Link . . . . . 493
Lubrication Maintenance Safety . . . . . 491
Steering Column . . . . . 492
Steering Components . . . . . 491
Steering Spindles . . . . . 494
**Fuel System** . . . . . **547**
Fuel Filters . . . . . 550
Fuel Lines & Hoses . . . . . 549
Fuel Requirements . . . . . 547
Fuel Sender . . . . . 548
Fuel Tank . . . . . 547
Rear Start Switches . . . . . 550
**Furnace** . . . . . **214**
If the Furnace Fails to Light . . . . . 215
Operation . . . . . 214
Tips . . . . . 215
Using the Furnace . . . . . 215
**Fuses** . . . . . **402**
Knowing When to Say When . . . . . 403
Tools of the Trade . . . . . 403
**Fuses & Circuits** . . . . . **430**
Electrical Panels . . . . . 430
Rear Start Box . . . . . 431

# G

**General Lubrication Maintenance** . . . . . **162**
Greasing . . . . . 164
Lubricant Classification . . . . . 162
Lubricants . . . . . 162
Proper Fluid Disposal . . . . . 163
**Generator - 240 AC** . . . . . **371**
Generator Exercise . . . . . 375
Generator Fuel . . . . . 374
Powering the Equipment . . . . . 373
Pre-start Checks . . . . . 372
Resetting the Circuit Breaker . . . . . 374
Starting the Generator . . . . . 372
Stopping the Generator . . . . . 373
**Generator - Auto Gen Start (RC7 GS)** . . . . . **375**
**GFCI Breakers & Outlets** . . . . . **401**
**Glossary of Terms** . . . . . **24**

# H

**Hitch** . . . . . **55**
Tow Plug Connection . . . . . .56
Using The Rear Receiver . . . . . 55
**Home Theatre Components** . . . . . **292**
Flat Screen LCD - Front TV . . . . . 292
Plasma Front TV (Opt) . . . . . 292
**House Electrical - Introduction** . . . . . **363**
Generator . . . . . 363
Inverter/Converter . . . . . 364
Shore Power . . . . . 363

**Hydraulic System . . . . . 553**
Electric Override (ISM only) . . . . . 556
Fan Motor . . . . . 556
Hydraulic Cooler . . . . . 554
Hydraulic Fan System . . . . . 555
Hydraulic Filter . . . . . 557
Hydraulic Pump . . . . . 554
Hydraulic Reservoir . . . . . 558
Switching Valve . . . . . 556
Thermovalve . . . . . 555

## I, J

**Icemaker - Stand-Alone (Opt) . . . . . 187**
Care & Cleaning . . . . . 188
**InstaHot . . . . . 191**
**Interior Care . . . . . 133**
Cockpit . . . . . 133
**Introduction . . . . . 17**
**Inverter . . . . . 378**
Battery Temperature Sensor . . . . . 381
Battery Charging with the Inverter . . . . . 380
Main Menu Display . . . . . 381
Meters Menu . . . . . 382
Pass-Through AC Power . . . . . 381
Programming the Inverter . . . . . 383
RC7 GS Remote . . . . . 379
Re-booting the Inverter . . . . . 387
Stand-By Operation . . . . . 380
**Inverter - Sine Wave (Opt) . . . . . 388**
Automatic Generator Start Programming . . . . . 394
Battery Charging . . . . . 392
Battery Temperature Sensor . . . . . 393
Inverter Facts . . . . . 398
Meters Menu . . . . . 393
Pass-Through Power . . . . . 393
Programming & Resetting . . . . . 391
Remote . . . . . 389
Stand-by Operation . . . . . 392

## K

**Keyless Entry . . . . . 246**
Bay Doors - Unlock . . . . . 249

## L

**Leveling - Air . . . . . 510**
**Leveling - Hydraulic (Opt) . . . . . 502**
Automatic Leveling . . . . . 506
Maintenance . . . . . 509
Manual Leveling . . . . . 506
Manual Retract Valves . . . . . 508
Retracting Leveling Jacks . . . . . 507
**Lights - Interior Halogen . . . . . 416**
**LP-Gas Consumption . . . . . 356**
**LP-Gas Detector . . . . . 110, 344**
Alarm . . . . . 111, 346
Maintenance . . . . . 112, 347
Testing . . . . . 111, 345
**Lp-Gas Emergency Procedures - Checklist . . . . 347**
**LP-Gas Fundamentals . . . . . 350**
**LP-Gas Hose Inspection . . . . . 355**
**LP-Gas Regulator . . . . . 352**
**LP-Gas Safety Tips . . . . . 358**
**LP-Gas System . . . . . 343**
**LP-Gas Tank . . . . . 348**
Tank Capacity . . . . . 348
**LP-Gas Tank - Measurement . . . . . 347**
**Lubrication Chart . . . . . 560, 562**
Cummins . . . . . 560
Detroit Diesel Series 60 . . . . . 562

## M, N

**Maintenance Records . . . . . 569**
**Metric/U.S. Conversion Chart . . . . . 568**
**Microwave/ Convection Oven . . . . . 193**
Charcoal Filter . . . . . 202
Convection Cooking . . . . . 199
Fan . . . . . 202
Maintenance . . . . . 202
Microwave Cooking . . . . . 197
Operation . . . . . 195
Tips . . . . . 201
**Mold & Mildew . . . . . 156**

## O


**Owner's Record . . . . . 21**
Insurance . . . . . 23
Personal Property . . . . . 22
Serial Numbers . . . . . 21


## P, Q


**Parts - Common solenoids & senders . . . . . 564**
**Pest Control . . . . . 158**
**Plumbing Manifold . . . . . 315**
**Pressure Accumulator Tank . . . . . 318**
**Pre-trip Preparations - Checklist . . . . . 52**
**Privacy Drapery Electric (Opt) . . . . . 273**


## R


**Radio - Bedroom . . . . . 293**
Bedroom TV . . . . . 294
DVD Player . . . . . 295
Operating the Components . . . . . 300
Plasma TV Operation . . . . . 296
Shore Cable/Roof Antenna Selector Switch . . . 295
VCR (Plasma TV Only) . . . . . 299
**Radio & Navigation System (Opt) . . . . . 279**
Back-Up Camera Operation . . . . . 281
Navigation System . . . . . 282
Operation . . . . . 280
Radio Operation . . . . . 281
**Radio, Navigation & Aladdin™ System . . . . . 278**
**Rear View System . . . . . 57**
See Vision (Opt) . . . . . 58
**Refrigerator . . . . . 175**
Air in Propane Gas Supply Lines . . . . . 183
Control Panel . . . . . 177
Cooling Unit Fans . . . . . 182
Doors . . . . . 182
Icemaker . . . . . 181
Interior Light . . . . . 183
Operation Specifics . . . . . 176
Refrigerator Alarm . . . . . 182
Service . . . . . 182
Storage . . . . . 184
Water Line Heater . . . . . 181
**Refrigerator - Residential . . . . . 185**
**Reporting Safety Defects . . . . . 18**
**Ride Height Valves . . . . . 478**
Adjusting Ride Height . . . . . 479


## S


**Safe . . . . . 123**
**Safety Symbol Legend . . . . . .15**
**Seat Controls . . . . . 274**
Seat Swivel . . . . . 275
**Security System (Opt) . . . . . 117**
**Service Center . . . . . 337**
**Service Suggestions . . . . . 19**
Be Reasonable With Your Requests . . . . . 20
Inspect the Work Properly . . . . . 20
No Looking Over the Technician's Shoulder . . . 20
Prepare a List . . . . . 20
Prepare for the Appointment . . . . . 20
**Set-up Procedures - Checklist . . . . . 61**
**Shock Absorber . . . . . 502**
**Shore Power Hook-up . . . . . 365**
AC Volt & Amp Meter . . . . . 370
Power Cord Reel . . . . . 369
**Shower . . . . . 147**
**Slide-Out Operation . . . . . 250**
Bedroom Slide-Out . . . . . 255
Main Room Slide-Out . . . . . 251
Manual Override - Bedroom Slide-out . . . . . 256
**Smoke Detector . . . . . 108**
Maintenance . . . . . 109
Operation . . . . . 109
Testing . . . . . 109
Troubleshooting . . . . . .109
**Soap Dispenser - Liquid . . . . . 323**
**Sofa Bed Conversion . . . . . 275**
**Solar Panel . . . . . 413**
Charge Controller Features . . . . . 414
Solar Panel Care . . . . . 415
**Specifications - Dimensions Chart . . . . . 108, 566**
**Starting Procedure . . . . . 522**
Cold Weather Starting . . . . . 522
Normal Starting . . . . . 522
**Steering Column & Smart Wheel . . . . . 434**
Smart Wheel Operation . . . . . 435
Tilt & Telescope . . . . . 437
Wiper Function . . . . . 435
**Steering Gear . . . . . 494**


INDEX

**Storage** . . . . . **165**
Long Term . . . . . 166
Removal From Storage . . . . . 170
Short Term . . . . . 165
Winter Storage - Checklist . . . . . 169
**Storage - Under bed** . . . . . **276**
**Super Slide (Opt)** . . . . . **277**
**Survey** . . . . . **35**
**Systems Control Center** . . . . . **459**

## T

**Tag Axle** . . . . . **500**
Oil Lube Intervals . . . . . 501
**Taking Delivery** . . . . . **18**
Customer Responsibilities . . . . . 19
Dealer Responsibilities . . . . . 19
Holiday Rambler Responsibilities . . . . . 18
**Tank Capacities - Chart** . . . . . **336**
**Tires** . . . . . **78**
Air Pressure Checklist . . . . . 84
Importance of Air Pressure . . . . . 78
Inspecting & Pressure . . . . . 82
Storage of Tires - Long Term . . . . . 89
Supporting When Leveling . . . . . 85
Tire Chart - Goodyear . . . . . 80
Tire Chart - Michelin . . . . . 81
Tire Pressure Inflation Guideline . . . . . 79
Tire Rotation . . . . . 86
Tire Vibration . . . . . 86
Tire/Wheel Care . . . . . 87
Tread . . . . . 86
**Toilet** . . . . . **328**
Cleaning & Maintenance . . . . . 330
Drain Traps & Auto Vents . . . . . 330
**Towing Procedures** . . . . . **76**
Brake - Disabling Parking Brake . . . . . 77
**Transfer Switch** . . . . . **370**
**Transmission** . . . . . **540**
Periodic Inspections . . . . . 543
Shift Selector . . . . . 540
Transmission Check Light . . . . . 542
**Transmission Lubricating Fluid** . . . . . **545**
Fluid Levels - Cold Check . . . . . 545
Fluid Levels - Hot Checks . . . . . 546

## U

**Universal Remotes** . . . . . **306**

## V

**Vendor List** . . . . . **28**
**Views** . . . . . **106**
Curbside . . . . . 107
Front . . . . . 106
Rear . . . . . 106
Roadside . . . . . 107

## W, X, Y, Z

**Wall Coverings** . . . . . **148**
**Wall Thermostat** . . . . . **208**
**Warranty - Limited: 2004 Navigator** . . . . . **1**
Disclaimer of Consequential & Incidental Damages . 4
Events Discharging Obligation Under Warranty . . 4
How to Get Service . . . . . 3
Legal Remedies . . . . . 5
Limitations of Implied Warranties . . . . . 2
What the Warranty Covers . . . . . 2
What the Warranty Does Not Cover . . . . . 4
What We Will Do to Correct Problems . . . . . 2
**Warranty - Limited: 2004 Roadmaster Chassis** . . **6**
Disclaimer of Consequential & Incidental Damages . 9
Events Discharging Obligation Under Warranty . . 8
How to Get Service . . . . . 8
Legal Remedies . . . . . 9
Limitations of Implied Warranties . . . . . 6
What the Warranty Covers . . . . . 7
What the Warranty Does Not Cover . . . . . 8
What We Will Do to Correct Problems . . . . . 7
**Warranty Information File** . . . . . **10**
**Warranty Transfer Application - Limited** . . . . . **37**
**Washer - Dryer** . . . . . **228**
Test Procedure . . . . . 228
Washer-Dryer Maintenance . . . . . 230
Winterizing the Washer-Dryer . . . . . 231
**Washer-Dryer Prepared** . . . . . **227**

**Waste Water Systems . . . . . 323**
Black Tank Flush . . . . . 326
Proper Waste Disposal . . . . . 323
Waste Drain & Sewage Tanks . . . . . 324
Waste Drain Hose . . . . . 325
What Not to Put in Waste Holding Tanks . . . . . 323
What to Put in Holding Tanks - Black Water Tank 326
What to Put in Holding Tanks - Grey Water Tank . 326
**Water . . . . . .313**
City Water Hook-up . . . . . 313
Fresh Fill . . . . . .313
**Water Dispenser - Hot (Opt) . . . . . 191**
**Water Filters . . . . . 318**
Galley Filter . . . . . 320
**Water Heater . . . . . 216**
Before Using the Water Heater . . . . . 216
Burner Compartment . . . . . 219
Draining & Storage . . . . . 220
Pressure - Temperature Relief Valve . . . . . 219
Tips . . . . . 220
Troubleshooting . . . . . 220
Water Heater Bypass System . . . . . 218
**Water Hose Reel . . . . . 314**
**Water Pump . . . . . 316**
Water Pump Troubleshooting . . . . . 317
**Water Pump Diagram . . . . . 338**
**Water Systems . . . . . .321**
Disinfecting Fresh Water . . . . . .321
Troubleshooting . . . . . .321
**Water Systems Diagram . . . . . 339**
**Water Systems - Introduction . . . . . 311**
**Water Tank . . . . . 315**
Fresh Gravity Fill . . . . . 315
**Weighing the Motorhome . . . . . 90**
Six Point Weighing (Example) . . . . . 96
Weight Label (Example) . . . . . 95
**Window Treatments . . . . . 154**
Day/Night Shades . . . . . 155
Mini blinds . . . . . 154
**Windows . . . . . 153**
Condensation . . . . . 153
**Winterization . . . . . 331**
Using Air Pressure . . . . . 332
Using Nontoxic Antifreeze . . . . . 334
**Wood Care . . . . . 150**